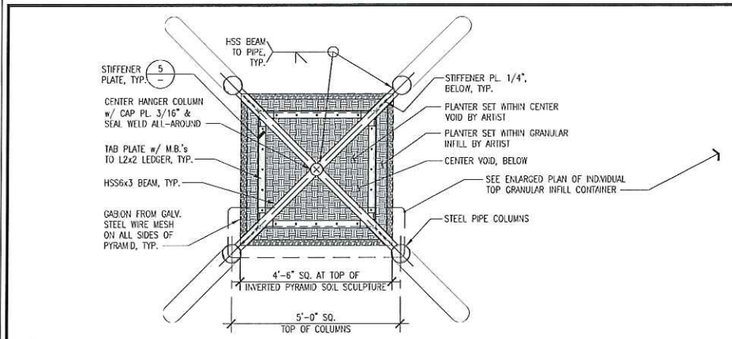

1 ENTRY SOIL SCULPTURE - PLAN AT TOP

SCALE: 1/2"=1' 0"

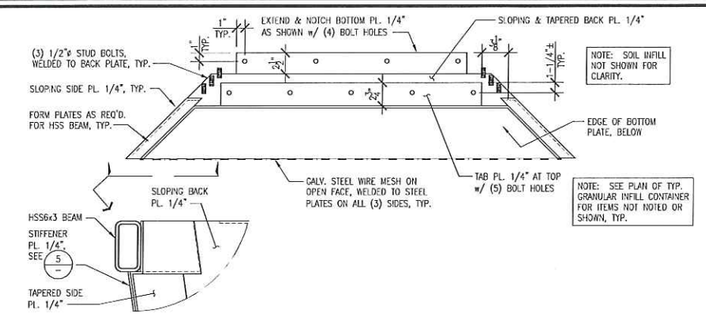

INFILL CONTAINER NOTCHED AT HSS BEAM

3 ENLARGED PLAN OF INDIVIDUAL TOP GRANULAR INFILL CONTAINER

SCALE: 1-1/2"=1' 0"

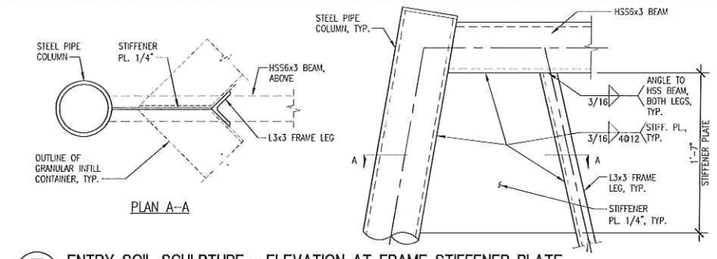

5 ENTRY SOIL SCULPTURE - ELEVATION AT FRAME STIFFENER PLATE

SCALE: 1-1/2"=1' 0"

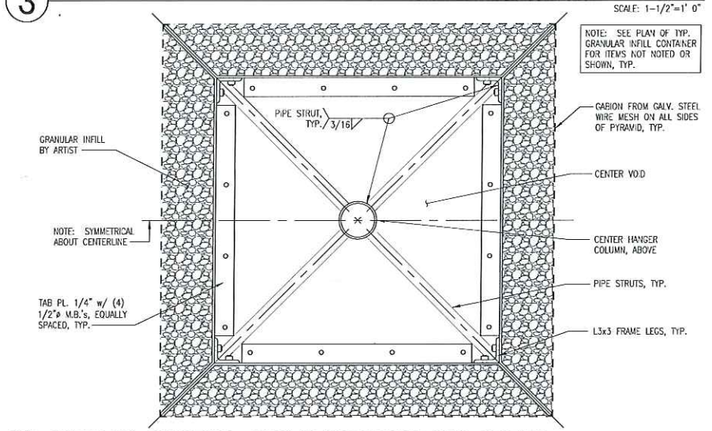

9 ENTRY SOIL SCULPTURE - PLAN AT UPPER-MIDDLE INFILL SECTION

SCALE: 1-1/2"=1' 0"

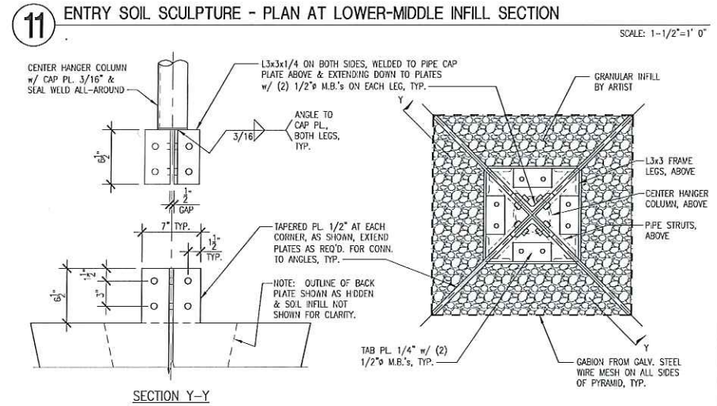

11 ENTRY SOIL SCULPTURE - PLAN AT LOWER-MIDDLE INFILL SECTION

SCALE: 1-1/2"=1' 0"

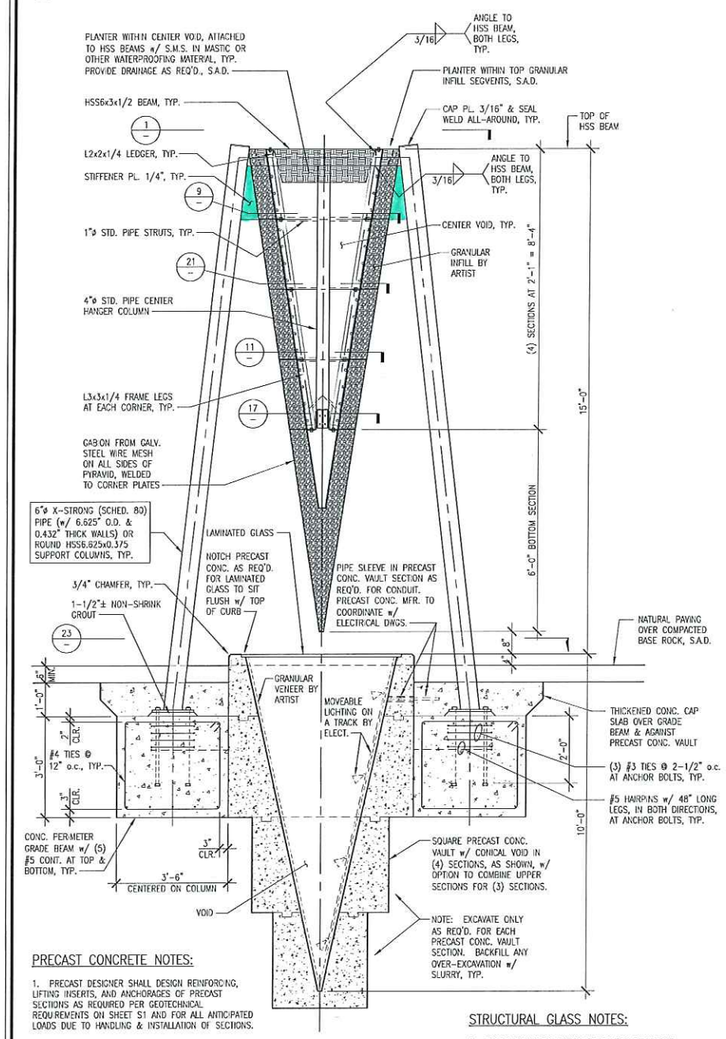

PRECAST CONCRETE NOTES:

1. PRECAST DESIGNER SHALL DESIGN REINFORCING, LIFTING INSERTS, AND ANCHORAGES OF PRECAST SECTIONS AS REQUIRED PER GEOTECHNICAL REQUIREMENTS ON SHEET S1 AND FOR ALL ANTICIPATED LOADS DUE TO HANDLING & INSTALLATION OF SECTIONS.
2. JOINTS OF THE PRECAST SECTIONS SHALL BE SEALED WITH MASTIC OR GROUT.
3. LIFTING HOLES SHALL BE FILLED WITH CONCRETE PLUGS AND MASTIC AFTER SECTIONS ARE IN PLACE.

STRUCTURAL GLASS NOTES:

1. GLASS SHALL BE LAMINATED SAFETY GLASS AND SHALL CONFORM TO CHAPTER 24 OF THE 2013 CALIFORNIA BUILDING CODE.
2. GLASS SHALL BE DESIGNED FOR MIN. 100 PSF LIVE LOAD, WITH A DEFLECTION LIMIT OF L/500.

19 ENTRY SOIL SCULPTURE - SECTION

SCALE: 1/2"=1' 0"

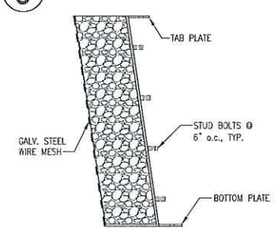

SECTION X-X

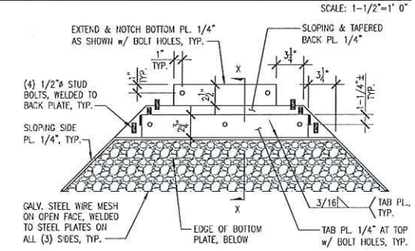

15 PLAN OF TYP. GRANULAR INFILL CONTAINER

SCALE: 1-1/2"=1' 0"

17 ENTRY SOIL SCULPTURE - PLAN AT BOTTOM INFILL SECTION

SCALE: 1-1/2"=1' 0"

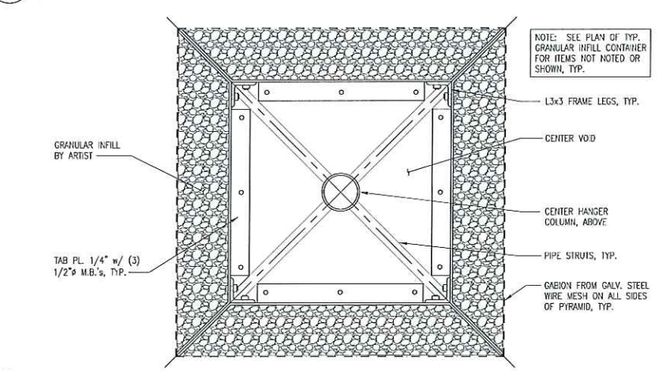

21 ENTRY SOIL SCULPTURE - PLAN AT TOP

SCALE: 1/2"=1' 0"

23 ENTRY SOIL SCULPTURE - FOUNDATION PLAN

SCALE: 1/2"=1' 0"

akh STRUCTURAL ENGINEERS, INC.
1505 MERIDIAN AVE., SUITE B
SAN JOSE, CALIFORNIA 95125
WEBSITE: WWW.AKHSE.COM
PHONE: (408) 978-1970
FAX: (408) 267-7919

DRAWN BY: SRW, TDH
CHECKED BY: TDH
AKH JOB NO. M15-074

REGISTERED PROFESSIONAL ENGINEER STEPHEN R. WARD No. S4937 EXP. 6/30/17 STRUCTURAL STATE OF CALIFORNIA

DRAWING NOT VALID FOR CONSTRUCTION WITHOUT SEAL AND ORIGINAL "WET" SIGNATURE
COPYRIGHT © 2015 AKH STRUCTURAL ENGINEERS, Inc.

ISSUES/REVISIONS:

San Francisco Dept. of Public Works
ENTRY SCULPTURE
SUNOL WATERSHED CENTER
Mark Brest van Kempen, Artist

SHEET CONTENTS:
ENTRY SOIL SCULPTURE PLANS, SECTIONS, DETAILS

DATE:
03 NOV 2015

SCALE:
AS NOTED

SHEET NO.
S2
OF 2 SHEETS