GOLDEN GATE PARK GOLF COURSE CLUBHOUSE

A RECREATION AND PARK COMMISSION PROJECT

95% CD Set
November 2020

BUREAU OF ARCHITECTURE

SAN FRANCISCO PUBLIC WORKS

Ron Alameida - City Architect
Julia Laue - Principal Architect / Bureau Manager
49 S Van Ness Ave., Suite 1100, San Francisco, CA 94103
Phone (628)271-2865

Golden Gate Park Golf Clubhouse

970 47th Avenue
San Francisco, CA 94121

Consultant

Bureau Mgr. Julia Laue
Section Mgr.
Technical Mgr. Vito Vanoni

95% CD 11.16.2020

No.	Date	Revisions

PM Noah Levy
PA Paul DeFreitas
Drawn Author
Checked Checker

NOT FOR CONSTRUCTION

Drawing Title

COVER SHEET

Sheet No. G0.0
Scale: 3" = 1'-0"
Project No. 1804

C:\Users\eharriso\Documents\1804_GGP_GC_CLUBHOUSE_R18_eharriso.rvt
11/2/2020 6:18:43 PM

Original Sheet Size: 22"x34"

LOCATION MAP

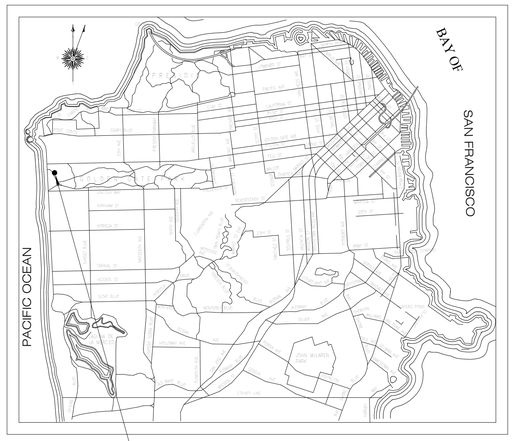

PROJECT DATA

PROJECT NAME:	GOLDEN GATE PARK GOLF CLUBHOUSE
ADDRESS:	970 47TH AVENUE SAN FRANCISCO, CA 94121
OCCUPANCY:	B
TYPE OF CONSTRUCTION:	V (NON-SPRINKLERED)

APPLICABLE BUILDING CODES:

- 2019 CA BUILDING CODE (CBC) WITH SF AMENDMENTS
- 2019 CA ENERGY CODE WITH SF AMENDMENTS
- 2019 CA ADMINISTRATIVE CODE (CAC)
- 2019 CA ELECTRICAL CODE (CEC) WITH SF AMENDMENTS
- 2019 CA MECHANICAL CODE (CMC) WITH SF AMENDMENTS
- 2019 CA PLUMBING CODE (CPC) WITH SF AMENDMENTS
- 2019 CA FIRE CODE (CFC) WITH SF AMENDMENTS
- 2010 DOJ ADA STANDARDS FOR ACCESSIBLE DESIGN

TOTAL FLOOR AREA:	1560 SF
LOT/BLOCK NO.:	1700/001

DESCRIPTION OF WORK

CONSTRUCTION OF A NEW GOLF CLUBHOUSE BUILDING CONSITING OF A PRO SHOP, BAR, KITCHEN, DINING AREA, OFFICE, AND RESTROOMS. INCLUDES EXCAVATION, SITEWORK, UTILITIES, STRUCTURAL STEEL AND CONCRETE, CARPENTRY, PLUMBING, ELECTRICAL, MECHANICAL.

ABBREVIATIONS

AFF	ABOVE FINISH FLOOR
ACP	ACCESS PANEL
ACC	ACCESSIBLE
ACOUS	ACOUSTICAL
ACT	ACOUSTICAL CEILING TILE
ADDL	ADDITIONAL
ADJ	ADJUSTABLE
ALT	ALTERNATE
AL, ALUM	ALUMINUM
&	AND
>	ANGLE
ANOD	ANODIZED
APPROX	APPROXIMATE
ARCH	ARCHITECT, ARCHITECTURAL
AD	AREA DRAIN
@	AT
BIT	BITUMINOUS
BLKG	BLOCKING
BD	BOARD
BOT	BOTTOM
BO	BOTTOM OF
BLDG	BUILDING
CBC	CALIF BUILDING CODE
CL	CENTERLINE
CLR	CLEAR
CONC	CONCRETE
CONN	CONNECTION
CONST, CONS	CONSTRUCTION
CONT	CONTINUOUS
CSK	COUNTERSUNK
DET	DETAIL
DIA OR DIAM	DIAMETER
Ø	DIAMETER
DIM	DIMENSION
DN	DOWN
DWG	DRAWING
EA	EACH
EOS	EDGE OF SLAB
ELEC	ELECTRICAL
EL, ELEV	ELEVATION, ELEVATOR
ENCL	ENCLOSED / ENCLOSURE
EQ	EQUAL
EQMT	EQUIPMENT
(E)	EXISTING
EXP	EXPANSION
FOC	FACE OF CONCRETE
FOW	FACE OF WALL
FE	FIRE EXTINGISHER
FEC	FIRE EXTINGISHER CABINET
FIX	FIXTURE
FLG	FLOOR, FLOORING
FT	FOOT, FEET
GSM	GALVANIZED SHEET METAL
GA	GAUGE, GAGE
GL	GLAZING, GLASS
GND	GROUND
GB	GYPSUM BOARD
HDW	HARDWARE
HT	HEIGHT
HM	HOLLOW METAL
HSS	HOLLOW STRUCTURAL SECTION
HR	HOUR
ID	INSIDE DIAMETER
INSUL	INSULATION
INT	INTERIOR
LAM	LAMINATE
MFR	MANUFACTURER
MAX	MAXIMUM
MECH	MECHANICAL
MET, MTL	METAL
MIN	MINIMUM
MTD	MOUNTED
(N)	NEW
N/A	NOT APPLICABLE
NIC	NOT IN CONTRACT
NTS	NOT TO SCALE
NO	NUMBER
OC	ON CENTER
OPP	OPPOSITE
OD	OUTSIDE DIAMETER
O/	OVER
OD	OVERFLOW DRAIN
OFCI	OWNER FURNISHED CONTRACTOR INSTALLED
PT	PAINT
PTD	PAINTED, PAPER TOWEL DISPENSER
PHMS	PAN HEAD MACHINE SCREW
PERIM	PERIMETER
PLAS	PLASTIC
PLYWD	PLYWOOD
#	POUND, NUMBER
PDF	POWDER DRIVEN FASTENER
PT	PRESSURE TREATED
RAD	RADIUS
RWL	RAIN WATER LEADER
RCP	REFLECTED CEILING PLAN
RLV	REFLECTED LIGHT VALUE
REQD	REQUIRED
RD	ROOF DRAIN
SND	SANITARY NAPKIN DISPENSER OR DISPOSER
SCH, SCHED	SCHEDULE, SCHEDULED
SECT	SECTION
SCD	SEE CIVIL DRAWINGS
SED	SEE ELECTRICAL DRAWINGS
SLD	SEE LANDSCAPE DRAWINGS
SMD	SEE MECHANICAL DRAWINGS
SPD	SEE PLUMBING DRAWINGS
SSD	SEE STRUCTURAL DRAWINGS
SAF	SELF-ADHESIVE FLASHING
SHT	SHEET
SMS	SHEET METAL SCREW
SIM	SIMILAR
SD	SOAP DISPENSER
SPEC	SPECIFICATIONS
SFRM	SPRAY APPLIED FIRE RESISTIVE MATERIAL
SQ	SQUARE
SS, SST	STAINLESS STEEL
STD	STANDARD
STL	STEEL
STO	STORAGE
TEMP	TEMPERED, TEMPERATURE
TPH	TOILET PAPER HOLDER
TSCD	TOILET SEAT COVER DISPENSER
UON	UNLESS OTHERWISE NOTED
VIF	VERIFY IN FIELD
WRB	WEATHER RESISTIVE BARRIER
WO	WHERE OCCCURS
WIN	WINDOW
W/	WITH
W/O	WITHOUT
WD	WOOD

PROJECT DIRECTORY

CLIENT

SAN FRANCISCO RECREATION & PARK DEPARTMENT
CAPITAL DIVISION

ATTN: NOAH LEVY
49 S VAN NESS AVENUE,
STE. 1220
SAN FRANCISCO, CA
94103
P: 628.652-6633
E: NOAH.LEVY@SFGOV.ORG

LANDSCAPE ARCHITECTURE

SAN FRANCISCO PUBLIC WORKS
BUILDING DESIGN & CONSTRUCTION
BUREAU OF LANDSCAPE ARCHITECTURE

ATTN: LIZZY HIRSCH
49 S VAN NESS AVENUE,
STE. 1000
SAN FRANCISCO, CA
94103
P: 628.271.2843
E: LIZZ.HIRSCH@SFDPW.ORG

ARCHITECTURE

SAN FRANCISCO PUBLIC WORKS
BUILDING DESIGN & CONSTRUCTION
BUREAU OF ARCHITECTURE

ATTN: PAUL DE FREITAS
49 S VAN NESS AVENUE,
STE. 1100
SAN FRANCISCO, CA
94103
P: 628.271.2865
E: PAUL.DEFREITAS@SFDPW.ORG

STRUCTURAL ENGINEER

SAN FRANCISCO PUBLIC WORKS
INFRASTRUCURE DESIGN & CONSTRUCTION
STRUCTURAL SECTION

ATTN: FRANK PIRUZMAND
49 S VAN NESS AVENUE,
STE. 900
SAN FRANCISCO, CA
94103
P: 628.271.2612
E: FRANK.PIRUZMAND@SFDPW.ORG

MECHANICAL ENGINEER

SAN FRANCISCO PUBLIC WORKS
INFRASTRUCURE DESIGN & CONSTRUCTION
MECHANICAL SECTION

ATTN: JAMES NG
49 S VAN NESS AVENUE,
STE. 900
SAN FRANCISCO, CA
94103
P: 628.271.2730
E: JAMES.NG@SFDPW.ORG

ELECTRICAL ENGINEER

SAN FRANCISCO PUBLIC WORKS
INFRASTRUCURE DESIGN & CONSTRUCTION
ELECTRICAL SECTION

ATTN: EARL GAFFUD
49 S VAN NESS AVENUE,
STE. 900
SAN FRANCISCO, CA
94103
P: 628.271.2709
E: EARL.GAFFUD@SFDPW.ORG

BUREAU OF ARCHITECTURE

SAN FRANCISCO PUBLIC WORKS

Ron Alameida - City Architect
Julia Laue - Principal Architect / Bureau Manager
49 S Van Ness Ave., Suite 1100, San Francisco, CA 94103
Phone (628)271-2865

Golden Gate Park Golf Clubhouse

970 47th Avenue
San Francisco, CA 94121

Consultant

95% CD 11.16.2020

No.	Date	Revisions

PM Noah Levy
PA Paul DeFreitas
Drawn Author
Checked Checker

NOT FOR CONSTRUCTION

Drawing Title

PROJECT DATA AND ABBREVIATIONS

Sheet No. G0.10

Scale: 12" = 1'-0"

Project No. 1804

Original Sheet Size: 22"x34"

C:\Users\eharriso\Documents\1804_GGP_GC_CLUBHOUSE_R18_eharriso.rvt
11/2/2020 6:18:44 PM

DRAWING INDEX

GENERAL
G0.0 COVER SHEET
G0.11 SHEET INDEX AND LEGEND
G1.10 ADA COMPLIANCE CHECKLIST, COMPLIANCE MEASURES
G1.20 GREEN BUILDING FORMS
G2.10 LIFE SAFETY/OCCUPANCY LOAD DIAGRAM
G3.11 TOILET ROOM DOOR SIGNAGE
G3.12 DOOR EXIT SIGNAGE
G3.21 TYPICAL ACCESSIBLE DOORS AND GATES
G3.31 ACCESSIBLE DRINKING FOUNTAIN & WALL & FLOOR ACCESSORIES
G3.32 ACCESSIBLE TOILET ROOM STANDARD DETAILS
G3.33 ACCESSIBLE TOILET ROOM ACCESSORIES DETAILS
G3.34 ACCESSIBLE TOILET RESTROOM STANDARD DETAILS
G3.35 ACCESSIBLE TOILET ROOM ALTERNATE DETAILS
G3.51 PARKING
G3.52 ELECTRIC VEHICLE CHARGING STATIONS - ENLARGED PARKING SPACES
LANDSCAPE
L0.0 LANDSCAPE GENERAL NOTES, ABBREVIATIONS & INDEX
L1.0 DEMOLITION PLAN
L2.0 LAYOUT & MATERIALS PLAN
L3.0 GRADING PLAN
L4.0 IRRIGATION PLAN
L4.1 IRRIGATION LEGEND & NOTES
L5.0 PLANTING PLAN
L5.1 PLANTING DETAILS
L6.0 LANDSCAPE CONSTRUCTION DETAILS
L6.1 LANDSCAPE CONSTRUCTION DETAILS
L6.2 LANDSCAPE CONSTRUCTION DETAILS
L6.3 LANDSCAPE CONSTRUCTION DETAILS
ARCHITECTURE
A1.20 DEMOLITION SITE PLAN
A1.30 SITE PLAN
A2.10 FLOOR PLAN
A2.20 ROOF PLAN
A3.10 EXTERIOR BUILDING ELEVATIONS_NORTH & EAST
A3.11 EXTERIOR BUILDING ELEVATIONS_SOUTH & WEST
A3.30 BUILDING SECTIONS
A3.31 BUILDING SECTIONS
A3.32 BUILDING SECTIONS
A3.40 WALL SECTIONS
A3.41 WALL SECTIONS
A4.10 ENLARGED FLOOR PLANS_PREP, RESTROOM, KITCHEN & PRO SHOP
A4.11 ENLARGED FLOOR PLANS_RETAIL/DINING
A4.12 ENLARGED FLOOR PLANS_TRASH ENCLOSURE
A5.10 INTERIOR ELEVATIONS - KITCHEN AND PROSHOP_NORTH & EAST
A5.11 INTERIOR ELEVATIONS - KITCHEN AND PROSHOP_SOUTH & WEST
A5.12 INTERIOR ELEVATIONS - BOH
A5.13 INTERIOR ELEVATIONS - RESTROOMS
A5.14 INTERIOR ELEVATIONS - ADMIN AND UTILITY
A6.10 REFLECTED CEILING PLAN
A8.20 EXTERIOR WALL DETAILS
A8.30 ROOFING DETAILS
A8.51 EXTERIOR WINDOW AND LOUVER SCHEDULE_WEST NORTH
A8.52 EXTERIOR WINDOW AND LOUVER SCHEDULE - EAST SOUTH
A8.53 EXTERIOR WINDOW DETAILS
A8.54 EXTERIOR WINDOW PLAN DETAILS
A8.61 EXTERIOR DOOR DETAILS
A9.10 PARTITION SCHEDULE, PARTITION DETAILS
A9.40 DOOR SCHEDULE AND OTHER INTERIOR OPENINGS
A9.61 CASEWORK & MILLWORK DETAILS - PRO SHOP
A9.62 CASEWORK & MILLWORK DETAILS - KITCHEN
A9.63 CASEWORK STANDARD DETAILS
A9.64 CASEWORK STANDARD DETAILS
A11.00 PROGRAM AXONOMETRIC
A11.10 MATERIAL AXONOMETRIC
STRUCTURAL
S1.1 STRUCTURAL GENERAL NOTES
S1.2 STRUCTURAL GENERAL NOTES
S1.3 STRUCTURAL GENERAL NOTES
S1.4 STRUCTURAL GENERAL NOTES
S1.5 STRUCTURAL GENERAL NOTES
S1.6 STRUCTURAL TYPICAL CONCRETE DETAILS
S1.7 STRUCTURAL TYPICAL CONCRETE DETAILS
S1.8 STRUCTURAL TYPICAL WOOD DETAILS
S1.9 STRUCTURAL TYPICAL WOOD DETAILS
S1.10 STRUCTURAL TYPICAL WOOD DETAILS
S2.1 FOUNDATION AND FLOOR PLAN
S2.2 ROOF PLAN
S4.1 EAST ELEVATION
S4.2 NORTH ELEVATION
S4.3 WEST ELEVATION
S4.4 SOUTH ELEVATION
MECHANICAL
M0.01 MECHANICAL ABBREVIATIONS, SYMBOLS, AND LEGEND
M0.02 MECHANICALGENERAL NOTES
M0.90 MECHANICAL EQUIPMENT SCHEDULES
M2.10 MECHANICAL FLOOR PLAN - DUCTWORK
M2.11 MECHANICAL FLOOR PLAN - REFRIGERANT PIPING
M3.01 MECHANICAL SECTIONS I
M3.02 MECHANICAL SETIONS II
M4.01 VRF DIAGRAMS
PLUMBING
P0.01 PLUMBING ABBREVIATIONS, SYMBOLS, AND LEGEND
P0.02 PLUMBING GENERAL NOTES
P0.90 PLUMBING EQUIPMENT SCHEDULE
P2.10 PLUMBING FLOOR PLAN - DOMESTIC WATER
P2.11 PLUMBING FLOOR PLAN - WASTE & VENT
P2.12 PLUMBING ROOF PLAN
P4.01 DOMESTIC HOT WATER PIPING DIAGRAM
ELECTRICAL
E0.1 LEGEND, GENERAL NOTES, ABBREVIATIONS & DRAWING LIST
E0.2 SINGLE LINE DIAGRAM
E0.3 SCHEDULES
E1.0 ELECTRICAL SITE PLAN
E2.0 LIGHTING PLAN
E3.0 POWER PLAN

LEGEND

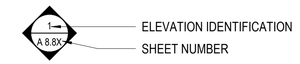

EXTERIOR ELEVATION
ELEVATION IDENTIFICATION
SHEET NUMBER

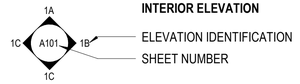

INTERIOR ELEVATION
ELEVATION IDENTIFICATION
SHEET NUMBER

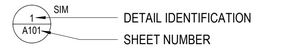

DETAIL CALLOUT
DETAIL IDENTIFICATION
SHEET NUMBER

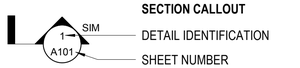

SECTION CALLOUT
DETAIL IDENTIFICATION
SHEET NUMBER

ELEVATION MARKER

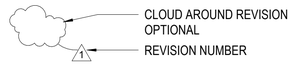

REVISION
CLOUD AROUND REVISION OPTIONAL
REVISION NUMBER

PROJECT NORTH

DOOR SYMBOL AND NUMBER

WINDOW SYMBOL AND NUMBER

ROOM INDENTIFICATION

ROOM NAME
ROOM NUMBER

GRID LINE IDENTIFICATION

PARTITION TYPE

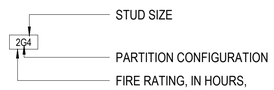

STUD SIZE
PARTITION CONFIGURATION
FIRE RATING, IN HOURS, WHERE APPLIES

\# **DEMOLITION KEY NOTE**

\# **KEY NOTE**

FD **FLOOR DRAIN**

BUREAU OF ARCHITECTURE

SAN FRANCISCO PUBLIC WORKS

Ron Alameida - City Architect
Julia Laue - Principal Architect / Bureau Manager
49 S Van Ness Ave., Suite 1100, San Francisco, CA 94103
Phone (628)271-2865

Golden Gate Park Golf Clubhouse

970 47th Avenue
San Francisco, CA 94121

Consultant

95% CD 11.16.2020

No.	Date	Revisions

PM Noah Levy
PA Paul DeFreitas
Drawn Author
Checked Checker

NOT FOR CONSTRUCTION

Drawing Title

SHEET INDEX AND LEGEND

Sheet No.
G0.11
Scale: 1/4" = 1'-0"

Project No.
1804

Original Sheet Size: 22"x34"

C:\Users\eharriso\Documents\1804_GGP_GC_CLUBHOUSE_R18_eharriso.rvt
11/2/2020 6:18:45 PM

DISABILITY ACCESS CHECKLIST

D.A. CHECKLIST (p. 1 of 2): The address of the project is :_____

For ALL tenant improvement projects in commercial use spaces, both pages of this checklist are required to be reproduced on the plan set and signed.

1. The proposed use of the project is _____ (e.g. Retail, Office, Restaurant, etc.)
2. Describe the area of remodel, including which floor: _____
3. The construction cost of this project *excluding* disabled access upgrades *to the path of travel* is $_____, which is ; *(check one)* ☐ more than / ☐ less than the 2018 Accessibility Threshold amount of **$161,290.00** (updated annually by the California Division of the State Architect)).
4. Is this a City project and/or does it receive any form of public funding? *Check one:* ☐ ☐Yes / ☐ ☐No Note: If Yes, then see Step 3 on the Instructions page of the Disabled Access Upgrade Compliance Checklist package for additional forms required.

Conditions below must be fully documented by accompanying drawings

5. Read **A** through **D** below carefully and check the most applicable boxes. Check one box only:

☐ **A:** All existing conditions serving the area of remodel fully comply with access requirements. No further upgrades are required: **Fill out page 2 of D.A. Checklist**
☐ **B:** Project Adjusted cost of construction is greater than the current valuation threshold: **Fill out and attach page 2 of D.A. Checklist and any other required forms to plans**
☐ **C:** Project adjusted cost of construction is less than or equal to the current valuation threshold: **List items that will be upgraded on Form C. All other items shall be checked on page 2 of the D.A. Checklist in the "Not required by code" column.**
☐ **D:** Proposed project consists entirely of Barrier removal: **Fill out and attach Barrier removal form to Plans The project is exempt work per definition of 11B-202.3 Alteration.**
☐ **E: Proposed project is** minor revision to previously approved permit drawings only. (Note: This shall NOT be used for new or additional work) Provide previously approved permit application here: _____. Description of revision:

CBC chapter 2 section 202 Definitions:

Technically Infeasible. An alteration of a building or a facility, that has little likelihood of being accomplished because the existing structural conditions require the removal or alteration of a load-bearing member that is an essential part of the structural frame, or because other existing physical or site constraints prohibit modification or addition of elements, spaces or features that are in full and strict compliance with the minimum requirements for new construction and which are necessary to provide accessibility.

Unreasonable Hardship. When the enforcing agency finds that compliance with the building standard would make the specific work of the project affected by the building standard infeasible, based on an overall evaluation of the following factors:

1. The cost of providing access.
2. The cost of all construction contemplated.
3. The impact of proposed improvements on financial feasibility of the project.
4. The nature of the accessibility which would be gained or lost.
5. The nature of the use of the facility under construction and its availability to persons with disabilities

The details of any Technical Infeasibility or Unreasonable Hardship shall be recorded and entered into the files of the Department. All Unreasonable Hardships shall be ratified by the AAC.

D.A. CHECKLIST (p. 2 of 2): The address of the project is :_____

Check all applicable boxes and specify where on the drawings the details are shown:

Note: upgrades below are listed in priority based on CBC-11B-202.4, exception 8	Existing Fully Complying	Will be Up-graded to full Compliance	Equivalent facilitation will provide full access	Compliance is Technically Infeasible	Approved in compliance with immediately preceding code	Not required by Code (and/or none existing)	Non-compliant request URH Must be ratified by AAC	Location of detail(s)- include detail no. & drawing sheet (*do not leave this part blank!*). Also clarification comments can be written here.
A. One accessible entrance including: approach walk, vertical access, platform (landings), door / gate and hardware for door/gate	☐	☐	☐	☐	☐	☐	☐	
B. An accessible route to the area of remodel including:								
Parking/access aisles and curb ramps	☐	☐	☐	☐		☐	☐	
Curb ramps and walks	☐	☐	☐	☐		☐	☐	
Corridors, hallways, floors	☐	☐	☐	☐		☐	☐	
Ramps elevators, lifts	☐	☐	☐	☐		☐	☐	
C. At least one accessible restroom for each sex *or a* single unisex restroom serving the area of remodel.	☐	☐	☐	☐	☐	☐	☐	
D. Accessible public pay phone.	☐	☐	☐	☐	☐	☐	☐	
E. Accessible drinking fountains.	☐	☐	☐	☐	☐	☐	☐	
F. Additional accessible elements such as parking, stairways, storage, alarms and signage.	☐	☐	☐	☐	☐	☐	☐	
See the requirements for additional forms listed below	1.	2.	3.	4.	5.	6.	7.	

1. No additional forms required
2. No additional forms required
3. Fill out Request for Approval of Equivalent Facilitation form for each item checked and attach to plan.
4. Fill out Request for Approval of Technical Infeasibility form for each item checked and attach to plans.
5. Provide details from a set of City approved reference drawings, provide its permit application number here:_____ and list reference drawing number on plans.
6. No additional forms required
7. Fill out Request for an Unreasonable Hardship form for each item checked and attach to plan. All UHR must be ratified by the Access Appeals Commission (see UHR form for details)

TECHNICAL INFEASIBILITY REQUEST

CITY AND COUNTY OF SAN FRANCISCO
DEPARTMENT OF BUILDING INSPECTION

London N. Breed, Mayor
Tom C. Hui, S.E. , C.B.O., Director

APPROVAL OF TECHNICAL INFEASIBILITY REQUEST

To be used where it is technically infeasible to meet the prescriptive requirements of the code within the scope of work of an alteration or within an existing path of travel to the area of work of an alteration or addition. as per CBC section *11B-202.3*

1. Site Address: _____ 2. Floor: _____
3. Permit Application No.: _____ 4. Request No.: _____
5. Existing Use: _____ 6. Proposed Use: _____
7. Existing Occupancy: _____ 8. Proposed Occupancy: _____
9. Description of proposed alteration element or path of travel upgrade for which technical infeasibility approval is requested:

CBC 11B-202.3, In alterations, where the enforcing authority determines compliance with applicable requirements is technically infeasible, the alteration shall provide equivalent facilitation or comply with the requirements to the maximum extent feasible. See CBC Chapter 2, section 202; *Technically Infeasible*

10. This alteration is technically Infeasible due to:
    - ☐ It would require removal or alteration of a load bearing member that is an essential part of the structural frame or
    - ☐ Other existing physical or site constraints
11. Detailed description of the technical infeasibility. (provide details, documents and drawings if required or requested by staff)

12. ☐ Compliance with the regulations will be provided to the maximum extent feasible; (give description)

(For the re-use of this form.) I have verified that the above stated compliance is still in effect and is the maximum degree of compliance possible. Applicant initials _____ and date _____.

13. Applicant's Name (Print): _____
    ☐ Owner ☐ Tenant ☐ Agent
    Applicant's Signature: _____
14. Applicant's Address: _____
15. Applicant's Phone: _____ Applicants Email: _____

APPROVAL OF TECHNICAL INFEASIBILITY REQUEST (page 2)

FOR THE DEPARTMENT OF BUILDING INSPECTION STAFF USE ONLY

This technical infeasibility request is:
❑ ***APPROVED (FOR THIS PERMIT ONLY)*** ❑ ***DENIED***

Plans reviewed by (print name): _____

Signature of the Plans Examiner: _____ Date: _____

Approved for the following reason(s): _____

Denied for the following reason(s): _____

*Signature of the Group Supervisor: _____ Date: _____

☐ Approved for re-use Supervisor initials _____ and Date_____.

If your Request for Approval of Technical Infeasibility has been denied, the plans examiner shall inform you of the reasons for denying that request. In addition, the plans examiner's group supervisor shall provide you with a second opinion regarding the denial.

If your Request for Approval of Technical Infeasibility has been denied, you may file an appeal with the Access Appeals Commission. Please refer to the Access Appeals Commission Information Guide, available at the Customer Services desk, for complete information on this process.

Please submit appeals in person to:

Secretary, Access Appeals Commission
1660 Mission Street, 3rd Floor
San Francisco, CA 94103
(415) 558-6110

ACCESSIBILITY COMPLIANCE LETTER

SAN FRANCISCO PUBLIC WORKS

London N. Breed
Mayor

Alaric Degrafinried
Acting Director

Julia Laue, AIA LEED AP
Principal Architect
& Bureau Manager

Arfaraz Khambatta, CASp
Disability Access Coordinator

Building Design and Construction
30 Van Ness Ave. Ste. #4100
San Francisco, CA 94102
(415) 557-4676
Arfaraz.Khambatta@sfdpw.org

DISABILITY ACCESS COMPLIANCE FOR CITY PROJECTS

Applicants to fill in project name + address before scanning this form onto their plans.
For Alterations, add SF DBI – DA-02 checklist & form(s) as applicable

Leave Area Below Blank – for PW BDC Disability Access Coordinator (DAC) Staff Use

DESIGN PHASE: Public Works Building Design and Construction DAC has reviewed & approved:

- ❑ Pre-application meeting(s) / site permit review
- ❑ SF DBI DA-02 Checklist / Technical Infeasibility Request forms
- ❑ Playground ADA Inventory form
- ❑ Accessible Means of Egress plans
- ❑ Elements exempt from accessibility requirements, per 11B-203
- ❑ Exempt HVAC, reroofing, electrical or cosmetic work *only*, not affecting accessibility elements
- ❑ **FINAL CONSTRUCTION PLANS FOR PERMIT APPLICATIONS**

CONSTRUCTION PHASE: The following inspections, if selected, are required:
Call 415-557-4676 to schedule inspection(s).

- ❑ **ROUGH FRAMING, after plumbing & electrical rough-in is complete, prior to cover**
- ❑ **BRAILLE / TACTILE SIGNAGE, including proofs and color samples prior to fabrication**
  - ❑ Door opening force and closing speed (after final air balance, if applicable)
  - ❑ Power door operator testing and signage per BHMA A156.19
  - ❑ Play Area equipment, use zones and accessible routes
  - ❑ Off-site curb ramps, blue zone parking spaces and passenger loading zones
- ❑ **INSPECTION AT 95% ~ 98% COMPLETE**, but prior to or as-needed for T.C.O.
- ❑ **FINAL INSPECTION ON PROJECT,** sign-off on SF-DBI Job Card, if applicable

Arfaraz Khambatta, CASp Public Works, BDC Disability Access Coordinator Date

BUREAU OF ARCHITECTURE

SAN FRANCISCO PUBLIC WORKS

Ron Alameida - City Architect
Julia Laue - Principal Architect / Bureau Manager
49 S Van Ness Ave., Suite 1100, San Francisco, CA 94103
Phone (628)271-2865

Golden Gate Park Golf Clubhouse

970 47th Avenue
San Francisco, CA 94121

Consultant

95% CD 11.16.2020

No.	Date	Revisions

PM Noah Levy
PA Paul DeFreitas
Drawn Author
Checked Checker

NOT FOR CONSTRUCTION

Drawing Title

ADA COMPLIANCE CHECKLIST, COMPLIANCE MEASURES

Sheet No. G1.10

Scale: 12" = 1'-0"

Project No. 1804

Original Sheet Size: 22"x34"

C:\Users\ehanso\Documents\1804_GGP_GC_CLUBHOUSE_R18_ehanso.rvt
11/2/2020 6:18:47 PM

GS6: San Francisco Green Building Submittal Form for Municipal Projects

Form version: October 10, 2017 (For permit applications January 2017 - December 2019)

INSTRUCTIONS:

1. **Select one (1) column to the right.**
2. **For each requirement in the column, indicate evidence of fulfillment in the References column.**
3. **Fill out the project information in the Verification box at the right.**
4. **Attach LEED Scorecard on separate, subsequent sheet.**
5. **Submittal must be a minimum of 24" x 36".**

CHECK THE ONE COLUMN THAT BEST DESCRIBES YOUR PROJECT

**This form includes the requirements of San Francisco Green Building Code and Environment Code Chapter 7. Major Renovations as defined by Environment Code Chapter 7 also include Major Alterations as defined by SFGBC, where applicable.*

	TITLE	SOURCE OF REQUIREMENT	LEED v4 CREDIT	DESCRIPTION OF REQUIREMENT	MUNICIPAL: ☐ NEW CONSTRUCTION & MAJOR RENOVATION* (10,000 sq.ft. or greater)	MUNICIPAL: ☐ COMMERCIAL INTERIORS (10,000 sq.ft. or greater)	MUNICIPAL: ☐ SMALL PROJECTS (less than 10,000 sq.ft. or any not meeting LEED MPR's)	REFERENCES: DRAWING OR SPECIFICATION # (If not applicable, indicate "N/A".)
LEED	Required LEED Certification Level	Environment Code sec.705		Project is required to achieve sustainability certification listed at right.	GOLD (60+) CERTIFIED	GOLD (60+) CERTIFIED, LEED CI	*n/r*	
LEED	LEED Point Adjustment for Retention/Demolition of Historic Features/Building	SFGBC 5.104		Enter any applicable point adjustments in box at right.	_____	_____	*n/r*	
LEED	LEED Points shown on Current Scorecard			Enter current expected LEED score in box at right.	_____	_____	*n/r*	
LEED	LEED Scorecard Submittals			Submit LEED Scorecard to Municipal Green Building Task Force at 100% Concept Design and As-Built (LEED Online is acceptable means of submittal).	•	•	•	
MATERIALS	LOW-EMITTING MATERIALS	Environment Code sec.706 OR CALGreen 5.504.4.1-6	EQc2	For projects ≥10,000 sq.ft., use products that comply with LEED emissions & content requirements for paints, coatings, adhesives, sealants, flooring, composite wood, ceiling/wall/thermal/acoustic insulation, furniture if part of scope, and exterior applied products if healthcare or school project. For projects <10,000 sq.ft., use products that comply with the emission limit requirements of 5.504.4.1-6 for adhesives, sealants, paints, coatings, carpet systems including cushions and adhesives, resilient flooring (80% of area), and composite wood products.	LEED EQc2 (3 pts)	LEED EQc2 (3 pts)	5. 504.4.1-6	
MATERIALS	PVC ELIMINATION	Environment Code sec.509		Specify no materials containing PVC.	•	•	•	
MATERIALS	LEAD ELIMINATION	Environment Code sec.711		Specify no materials containing lead.	•	•	•	
MATERIALS	TROPICAL HARDWOOD & VIRGIN REDWOOD BAN	Environment Code ch.8		Specify no tropical hardwoods or virgin redwoods.	•	•	•	
WATER	INDOOR WATER USE REDUCTION	Environment Code sec.706, CALGreen 5.303.3	WEp2, WEc2	Meet flush/flow requirements for: toilets (1.28gpf); urinals (0.125gpf wall, 0.5gpf floor); showerheads (2.0gpm); lavatories (1.2gpm private, 0.5gpm public/common); kitchen faucets (1.8gpm); wash fountains (1.8gpm); metering faucets (0.2gpc); food waste disposers (1gpm/8gpm). Additionally, for projects ≥10,000 sq.ft., use minimum 30% less potable water as calculated using a baseline with toilets (1.6gpf); urinals (1.0gpf); showerheads (2.5gpm); lavatories (2.2gpm private, 0.5gpm public); kitchen faucets (2.2gpm).	LEED WEp2, LEED WEc2 (2 pts)	LEED WEp2 LEED WEc2 (4 pts)	5.303.3	
WATER	NON-POTABLE WATER REUSE	Health Code art.12C	WEc2	New buildings ≥40,000 sq.ft. must calculate a water budget. New buildings ≥250,000 sq.ft. must treat and use available rainwater, graywater, and foundation drainage for toilet and urinal flushing and irrigation.	•	*n/r*	*n/r*	
WATER	WATER-EFFICIENT IRRIGATION	Administrative Code ch.63	WEp1, WEc1	New construction projects with aggregated landscape area ≥500 sq.ft., or existing projects with modified landscape area ≥1,000 sq.ft., shall use low water use plants or climate appropriate plants, restrict turf areas and comply with Model Water Efficient Landscape Ordinance restrictions by calculated ETAF ≤.45 or by prescriptive compliance for projects with ≤2,500 sq.ft. of landscape area.	•	•	•	
WATER	WATER METERING	CALGreen 5.303.1	WEc4	For area of project, provide submeters for spaces projected to consume >1,000gal/day (or >100gal/day in buildings >50,000 sq.ft.).	•	•	•	
ENERGY	ENERGY EFFICIENCY	Environment Code sec.706, CA Energy Code	EAp2, EAc2	Comply with all provisions of the CA Energy Code. For projects ≥10,000 sq.ft., produce a whole-building energy simulation, or follow ASHRAE 50% Advanced Design Guide, or follow Advanced Building Core Performance Guide. Achieve energy use below established baseline by 5% for New Construction, 3% for Major Renovations, 2% for Core & Shell, 3% for Commercial Interiors. Commercial Interiors alternate compliance – reduce lighting power density by 5% below ASHRAE 90.1-2010 and install ENERGY STAR equipment for 50% of all eligible ENERGY STAR equipment.	LEED EAp2	LEED EAp2	•	
ENERGY	ZERO NET ENERGY TARGET	Environment Code sec.706	EAc2	Set target for annual energy consumption. Reporting required to Municipal Green Building Task Force. See Enviornment Regulations for guidance, tools and methods.	•	*n/r*	*n/r*	
ENERGY	ZERO NET ENERGY FEASIBILITY	Environment Code sec.706	EAc2	Determine feasibility to achieve Zero Net Energy (≤3 stories). Reporting required to Municipal Green Building Task Force. See Enviornment Regulations for guidance, tools and methods.	•	*n/r*	*n/r*	
ENERGY	PV + ENERGY STORAGE BENEFIT/COST ANALYSIS	Environment Code sec.706	EAc2, EAc5	Analyze Benefit/Cost Analysis for solar plus battery storage for defined building types. Reporting required to Municipal Green Building Task Force. See Enviornment Regulations for guidance, tools and methods.	•	*n/r*	*n/r*	
ENERGY	BETTER ROOFS	Planning Code sec.149, SFGBC div.5.2	EAc2 or various	New buildings with ≤10 floors must designate 15% of roof Solar Ready, per Title 24 rules. Install photovoltaics or solar hot water systems in this area. With Planning Department approval, projects subject to SFPUC Stormwater Requirements may substitute living roof for solar energy systems.	•	*n/r*	if new construction ≥2,000 sq.ft.	
ENERGY	RENEWABLE ENERGY	SFGBC 5.201.1.3	EAc2, EAc5	New buildings ≥11 floors must acquire renewable onsite energy or achieve 5 points under LEED credit Optimize Energy Performance (EAc2).	•	*n/r*	*n/r*	
ENERGY	COMMISSIONING (Cx)	Environment Code sec.706 OR CALGreen 5.410.2-5.410.4.5.1	EAp1, EAc1	For projects ≥10,000 sq.ft., comply with LEED Cx requirements – OPR, BOD, systems testing, operations manual, and Enhanced and Monitoring-Based Commissioning. For projects <10,000 sq.ft. and all new equipment in alterations & additions, comply with 5.410.2-5.410.4.5.1 – test and adjust all equipment.	LEED EAp1, LEED EAc1 (3+ pts)	LEED EAp1, LEED EAc1 (4+ pts)	5.410.2-5.410.4.5.1	
PARKING	BICYCLE PARKING	Planning Code sec.155.1-3, CAL Green 5.106.4	LTc6	Provide short- and long-term bike parking equal to 5% of motorized vehicle parking, or meet SF Planning Code sec.155.1-3, whichever is greater.	•	•	5.106.4	
PARKING	DESIGNATED PARKING	CALGreen 5.106.5.2	LTc7	If >10 total stalls added, comply with Table 5.106.5.2 (approx. 8% of total spaces).	•	•	•	
PARKING	WIRING FOR EV CHARGING	CALGreen 5.106.5.3	LTc8	Install electrical systems to provide electricity for EV chargers at 6% of spaces or per 5.106.5.3 (installation of chargers is not required.)	if new construction	*n/r*	if new construction	
WASTE DIVERSION	RECYCLING BY OCCUPANTS	Environment Code sec.707	MRp1	Provide adequate space and equal access for storage, collection and loading of compostable, recyclable and landfill materials.	•	•	•	
WASTE DIVERSION	CONSTRUCTION & DEMOLITION (C&D) WASTE MANAGEMENT	Environment Code sec.706, sec.708 & ch.14	MRp2, MRc5	Divert a minimum of 75% of total C&D debris including at least 4 material streams. For 100% of mixed C&D debris use registered transporters and registered processing facilities.	LEED MRp2, LEED MRc5	LEED MRp2, LEED MRc5	75% diversion	
HVAC	REFRIGERANT MANAGEMENT	CALGreen 5.508.1	EAp4	Use no halons or CFCs in HVAC.	•	•	•	
GOOD NEIGHBOR	LIGHT POLLUTION REDUCTION	CA Energy Code, CALGreen 5.106.8	SSc6	Comply with CA Energy Code for Lighting Zones 1-4. Comply with 5.106.8 for Backlight/Uplight/Glare.	if new construction	*n/r*	if new construction	
GOOD NEIGHBOR	BIRD-SAFE BUILDINGS	Planning Code sec.139	pilot credit	Glass facades and bird hazards facing and/or near Urban Bird Refuges may need to treat their glass for opacity.	•	•	•	
GOOD NEIGHBOR	TOBACCO SMOKE CONTROL	Health Code art.19F & art.19I, CALGreen 5.504.7	EQp2	Prohibit smoking within 25 feet of building entries, air intakes, and operable windows.	•	•	•	
POLLUTION PREVENTION	STORMWATER CONTROL PLAN	Public Works Code art.4.2 sec.147	SSc4	Projects disturbing ≥5,000 sq.ft. in combined or separate sewer areas, or replacing ≥2,500 impervious sq.ft. in separate sewer area, must implement a Stormwater Control Plan meeting SFPUC Stormwater Management Requirements.	if applicable	if applicable	if applicable	
POLLUTION PREVENTION	CONSTRUCTION SITE RUNOFF	Public Works Code art.4.2 sec.146	SSp1	Submit a construction site Erosion and Sedimentation Control Plan to SFPUC for approval.	if project disturbs ≥5,000 sq.ft.	if project disturbs ≥5,000 sq.ft.	if project disturbs ≥5,000 sq.ft.	
INDOOR ENVIRONMENTAL QUALITY	ACOUSTICAL CONTROL	CALGreen 5.507.4.1-3	EQc9	Comply with sound transmission limits (STC-50 exteriors near freeways/airports; STC-45 exteriors if 65db Leq at any time; STC-40 interior walls/floor-ceilings between tenants).	•	limited to envelope alterations & additions	•	
INDOOR ENVIRONMENTAL QUALITY	AIR FILTRATION (CONSTRUCTION)	CALGreen 5.504.1-3	EQc3	Seal permanent HVAC ducts/equipment stored onsite before installation.	•	•	•	
INDOOR ENVIRONMENTAL QUALITY	AIR FILTRATION (OPERATIONS)	CALGreen 5.504.5.3		Provide MERV-8 filters on HVAC for regularly occupied, actively ventilated spaces.	•	•	•	
INDOOR ENVIRONMENTAL QUALITY	ENHANCED IAQ STRATEGIES	Environment Code sec.706	EQc1	Comply with entry, cross-contamination, filtration, natural ventilation, mixed-mode requirements.	LEED EQc1 (1 pt)	LEED EQc1 (1 pt)	*n/r*	
INDOOR ENVIRONMENTAL QUALITY	CONSTRUCTION IAQ MANAGEMENT PLAN	Environment Code sec.706	EQc3	During construction, meet SMACNA IAQ guidelines; provide MERV-8 filters on all HVAC.	LEED EQc3	LEED EQc3	*n/r*	
INDOOR ENVIRONMENTAL QUALITY	IAQ ASSESSMENT	Environment Code sec.706	EQc4	Before occupancy, test air quality for particulates, ozone, CO, and all listed VOCs.	LEED EQc4 (2 pts)	LEED EQc4 (2 pts)	*n/r*	

VERIFICATION

PROJECT NAME

BLOCK/LOT

ADDRESS

PRIMARY OCCUPANCY

BUILDING GROSS FLOOR AREA

LEED PROJECTS

Projects ≥10,000 square feet

I understand Environment Code Chapter7 requires all applicable projects ≥10,000 square feet to attain LEED Gold certification from USGBC/GBCI. No Green Building Compliance Professional of Record is required.

PROJECT MANAGER *(name)*

PROJECT MANAGER *(sign & date)*

PROJECT MANAGER AGENCY

NON-LEED PROJECTS

Projects <10,000 square feet, receiving a waiver, or not meeting LEED MPR's

This project is not required to obtain LEED certification because it is <10,000 square feet, does not meet LEED Minimum Program Requirements, and/or received a waiver from Environment Code Chapter 7 from the Director of Department of Environment. An informational LEED scorecard will be submitted to the Municipal Green Building Task Force at 100% concept design and as-built without requirement for further LEED documentation or certification.

PROJECT MANAGER *(name)*

PROJECT MANAGER *(sign & date)*

PROJECT MANAGER AGENCY

Green Building Compliance Professional of Record

I have been retained by the project sponsor to review all submittal documents and verify that all approved construction documents and construction fulfill the requirements of the San Francisco Green Building Code. It is my professional opinion that the requirements of the San Francisco Green Building Code will be met. I will notify the Department of Building Inspection if the project will, for any reason, not substantially comply with these requirements, if I am no longer the Green Building Compliance Professional of Record for the project, or if I am otherwise no longer responsible for assuring the compliance of the project with the San Francisco Green Building Code.

LICENSED PROFESSIONAL *(sign & date)*

AFFIX STAMP BELOW:

BUREAU OF ARCHITECTURE

SAN FRANCISCO PUBLIC WORKS

Ron Alameida - City Architect

Julia Laue - Principal Architect / Bureau Manager

49 S Van Ness Ave., Suite 1100, San Francisco, CA 94103
Phone (628)271-2865

Golden Gate Park Golf Clubhouse

970 47th Avenue
San Francisco, CA 94121

Consultant

95% CD 11.16.2020

No.	Date	Revisions

PM Noah Levy

PA Paul DeFreitas

Drawn Author

Checked Checker

NOT FOR CONSTRUCTION

Drawing Title

GREEN BUILDING FORMS

Sheet No. G1.20

Scale:

Project No. 1804

Original Sheet Size: 22"x34"

C:\Users\eharriso\Documents\1804_GGP_GC_CLUBHOUSE_R18_eharriso.rvt
11/2/2020 6:16:55 PM

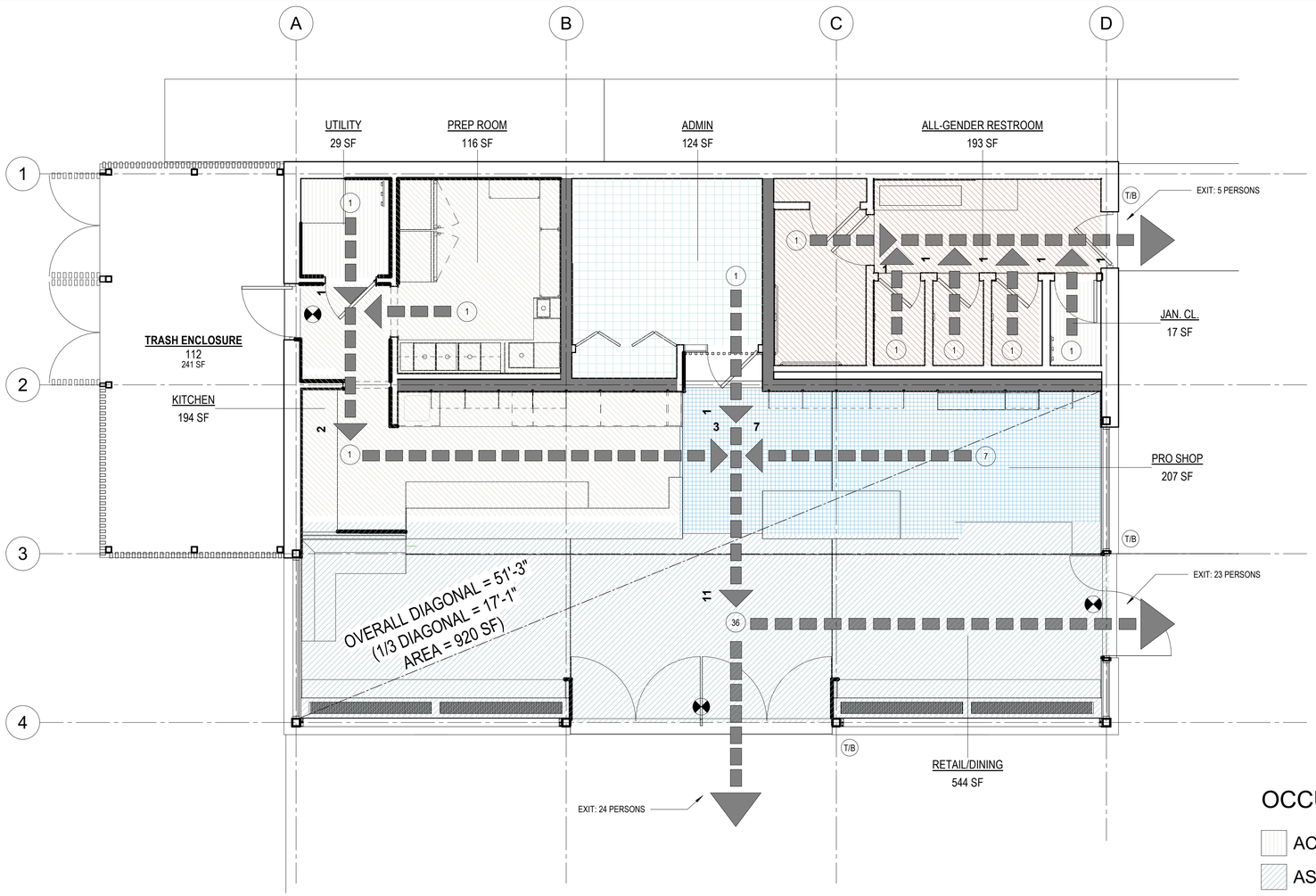

1 OCCUPANCY LOAD DIAGRAM

1/4" = 1'-0"

SIGNAGE LEGEND

EXIT SIGN

T/B TACTILE/BRAILLE SIGN

OCCUPANCY GROUP LEGEND

- ACCESSORY STORAGE AREAS, MECH. EQUIP. ROOM
- ASSEBLY - UNCONCENTRATED (CHAIRS AND TABLES)
- BUSINESS AREAS
- KITCHENS - COMMERCIAL
- MERCHANTILE - BASEMENT AND GRADE FLOOR AREAS
- RESTROOM
- Calculating...

OCCUPANCY LOAD ANALYSIS

NAME	OCCUPANCY LOAD FACTOR	AREA	OCCUPANCY LOAD OF SPACE
ACCESSORY STORAGE AREAS, MECH. EQUIP. ROOM			
UTILITY	300 SF	29 SF	1
JAN. CL.	300 SF	17 SF	1
ASSEBLY - UNCONCENTRATED (CHAIRS AND TABLES)			
RETAIL/DINING	15 SF	544 SF	36
BUSINESS AREAS			
ADMIN	150 SF	124 SF	1
KITCHENS - COMMERCIAL			
PREP ROOM	200 SF	116 SF	1
KITCHEN	200 SF	194 SF	1
MERCHANTILE - BASEMENT AND GRADE FLOOR AREAS			
PRO SHOP	30 SF	207 SF	7
RESTROOM			
ALL-GENDER RESTROOM	50 SF	193 SF	4
		1425 SF	52

BUREAU OF ARCHITECTURE

SAN FRANCISCO PUBLIC WORKS

Ron Alameida - City Architect

Julia Laue - Principal Architect / Bureau Manager

49 S Van Ness Ave., Suite 1100, San Francisco, CA 94103
Phone (628)271-2865

Golden Gate Park Golf Clubhouse

970 47th Avenue
San Francisco, CA 94121

Consultant

95% CD 11.16.2020

No.	Date	Revisions

PM Noah Levy

PA Paul DeFreitas

Drawn Author

Checked Checker

NOT FOR CONSTRUCTION

Drawing Title

LIFE SAFETY/OCCUPANCY LOAD DIAGRAM

Sheet No.

G2.10

Scale: As indicated

Project No.

1804

C:\Users\eharriso\Documents\1804_GGP_GC_CLUBHOUSE_R18_eharriso.rvt
11/2/2020 6:18:58 PM

Original Sheet Size: 22"x34"

BUREAU OF ARCHITECTURE

SAN FRANCISCO PUBLIC WORKS

Ron Alameida - City Architect

Julia Laue - Principal Architect / Bureau Manager

49 S Van Ness Ave., Suite 1100, San Francisco, CA 94103
Phone (628)271-2865

Golden Gate Park Golf Clubhouse

970 47th Avenue
San Francisco, CA 94121

Consultant

95% CD 11.16.2020

No.	Date	Revisions

PM Noah Levy

PA Paul DeFreitas

Drawn Author

Checked Checker

NOT FOR CONSTRUCTION

Drawing Title

ACCESSIBILITY DIAGRAMS

Sheet No.

G2.20X

Scale:

Project No.

1804

C:\Users\eharriso\Documents\1804_GGP_GC_CLUBHOUSE_R18_eharriso.rvt
11/22/2020 6:18:59 PM

Original Sheet Size: 22"x34"

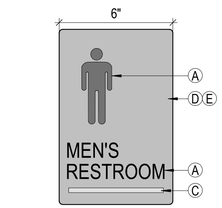

A. MEN'S RESTROOM SIGN

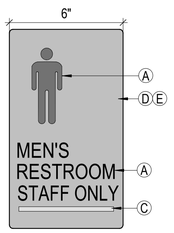

C. MEN'S STAFF RESTROOM SIGN

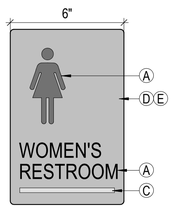

E. WOMEN'S RESTROOM SIGN

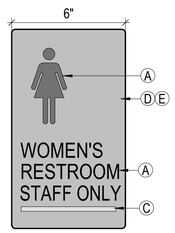

G. WOMEN'S STAFF RESTROOM SIGN

I. ALL GENDER RESTROOM SIGN

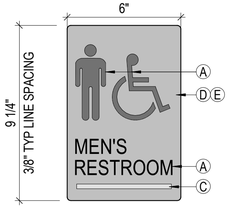

B. MEN'S RESTROOM SIGN

D. MEN'S STAFF RESTROOM SIGN

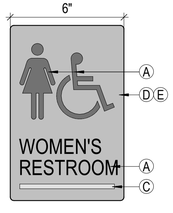

F. WOMEN'S RESTROOM SIGN

H. WOMEN'S STAFF RESTROOM SIGN

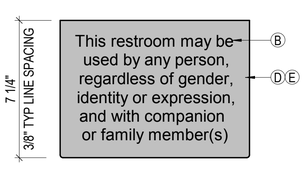

J. ALL GENDER RESTROOM SIGN - OPTIONAL

4 RESTROOM SIGNAGE

3" = 1'-0"

DAC CUSTOM 2019.08.01

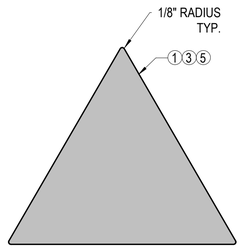

A. MEN'S GEOMETRIC SYMBOL

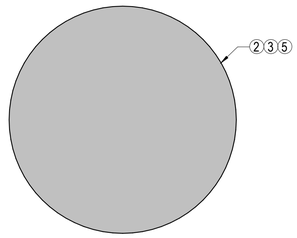

B. WOMEN'S GEOMETRIC SYMBOL

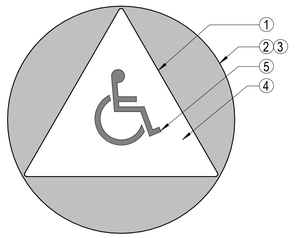

C. ALL-GENDER GEOMETRIC SYMBOL

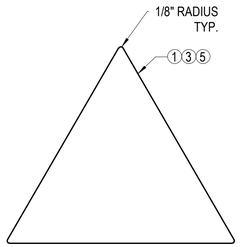

A. MEN'S GEOMETRIC SYMBOL

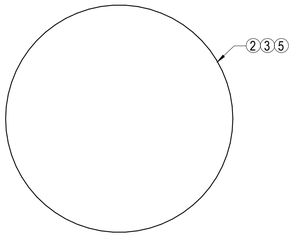

B. WOMEN'S GEOMETRIC SYMBOL

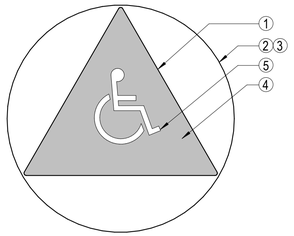

C. ALL-GENDER GEOMETRIC SYMBOL

NOTES FOR LIGHT OR DARK COLORED DOORS OR WALLS:

1. TRIANGULAR SIGN MATERIAL SHALL BE 1/4" THICK WITH POLISHED AND EASED EDGES. ADHERE SIGN TO DOOR WITH NON-STAINING SILICONE SEALANT AND FOAM TAPE WITHOUT ANY MECHANICAL FASTENERS,UON. SEE SIGNAGE SCHEDULE FOR MATERIALS.
2. CIRCULAR SIGN MATERIAL SHALL BE 1/4" THICK WITH POLISHED AND EASED EDGES. ADHERE SIGN TO DOOR WITH NON-STAINING SILICONE SEALANT AND FOAM TAPE WITHOUT ANY MECHANICAL FASTENERS, UON. SEE SIGNAGE SCHEDULE FOR MATERIALS.
3. SIGN SHALL BE LIGHT ON DARK OR DARK ON LIGHT BACKGROUND COLOR WITH ADJACENT DOOR, SIGN SURFACES, OR WALL. ALL SIGNAGE FINISHES SHALL BE NON-GLARE MATTE OR EGGSHELL.
4. ALL GENDER SIGN SHALL BE A 1/4" THICK TRIANGULAR SHEET (A) SECURED ON TOP OF CIRCULAR SHEET (B) WITH DOUBLE-SIDED SHEET TAPE. UON, COLOR SHALL BE LIGHT ON DARK OR DARK ON LIGHT AND THE CIRCLE SHALL CONTRAST PER NOTE C.
5. PROVIDE ISA SYMBOL ON SIGNS AT ACCESSIBLE ALL-GENDER TOILET ROOMS.

5 RESTROOM DOOR GEOMETRIC SYMBOL

3" = 1'-0"

DAC APPROVED R06 2019.08.01

2 BABY CHANGE SIGNS

3" = 1'-0"

DAC CUSTOM 2019.08.01

A. BABY CHANGING SIGN AT INDICATED LOCATION

B. BABY CHANGING SIGN

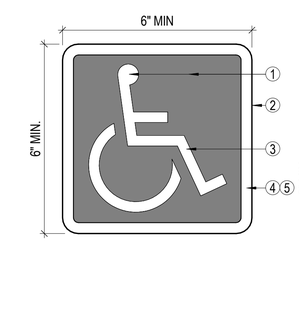

ISA SYMBOL

NOTES:

1. STANDARD COLORS ARE WHITE FIGURE ON BLUE BACKGROUND APPROXIMATING FEDERAL STANDARD 595C - F3 15000. NON-TACTILE UON.

   COLOR EXCEPTIONS:
   1A. ON TOILET AND BATHING ROOM DESIGNATION SIGNS OR WHEN APPROVED BY THE CITY REPRESENTATIVE.

   1B. FUNCTION BUTTON ON DESIGNATED ORIENTED ELEVATOR SYSTEM - BACKGROUND SHALL BE BLACK.

   1D. THE APPROPRIATE CITY REPRESENTATIVE MAY APPROVE OTHER COLORS PROVIDED THE SYMBOL CONTRAST IS LIGHT ON DARK OR DARK ON LIGHT

   1E. ON THE ACCESSBILITY FUNCTION BUTTON ON HALL CALL CONSOLES IN A DESTINATION-ORIENTED ELEVATOR SYSTEM THE INTERNATION SYMBOL OF ACCESSIBILITY SHALL BE A WHITE SYMBOL ON A BLACK BACKGROUND.
2. EXCEPTIONS FOR SIZE ON EVACUATION MAPS, POWERED DOOR ACTIVATOR SWITCHES, AND ASSEMBLY SEATING.
3. STYLE OF FIGURE SHALL COMPLY WITH THAT IN BLDG CODE AND FACE TO RIGHT. A BORDER IS PERMITTED INSIDE OR OUTSIDE MIN REQUIRED ISA DIM.
4. SIGNS ON NON-GLASS SURFACES SHALL BE BAKED ENAMEL ON METAL AND MECHANICALLY FASTENED.
5. SIGNS ON GLASS SHALL BE OPAQUE VINYL AND READABLE FROM BOTH SIDES OR HAVE WHITE OR BLACK BACKING W/O EXPOSED AIR BUBBLES.

3 INTERNATIONAL SYMBOL OF ACCESSIBILITY

6" = 1'-0"

DAC APPROVED R06 2019.08.01

ROOM IDENTIFICATION SIGN NOTES:

TOILET ROOM SIGNS SHALL BE MOUNTED AS SHOWN IN DETAIL 1 ON THIS SHEET.

VERIFY LOCATION OF BABY CHANGING SIGNS 4/A & 4/B WITH CITY REPRESENTATIVE IN FIELD.

A. TACTILE CHARACTERS AND TEXT
   I. CHARACTER SHALL BE RAISED 1/32" MIN ABOVE THE BACKGROUND. SIGN COLOR SHALL CONTRAST WITH ITS BACKGROUND, LIGHT ON DARK OR DARK ON LIGHT.
   II. CHARACTERS SHALL BE UPPER CASE, SAN SERIF. CHARACTERS SHALL NOT BE ITALIC, OBLIQUE, SCRIPT, HIGHLY DECORATIVE, OR OF OTHER UNUSUAL FORMS.
   III. CHARACTER PROPORTIONS, HEIGHT, STROKE, THICKNESS, SPACING AND LINE SPACING SHALL COMPLY WITH CBC 11B-703.2 RAISED CHARACTERS REQUIREMENTS. CHARACTERS SHALL BE 3/4" HEIGHT AND FORMATTED HORIZONTALLY, UON.

B. NON-TACTILE CHARACTERS AND TEXT
   I. SHALL COMPLY WITH NOTE A, PARAGRAPHS II AND III AND WITH NOTES D AND E.

C. BRAILLE (SEE PROJECT SPECIFICATIONS FOR APPROVAL)
   I. BRAILLE SHALL BE CONTRACTED GRADE 2 BRAILLE TRANSLATION OF THE TEXT AND BE POSITIONED BELOW THE CORRESPONDING TEXT HORZONTALLY. CENTER JUSTIFY BRAILLE ON SIGN, UON.
   II. BRAILLE DOTS SHALL BE DOMED OR ROUNDED. SPACING SHALL CONFORM TO CBC 11B-703.3.
   III. ALL BRAILLE OT BE VERIFIED AND APPROVED BY LIGHTHOUSE FOR THE BLIND.

D. MATERIAL & FINISH
   I. 1/4" THICK SOLID MELAMINE SHEET UON, EASED OR ROUNDED EDGES, CORNERS, AND VERTICES AT 1/16" MIN OR CHAMFERED AT 1/8" MAX.
   I. NON-GLARE, MATTE OR EGGSHELL, UON
   II. THE COLOR OF THE SIGN SHALL CONTRAST W/ THE BACKGROUND LIGHT ON DARK OR DARK ON LIGHT DOORS OR WALLS.

E. MOUNTING
   I. INTERIOR SIGNS SHALL BE ADHERED TO DOOR OR WALL WITH NON-STAINING SILICONE SEALANT AND FOAM TAPE WITHOUT MECHANICAL FASTENERS, UON. EXTERIOR SIGNS SHALL BE MECHANICALLY FASTENED AND WITH SILICONE ADHESIVE. FASTENERS SHALL BE STAINLESS STEEL AND TAMPER PROOF.

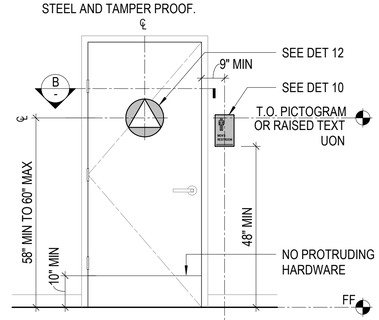

A. EXTERIOR DOOR ELEVATION NTS

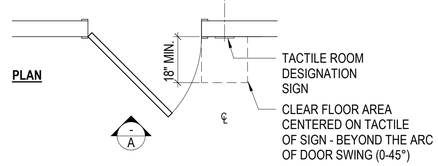

PLAN

B. CLEAR FLOOR AREA REQUIREMENTS - NTS

SIGN MOUNTING LOCATIONS (IN ORDER OF PREFERENCE):

1. WALL MOUNT ADJACENT TO LATCH SIDE OF DOOR.
2. INACTIVE LEAF OF A DOUBLE DOOR WITH A SINGLE ACTIVE LEAF.
3. THE RIGHT DOOR OF A DOUBLE DOOR WITH 2 ACTIVE LEAFS.
4. WHERE THERE IS NO WALL SPACE ON THE LATCH SIDE OF A SINGLE DOOR OR RIGHT SIDE OF A DOUBLE DOOR, SIGN SHALL BE LOCATED ON THE NEAREST ADJACENT WALL - COORDINATE LOCATION WITH CITY REPRESENTATIVE.

1 TOILET OR BATHING ROOM ENTRANCE SIGNS

1/2" = 1'-0"

DAC APPROVED R06 2019.08.01

BUREAU OF ARCHITECTURE

SAN FRANCISCO PUBLIC WORKS

Ron Alameida - City Architect

Julia Laue - Principal Architect / Bureau Manager

30 Van Ness Ave., Suite 4100, San Francisco, CA 94102
Fax (415)557-4701, Phone (415)557-4700

Golden Gate Park Golf Clubhouse

970 47th Avenue
San Francisco, CA 94121

Consultant

Design Development 11.16.2020

No.	Date	Revisions

PM
PA Noah Levy
Drawn Paul DeFreitas
Checked CCS
VV

NOT FOR CONSTRUCTION

Drawing Title

TOILET ROOM DOOR SIGNAGE

Sheet No.

G3.11

Scale: As indicated

Project No.

1804

Original Sheet Size: 22"x34"

C:\Users\eharriso\Documents\1804_GGP_GC_CLUBHOUSE_R18_eharriso.rvt
1/22/2020 6:19:01 PM

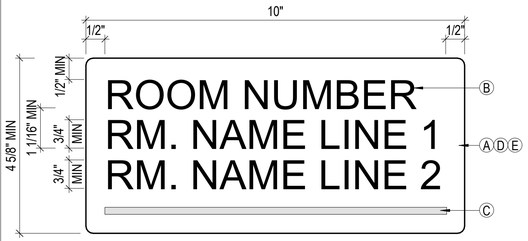

A. THREE LINES OF TEXT

10 3 - LINE SIGN

6" = 1'-0" **DAC APPROVED R06 2019.08.01**

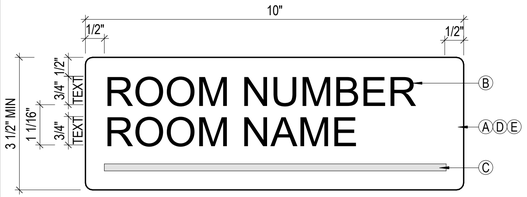

B. TWO LINES OF TEXT

11 2 - LINE SIGN

6" = 1'-0" **DAC APPROVED R06 2019.08.01**

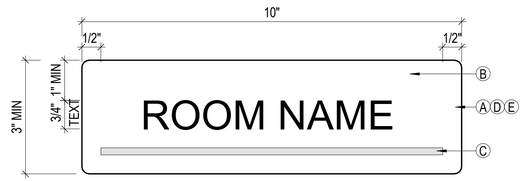

B. SINGLE LINE OF TEXT

NOTES:

1. REFER TO SIGNAGE SCHEDULE FOR TEXT.

12 TACTILE ROOM NAME SIGN

6" = 1'-0" **DAC APPROVED R06 2019.08.01**

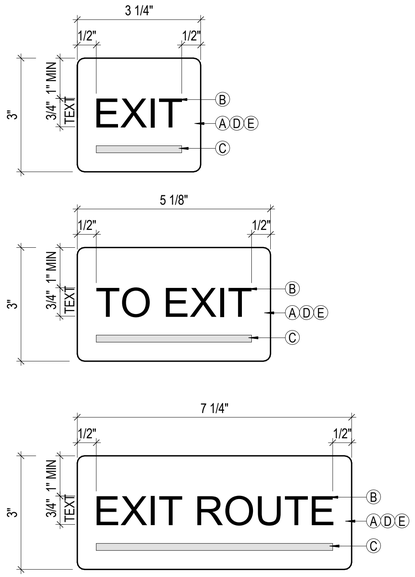

7 TACTILE EXIT DOOR SIGNS

6" = 1'-0" **DAC APPROVED R06 2019.08.01**

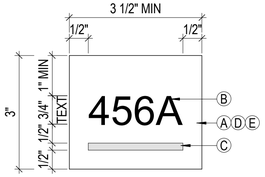

NOTES:

1. REFER TO SIGNAGE SCHEDULE FOR TEXT.

8 ROOM ID SIGN

6" = 1'-0" **DAC APPROVED R06 2019.08.01**

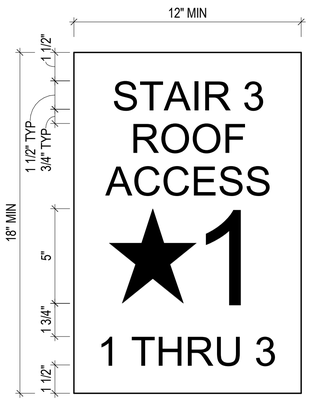

NON-TACTILE STAIRWAY ID NOTES:

1. STAIRWAY IDENTIFICATION SIGNS ARE REQUIRED IN STAIRWAYS CONNECTING MORE THAN THREE STORIES.
2. THE SIGN SHALL BE PROVIDED ON EACH STAIRWAY LANDING.
3. SEE SIGN SCHEDULE FOR STAIR NUMBERING AND DESIGNATION OF TERMINUS OR ROOF ACCESS.
4. PROVIDE A FIVE POINT STAR FOR EGRESS FLOOR NUMBER. DESIGNATE MEZZANINES AS THE LETTER 'M' AND DESIGNATE BASEMENTS AS THE LETTER 'B'.
5. SIGN PANEL IS 3/16" THICK, SEE SIGN SCHEDULE FOR SIGN MATERIAL AND COLOR.
6. SIGN SHALL BE PHOTO LUMINESCENT PER 1025.4.
7. TEXT SHALL BE SAN SERIF BLACK SIZE AS SHOWN IN DETAIL.

13 STAIRWAY IDENTIFICATION SIGN

3" = 1'-0" **DAC APPROVED R06 2019.08.01**

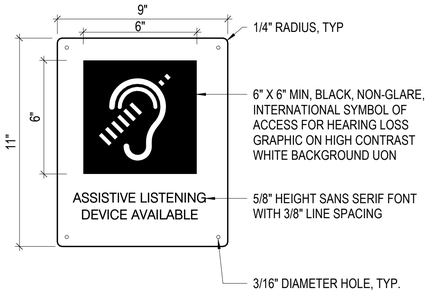

ASSISTIVE LISTENING DEVICE NOTES:

1. USE STAINLESS STEEL VANDAL RESISTANT FASTENERS.
2. SIGNS SHALL BE NON-REFLECTIVE AND NON-TACTILE.
3. TEXT SHALL BE SAN SERIF FONT.
4. GRAPHIC FIELD 6" X 6" MINIMUM IN AREA.
5. GRAPHIC AND BACKGROUND: LIGHT-ON-DARK OR DARK-ON-LIGHT
   USE THE FOLLOWING COLORS:
   WHITE: WHITE COLOR NO. 17875 IN FEDERAL STANDARD 595B
   BLACK: NO 17038 IN FEDERAL STANDARD 595B
6. TEXT FORMAT IS HORIZONTAL.
7. 1" CLEARANCE AROUND ALL BORDERS BETWEEN EDGE OF SIGN AND CHARACTERS OR GRAPHIC.

4 ASSISTIVE LISTENING DEVICE SIGN

3" = 1'-0" **DAC CUSTOM 2019.08.01**

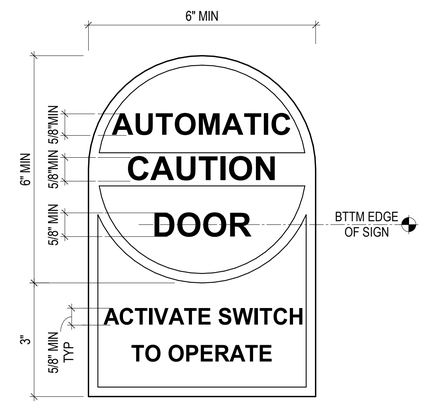

POWER DOOR CAUTION SIGNAGE NOTES:

1. UNLESS OTHERWISE NOTED, BACKGROUND COLOR SHALL BE BLACK. TEXT AND GRAPHICS YELLOW.
2. UNLESS OTHERWISE NOTED, BACKGROUND COLOR SHALL BE YELLOW, TEXT AND GRAPHICS BLACK.
3. IF 'KNOWING ACT' OR 'ACTIVE SWITCH TO OPERATE' SWITCH IS USED TO INITIATE DOOR OPERATION, BACKGROUND COLOR SHALL BE BLUE. TEXT AND GRAPHICS SHALL BE WHITE AND THE LETTERS SHALL BE 5/8" HIGH MIN.
4. VINYL STICKER SHALL BE MOUNTED ON BOTH SIDES OF DOOR 50" +/-12" FROM THE FINISHED FLOOR TO THE CENTERLINE OF THE SIGN.
5. PROVIDE ISA SIGN SHEET G3.11 DETAIL 6 ON BOTH SIDES OF DOOR OR IMMEDIATELY ADJACENT WINDOW.

6 POWERED DOOR SIGN

6" = 1'-0" **DAC APPROVED R06 2019.08.01**

TACTILE EXIT SIGNAGE NOTES:

WALL AND TOILET ROOM SIGNS SHALL BE MOUNTED AS SHOWN IN DETAIL 3 ON THIS SHEET.

VERIFY LOCATION OF ASSSITIVE LISTENING DEVICE SIGN 4/A & 4/B WITH CITY REPRESENTATIVE IN FIELD.

A. TACTILE CHARACTERS AND TEXT
   I. CHARACTER SHALL BE RAISED 1/32" MIN ABOVE THE BACKGROUND. SIGN COLOR SHALL CONTRAST WITH ITS BACKGROUND, LIGHT ON DARK OR DARK ON LIGHT.
   II. CHARACTERS SHALL BE UPPER CASE, SAN SERIF. CHARACTERS SHALL NOT BE ITALIC, OBLIQUE, SCRIPT, HIGHLY DECORATIVE, OR OF OTHER UNUSUAL FORMS.
   III. CHARACTER PROPORTIONS, HEIGHT, STROKE, THICKNESS, SPACING SHALL COMPLY WITH CBC 11B-703.2 RAISED CHARACTERS REQUIREMENTS. CHARACTERS SHALL BE 3/4" HEIGHT AND FORMATTED HORIZONTALLY, UON.

B. NON-TACTILE CHARACTERS AND TEXT
   I. SHALL COMPLY WITH NOTE A, PARAGRAPHS II AND III AND WITH NOTES D AND E.

C. BRAILLE (SEE PROJECT SPECIFICATIONS FOR APPROVAL)
   I. BRAILLE SHALL BE CONTRACTED GRADE 2 BRAILLE TRANSLATION OF THE TEXT AND BE POSITIONED BELOW THE CORRESPONDING TEXT HORZONTALLY. CENTER JUSTIFY BRAILLE ON SIGN, UON.
   II. BRAILLE DOTS SHALL BE DOMED OR ROUNDED. SPACING SHALL CONFORM TO CBC 11B-703.3.

D. MATERIAL & FINISH
   I. 1/4" THICK SOLID MELAMINE SHEET UON, EASED OR ROUNDED EDGES, CORNERS, AND VERTICES AT 1/16" MIN OR CHAMFERED AT 1/8" MAX.
   I. NON-GLARE, MATTE OR EGGSHELL, UON
   II. THE COLOR OF THE SIGN SHALL CONTRAST W/ THE BACKGROUND LIGHT ON DARK OR DARK ON LIGHT DOORS OR WALLS.

E. MOUNTING
   I. INTERIOR SIGNS SHALL BE ADHERED TO DOOR OR WALL WITH NON-STAINING SILICONE SEALANT AND FOAM TAPE WITHOUT MECHANICAL FASTENERS, UON. EXTERIOR SIGNS SHALL BE HELD IN PLACE WITH SILICONE ADHESIVE AND MECHANICALLY FASTENED. FASTENERS SHALL BE STAINLESS STEEL AND TAMPER PROOF.

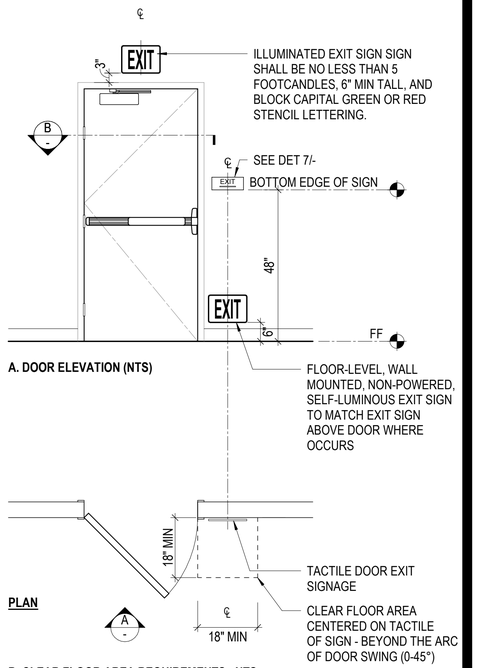

A. DOOR ELEVATION (NTS)

PLAN

B. CLEAR FLOOR AREA REQUIREMENTS - NTS

SIGN MOUNTING LOCATIONS (IN ORDER OF PREFERENCE):

1. WALL MOUNT ADJACENT TO LATCH SIDE OF DOOR.
2. INACTIVE LEAF OF A DOUBLE DOOR WITH A SINGLE ACTIVE LEAF.
3. THE RIGHT DOOR OF A DOUBLE DOOR WITH 2 ACTIVE LEAFS.
4. WHERE THERE IS NO WALL SPACE ON THE LATCH SIDE OF A SINGLE DOOR OR RIGHT SIDE OF A DOUBLE DOOR, SIGN SHALL BE LOCATED ON THE NEAREST ADJACENT WALL - COORDINATE LOCATION WITH CITY REPRESENTATIVE.

3 EXIT SIGNAGE LOCATIONS

1/2" = 1'-0" **DAC APPROVED R06 2019.08.01**

BUREAU OF ARCHITECTURE

SAN FRANCISCO PUBLIC WORKS

Ron Alameida - City Architect

Julia Laue - Principal Architect / Bureau Manager

30 Van Ness Ave., Suite 4100, San Francisco, CA 94102
Fax (415)557-4701, Phone (415)557-4700

Golden Gate Park Golf Clubhouse

970 47th Avenue
San Francisco, CA 94121

Consultant

Design Development 11.16.2020

No.	Date	Revisions

PM Noah Levy
PA Paul DeFreitas
Drawn Author
Checked Checker

NOT FOR CONSTRUCTION

Drawing Title

DOOR EXIT SIGNAGE

Sheet No.

G3.12

Scale: As indicated

Project No.

1804

Original Sheet Size: 22"x34"

C:\Users\eharriso\Documents\1804_GGP_GC_CLUBHOUSE_R18_eharriso.rvt
11/2/2020 6:19:02 PM

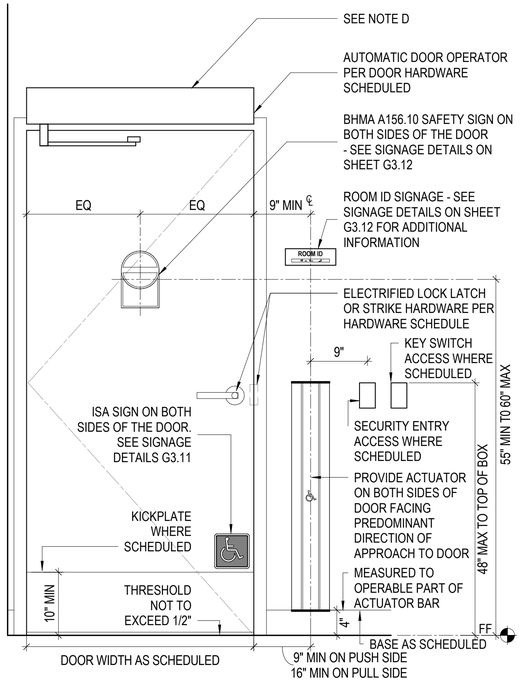

10 POWERED OPERATOR HARDWARE

1" = 1'-0" DAC APPROVED R06 2019.08.01

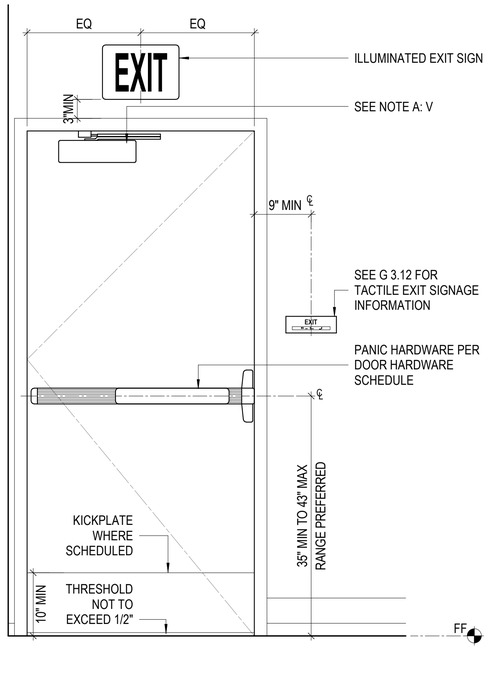

7 EXIT DOOR HARDWARE

1" = 1'-0" DAC APPROVED R06 2019.08.01

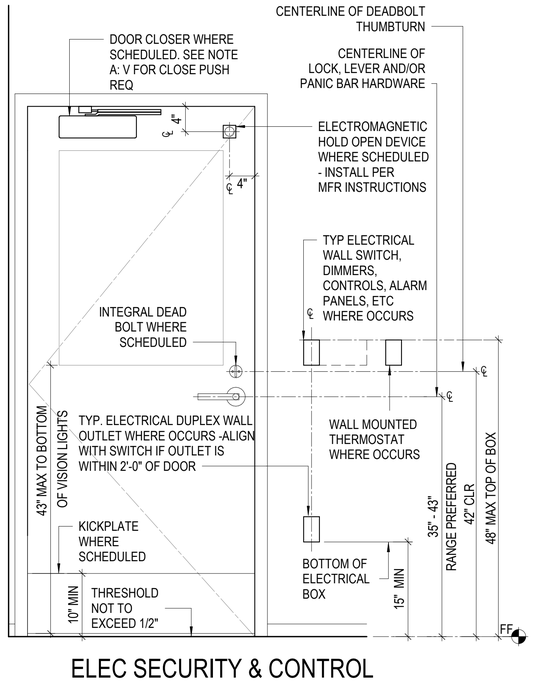

4 ELEC SECURITY & CONTROL HARDWARE

1" = 1'-0" DAC APPROVED R06 2019.08.01

TYP DOOR AND GATE ACCESSIBILITY REQUIREMENTS:

ALL ENTRANCE DOORS, DOORS ON ACCESSIBLE ROUTES, EXIT DOORS AND GATES SHALL COMPLY WITH TITLE 24 CALIFORNIA BUILDING CODE (CBC) AND AS SUPERSEDED HEREIN, UNLESS OTHERWISE MODIFIED IN THE CONSTRUCTION DOCUMENTS.

A. ACCESSIBLE DOORS AND GATES:

I. **CLEARANCES**.

DOORS AND GATES SHALL BE CAPABLE OF AN OPENING SWEEP OF 90 DEGREES MIN. THE CLEAR OPENING AT DOORS AND GATES SHALL BE 32" MIN FROM FACE OF DOOR JAMB STOP TO FACE OF DOOR WHEN OPENED TO 90 DEGREE POSITION, UON.

II. **THRESHOLDS.** TOP OF THRESHOLDS SHALL NOT EXCEED 1/2" AFF FLOOR, CARPET FINISH, OR CONCRETE. CHANGES IN LEVEL OF 1/4" MAX HIGH SHALL BE PERMITTED TO BE VERTICAL. CHANGES IN LEVEL BETWEEN 1/4" MIN TO 1/2" MAX SHALL BE BEVELED WITH A SLOPE NOT STEEPER THAN 1:2.THE SLOPE OF TOP SURFACE OF THRESHOLDS SHALL NOT EXCEED 1:20.

III. **LEVEL MANEUVERING CLEARANCES.**

FLOOR AREAS ON EITHER SIDE OF DOOR SHALL NOT EXCEED 1.8 PERCENT SLOPE IN ANY DIRECTION.

CHANGES IN LEVEL ARE NOT PERMITTED.

IV. **PUSH-SIDE KICK PLATE AREAS**

a. SWINGING DOOR AND GATE SURFACES WITHIN 10" OF THE FINISH FLOOR OR GROUND SHALL HAVE A SMOOTH SURFACE ON THE PUSH SIDE EXTENDING THE FULL WIDTH OF THE DOOR OR GATE.
b. ON GLASS DOORS, THE KICK PLATE AREA SHALL BE A MATERIAL OTHER THAN GLASS. PROTRUDING HINGE AND LOCKING PADS ARE TO BE PERMITTED IN THE KICK-PLATE AREA.
c. SURFACE MOUNTED BOLTS OR PROTRUDING RIMS OF CYLINDER LOCKS ARE NOT PERMITTED IN THIS AREA. PARTS CREATING HORIZONTAL OR VERTICAL JOINTS IN THIS SURFACE SHALL BE WITHIN 1/16" OF THE SAME PLANE AT THE OTHER, AND BE FREE OF SHARP OR ABRASIVE EDGES.
d. CAVITIES CREATED BY ADDED KICK PLATES SHALL BE CAPPED.

V. **FORCE FOR PUSHING OR PULLING OPEN A DOOR OR GATES**:

a. INTERIOR DOORS AND GATES: 5 LBS MAX
b. SLIDING OR FOLDING DOORS AND PEDESTRIAN-GATES: 5 LBS MAX.
c. REQUIRED FIRE DOORS: THE MIN OPENING FORCE ALLOWABLE BY THE APPROPRIATE ADMINISTRATIVE AUTHORITY, NOT TO EXCEED 15LBS MAX.
d. EXTERIOR HINGED DOORS: 5 LBS MAX.
e. AT POWERED DOORS, MANUAL DOOR LEAFS IN THE SAME LOCATION: 8 1/2 LBS MAX.
f. DOORS TO ROOMS FOR FACILITIES LISTED IN CBC 11B-203 GENERAL EXCEPTIONS ARE NOT REQUIRED TO COMPLY WITH THESE FORCE REQUIREMENTS.

VI. **CLOSING SPEED OR GATES**.

DOORS WITH AUTOMATIC CLOSERS SHALL BE ADJUSTED SO THAT FROM THE OPEN POSITION OF 90 DEGREES, THE TIME REQUIRED TO MOVE THE DOOR TO A POSITION TO 12 DEGREES FROM LATCH IS 5 SECONDS MIN SPRING HINGES SHALL BE ADJUSTED SO THAT FROM 70 DEGREES, THE DOOR OR GATE SHALL MOVE TO THE CLOSED POSITION IN 1.5 SECONDS.

B. RATED DOOR ASSEMBLIES.

SHALL BE POSITIVE LATCHING AND INCLUDE A CLOSER. RATED ASSEMBLIES SHALL COMPLY WITH CBC CHAPTER 10 REQUIREMENTS AND THOSE OF THE CONSTRUCTION DOCUMENTS AND SPECIFICATIONS.MANUFACTURER'S INSTALLATION INSTRUCTIONS SHALL BE AVAILABLE ON THE JOB SITE FOR ALL RATED DOOR ASSEMBLIES.

C. SAFETY GLAZING SAFETY.

GLAZING AT DOORS SHALL COMPLY WITH CBC CHAPTER 24. SECTION 2406 AND THE DRAWINGS.

D. POWERED DOORS.

I. POWERED DOORS SHALL COMPLY WITH EXCEPTIONS IN CBC 11B-404.2.9
II. POWERED DOORS ARE REQUIRED FOR PRIMARY PUBLIC AND EMPLOYEE ENTRANCES TO BUILDINGS AND FACILITES, UON. WHERE A PAIR OF DOORS OCCURS IN THAT ASSEMBLY, BOTH LEAFS SHALL BE POWERED.
III. POWERED DOORS ARE PERMITTED IN LIEU OF OPENING FORCES NOTED IN DOOR AND GATE REQUIREMENTS NOTE A.5. MANUAL FORCE ON POWERED DOOR PANELS IS 8 1/2 LBS.
IV. SAN FRANCISCO BUILDING DEPARTMENT INFORMATIONAL BULLETINS PERMISSIBLE USE OF POWERED DOORS IN ALTERATIONS IS ACCEPTED BY THESE REQUIREMENTS.
V. VERTICAL DOOR ACTUATORS ARE REQUIRED, AND ARE REQUIRED TO BE DIRECTLY WIRED TO DOOR OPERATOR UON. WHERE SENSING DEVICES ARE UTILIZED, A LOW PUSH PLATE SHALL BE PROVIDED UON.
VI. POWERED DOORS SHALL HAVE KEYED OR TOGGLE WALL SWITCH DISCONNECT IN THE NEAR VICINITY OF THE POWERED DOOR.
VII. POWERED DOOR HARDWARE, ACTUATORS AND DISCONNECT IS PERMITTED TO BE INTEGRATED WITH SECURITY SYSTEMS. OBTAIN AN OPERATIONAL NARRATIVE FROM THE CITY'S REPRESENTATIVE.
VIII. CBC 11B-404.2.9 EXCEPTIONS C, D AND E CONTAIN SIGNAGE REQUIREMENTS THAT ARE NOT COMPLETELY IDENTIFIED IN DETAILS SHOWN IN THE TYPICAL ACCESSIBLE DOOR AND GATE SHEET.

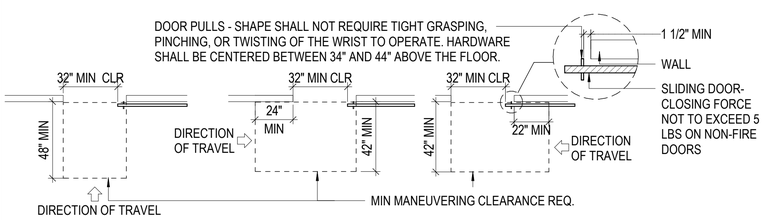

NOTE: MANUEVERING CLEARANCES ARE REQUIRED TO BE FREE OF PROTUSIONS UP TO 80" AFF

11 MANEUVERING CLEARANCE AT SLIDING & POCKET DOORS

1/4" = 1'-0" DAC APPROVED R06 2019.08.01

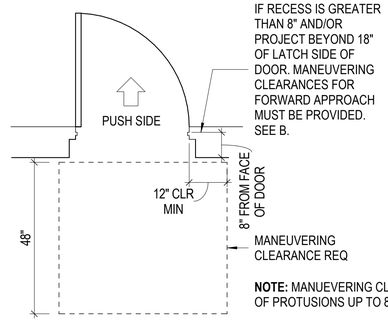

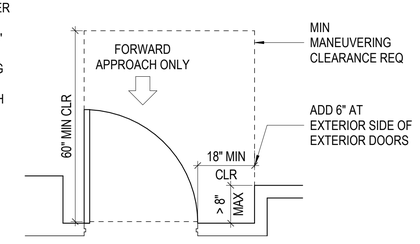

NOTE: MANUEVERING CLEARANCES ARE REQUIRED TO BE FREE OF PROTUSIONS UP TO 80" AFF

8 MANEUVERING CLEARANCE AT RECESSED DOOR

1/2" = 1'-0" DAC APPROVED R06 2019.08.01

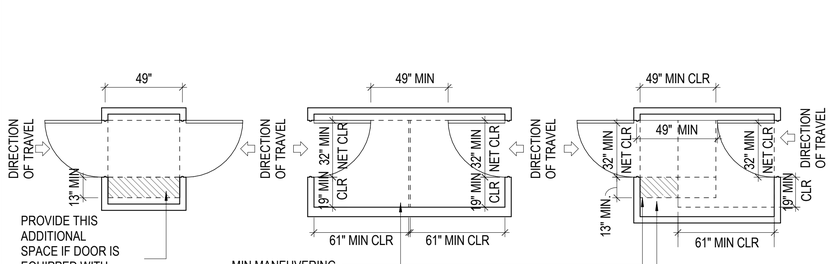

NOTE: MANUEVERING CLEARANCES ARE REQUIRED TO BE FREE OF PROTUSIONS UP TO 80" AFF

12 MANEUVERING CLEARANCE AT DOORS IN SERIES

1/4" = 1'-0" DAC APPROVED R06 2019.08.01

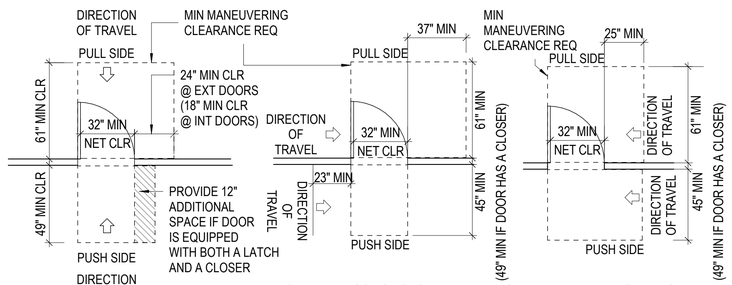

NOTE: THE FLOOR OR GROUND IN THE REQUIRED MANEUVERING AREA SHALL BE LEVEL AND CLEAR WHEN THE MANEUVERING AREA IS IN THE INTERIOR. WHEN THE MANEUVERING AREA IS IN THE EXTERIOR, IT MAY HAVE A SLOPE NOT TO EXCEED 1.8%

9 REQUIRED MANEUVERING CLEARANCES AT DOORS

1/4" = 1'-0" DAC APPROVED R06 2019.08.01

DAC APPROVED R06 2019.08.01

BUREAU OF ARCHITECTURE

SAN FRANCISCO PUBLIC WORKS

Ron Alameida - City Architect

Julia Laue - Principal Architect / Bureau Manager

30 Van Ness Ave., Suite 4100, San Francisco, CA 94102
Fax (415)557-4701, Phone (415)557-4700

Golden Gate Park Golf Clubhouse

970 47th Avenue
San Francisco, CA 94121

Consultant

Design Development 11.16.2020

No.	Date	Revisions

PM
PA Noah Levy
Drawn Paul DeFreitas
Checked CS
Checker

NOT FOR CONSTRUCTION

Drawing Title

TYPICAL ACCESSIBLE DOORS AND GATES

Sheet No.

G3.21

Scale: As indicated

Project No.

1804

Original Sheet Size: 22"x34"

C:\Users\eharriso\Documents\1804_GGP_GC_CLUBHOUSE_R18_eharriso.rvt
11/22/2020 6:19:03 PM

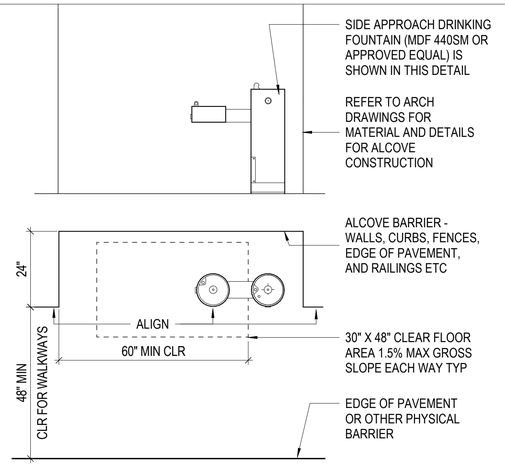

4 SIDE APPROACH DRINKING FOUNTAIN

1/2" = 1'-0"

DAC APPROVED R06 2019.08.01

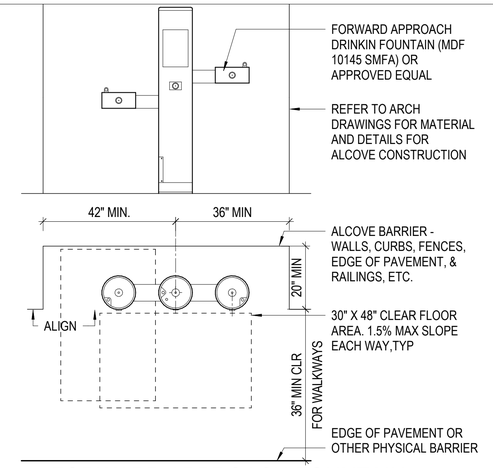

1 FORWARD APPROACH FOUNTAIN

1/2" = 1'-0"

DAC APPROVED R06 2019.08.01

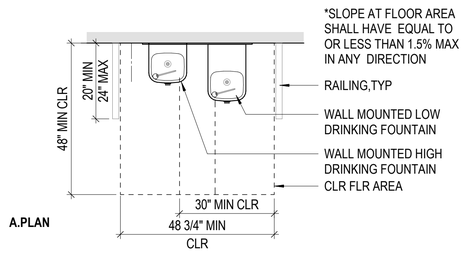

A.PLAN

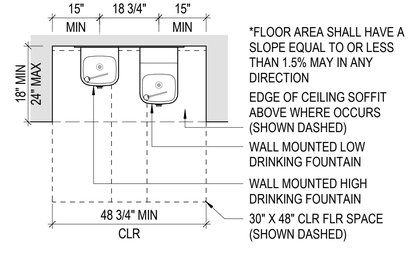

A.PLAN

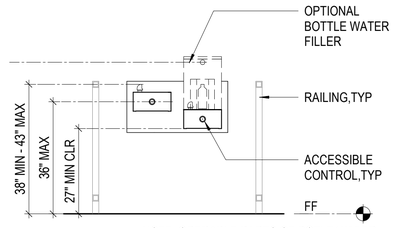

NOTE: OPERABLE PARTS OF BOTLE WATER FILLER SHALL BE WITHIN REACH RANGE COMPLYING WITH 11B.307

B.FRONT ELEVATION

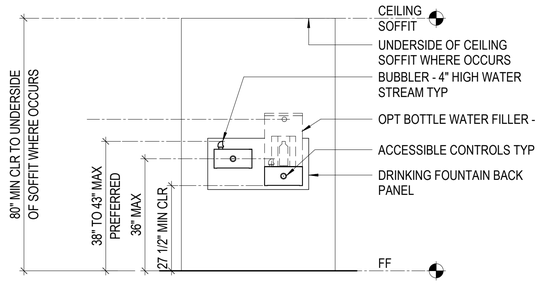

B.FRONT ELEVATION

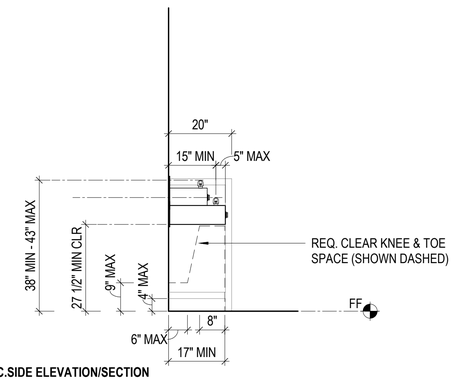

C.SIDE ELEVATION/SECTION

6 ACCESSIBLE DRINKING FOUNTAIN 4

1/2" = 1'-0"

DAC APPROVED R06 2019.08.01

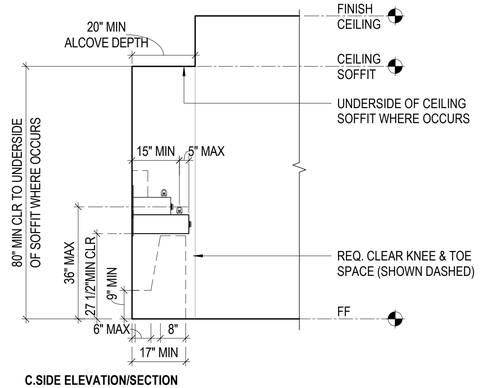

C.SIDE ELEVATION/SECTION

3 ACCESSIBLE DRINKING FOUNTAIN 1

1/2" = 1'-0"

DAC APPROVED R06 2019.08.01

DAC APPROVED R06 2019.08.01

Original Sheet Size: 22"x34"

BUREAU OF ARCHITECTURE

SAN FRANCISCO PUBLIC WORKS

Ron Alameida - City Architect

Julia Laue - Principal Architect / Bureau Manager

30 Van Ness Ave., Suite 4100, San Francisco, CA 94102
Fax (415)557-4701, Phone (415)557-4700

Golden Gate Park Golf Clubhouse

970 47th Avenue
San Francisco, CA 94121

Consultant

Design Development 11.16.2020

No.	Date	Revisions

PM Noah Levy
PA Paul DeFreitas
Drawn Author
Checked Checker

NOT FOR CONSTRUCTION

Drawing Title

ACCESSIBLE DRINKING FOUNTAIN & WALL & FLOOR ACCESSORIES

Sheet No. G3.31

Scale: 1/2" = 1'-0"

Project No. 1804

C:\Users\eharriso\Documents\1804_GGP_GC_CLUBHOUSE_R18_eharriso.rvt
11/2/2020 6:19:04 PM

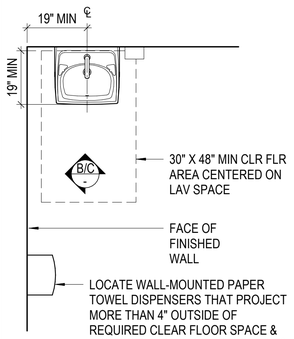

A. PLAN

*39" MAX HEIGHT AFF TO HIGHEST OPERABLE PART OR CONTROL

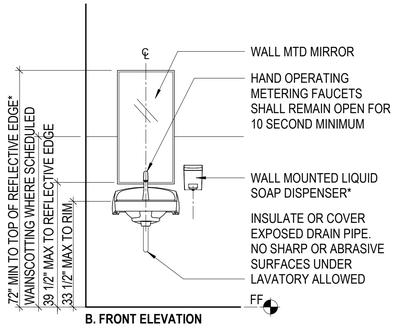

B. FRONT ELEVATION

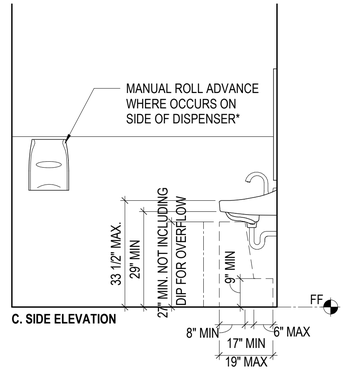

C. SIDE ELEVATION

10 WALL-MOUNTED LAVATORY WITH AUTOMATIC FAUCET

1/2" = 1'-0"

DAC APPROVED R06 2019.08.01

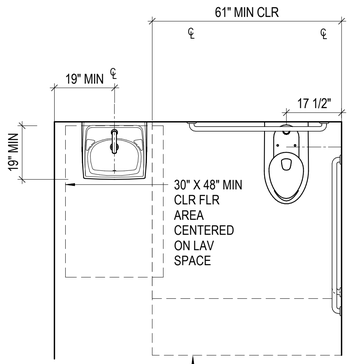

A. PLAN

B. FRONT ELEVATION

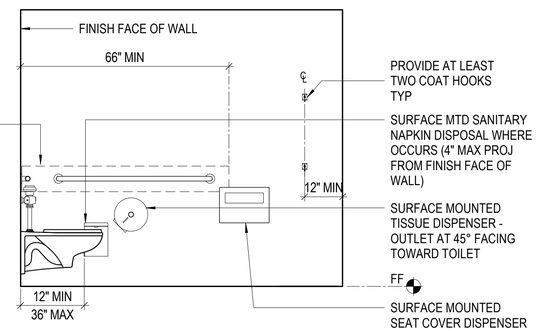

C. SIDE ELEVATION

11 WALL-MOUNTED TOILET

1/2" = 1'-0"

DAC APPROVED R06 2019.08.01

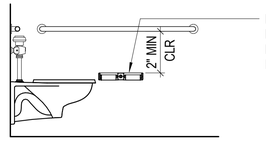

A. SURFACE MOUNTED DOUBLE ROLL DISPENSER

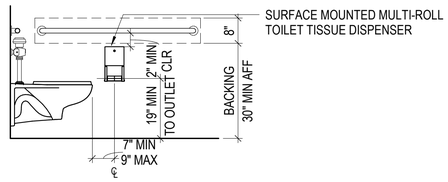

B. SURFACE MOUNTED MUTLI-ROLL DISPENSER

GENERAL TOILET AND BATHING ROOM ACCESSIBILITY NOTES:

1. THE MINIMUM, MAXIMUM, AND ABSOLUTE DIMENSIONS SHOWN IN THESE STANDARD DETAILS VARY FROM THOSE IN TITLE 24 CALIFONRIA BUILDING CODE AND/OR AMERICANS WITH DISABILITIES ACT 2010 ADA STANDARD (ADAAG). DIMENSIONS THAT ARE NOT STATED AS "MAXIMUM" OR "MAX" OR "MINIMUM" OR "MIN" ARE ABSOLUTE (1101B.4). ALL DIMENSIONS ARE SUBJECT TO CONVENTIONAL INDUSTRY TOLERANCES EXCEPT WHERE THE REQUIREMENT IS STATED AS A RANGE WITH SPECIFIC MINIMUM AND MAXIMUM END POINTS.
2. BATHING, LOCKER, AND CHANGING TOILET ROOMS SHALL CONTAIN A 60" DIAMETER MANEUVERING SPACE OR EQUIVALENT T-SHAPED SPACE. THE MANEUVERING SPACES ARE PERMITTED TO UNDERLAP SOME OBJECTS. TOE & KNEE SPACE AT ONLY ONE END OF EITHER THE BASE OR ONE AREA OF T-SHAPED SPACE. A DOOR IS PERMITTED TO UNDERLAP A TOILET ROOM'S REQUIRED MANEUVERING SPACE BY 12" MAX.
3. TOILET ROOMS ARE TO CONTAIN A CLEAR 44" MIN PATH TO WHEELCHAIR AND ACCESSIBLE TOILET COMPARTMENTS,EXCEPT FOR INTERVENING DOOR WIDTHS.
4. TRASH CAN IS NOT PERMITTED TO OCCUPY THE CLEAR FLOOR SPACE OF ANY FIXTURE OR DOOR.
5. DOORS ARE NOT PERMITTED TO ENCROACH ON THE REQUIRED CLEAR FLOOR SPACE AT ANY FIXTURE. EXCEPTION: WHERE THE TOILET OR BATHING ROOM IS FOR INDIVIDUAL USE AND A 30" X 48" CLEAR FLOOR SPACE IS PROVIDED WITHIN THE ROOM BEYOND THE ARC OF THE DOORS.
6. THE CLEAR FLOOR AREAS OF ANY FIXTURE, ACCESSIBLE ROUTE AND MANEUVERING SPACE ARE PERMITTED TO OVERLAP.
7. MOUNTING HEIGHT OF COUNTERS AND FIXTURES SHALL TAKE INTO ACCOUNT FLOOR SLOPE TO DRAIN.
8. FLOOR SLOPE TO DRAIN SHALL NOT EXCEED 1.5% IN ANY DIRECTION.
9. FIXTURE AND TOILET CLEARANCES ARE TO FACE OF FINISH.
10. NO ACCESSORIES OR COMBINATION UNITS ARE TO BE MOUNTED BEHIND OR ABOVE GRAB BARS.
11. THE REAR GRAB BAR SHALL BE PERMITTED TO BE 24 " MINIMUM LONG, CENTERED ON THE WATER CLOSET, WHERE WALL SPACE DOES NOT PERMIT A 36 " MINIMUM GRAB BAR DUE TO THE LOCATION OF A RECESSED FIXTURE ADJACENT TO THE WATER CLOSET. FIXTURES RECESSED BEHIND ATER CLOSET SHALL NOT PROTRUDE FORWARD OF WALLS FACE OF FINISH BEHIND WATER CLOSET.
12. WHERE AN ADMINISTRATIVE AUTHORITY REQUIRES FLUSH CONTROLS FOR FLUSH VALVES TO BE LOCATED IN A POSITION THAT CONFLICTS WITH THE LOCATION OF THE REAR GRAB BAR, THE THE REAR BAR SHALL BE PERMITTED TO BE SPLIT OR SHIFTED TO THE OPEN SIDE OF THE TOILET AREA.
13. ACCESSORIES SHALL BE LOCATED ON AN ACCESSIBLE ROUTE AND WITHIN ACCESSIBLE REACH RANGE. PROVIDE CLEAR FLOOR SPACE THAT ALLOWS A FORWARD OR PARALLEL APPROACH BY A PERSON USING A WHEELCHAIR. ALL USER OPERABLE PARTS & CONTROLS SHALL BE LOCATED WITHIN 40" MAX FROM THE FINISH FLOOR.CONTROLS AND OPERATING MECHANISMS SHALL BE OPERABLE WITH ONE HAND AND SHALL NOT REQUIRE TIGHTGRASPING, PINCHING OR TWISTING OF THE WRIST. THE FORCE REQUIRED TO ACTIVATE CONTROLS SHALL BE NO GREATER THAN 5 POUNDS OF FORCE.
14. DOOR TO SINGLE USER TOILET OR BATHING SHALL BE PROVIDED WITH AN ACCESSIBLE PRIVACY LATCH.
15. THE CLEAR FLOOR AREA ON BOTH SIDES OF DOOR OF WHEELCHAIR ACCESSIBLE TOILET COMPARTMENT SHALL BE CLEAR OF ANY OBSTRUCTIONS & CLEAR OF THE ARC OF THE SWING OF ANY OTHER DOOR. DOORS SHALL HAVE 18" PULL SIDE STRIKE SIDE CLEARANCE.
15. VERIFY WALL STRUCTURE, BACKING & MOUNTING REQUIREMENTS IN FIELD - EACH GRAB BAR SHALL SUPPORT A FORCE OF 250 LBS MIN APPLIED IN ANY DIRECTION TO ANY POINT OF THE GRAB BAR.
16. WHERE PROVIDED, BABY CHANGE APPLIANCES WHEN DEPLOYED SHALL NOT ENCROACH ON DOORWAY MANUEVERING AREAS AND BE PLACED ON TOILET CLEAR FLOOR AREAS ABOVE OR BELOW GRAB BARS.
17. SEPERATE GRAB BARS ON ADJACENT WALLS ARE TO BE INSTALLED AT A COMMON HEIGHT.

BUREAU OF ARCHITECTURE

SAN FRANCISCO PUBLIC WORKS

Ron Alameida - City Architect

Julia Laue - Principal Architect / Bureau Manager

30 Van Ness Ave., Suite 4100, San Francisco, CA 94102
Fax (415)557-4701, Phone (415)557-4700

Golden Gate Park Golf Clubhouse

970 47th Avenue
San Francisco, CA 94121

Consultant

Design Development 11.16.2020

No.	Date	Revisions

PM Noah Levy

PA Paul DeFreitas

Drawn Author

Checked

NOT FOR CONSTRUCTION

Drawing Title

ACCESSIBLE TOILET ROOM STANDARD DETAILS

Sheet No. G3.32

Scale: 1/2" = 1'-0"

Project No. 1804

Original Sheet Size: 22"x34"

C:\Users\eharriso\Documents\1804_GGP_GC_CLUBHOUSE_R18_eharriso.rvt
11/2/2020 6:19:05 PM

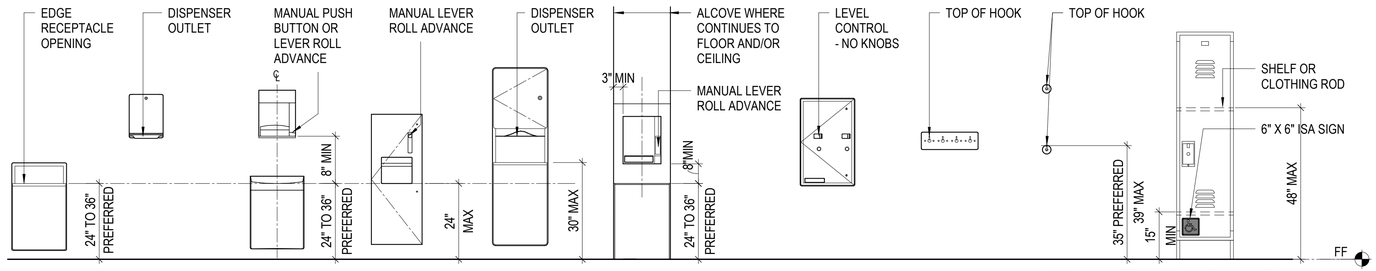

F. SEMI-RECESSED WASTE RECEPTACLE

A. SURFACE MOUNTED FOLDER PAPER TOWEL DISPENSER WHERE OCCURS

C. SURFACE MOUNTED MANUAL PAPER TOWEL DISPENSER WITH SURFACE-MOUNTED WASTE RECEPTACLE

D. RECESSED STAINLESS STEEL ROLL PAPER TOWEL DISPENSER & TRASH BIN WITH LEVER

E. SEMI-RECESSED FOLDED PAPER TOWEL DISPENSER & TRASH BIN

B. ALCOVE MOUNTEDMANUAL PAPER TOWEL DISPENSER

G. SEMI-RECESSED NAPKIN/TAMPON VENDOR DISPENSER WHERE OCCURS

H. VANDAL RESISTANT COAT HOOK STRIP (4" MAX PROJECTION FROM FINISH FACE OF WALL)

I. WALL-MOUNTED COAT HOOKS PROVIDE (TWO MIN) MOUNTED HIGH & LOW AS SHOWN

J. SINGLE LOCKER WITH WIRE PULL HANDLE AND LOW SHELF VERIFY LOCKER IN ARCH DRAWINGS

TOWEL DISPENSER NOTES

1. ALL HARD ROLL PAPER TOWEL DISPENSERS SHALL BE EITHER ELECTRONIC AUTOMATIC DISPENSER THAT CAN DISPENSE TOWELS WITHOUT TOUCHING ANY CONTROLS OR HAVE A MANUAL PAPER ADVANCE LEVER.
2. THE CONTROLS SHALL BE OPERABLE WITH ONE HAND AND SHALL NOT REQUIRE TIGHT GRASPING, PINCHING, OR TWISTING OF THE WRIST. THE FORCE REQUIRED TO ACTIVATE THE CONTROLS SHALL BE NO GREATER THAN 5 LB OF FORCE.
3. AT LEAST ONE PAPER TOWEL DISPENSER IN EACH WASHROOM WHERE SCHEDULED SHALL BE MOUNTED PER THIS DETAIL SUCH THAT A LL USER OPERABLE CONTROLS OR PARTS ARE WITHIN 46" OF THE FINISH FLOOR. ANY ADDITIONAL TOWEL DISPENSERS MAY BE MOUNTED SUCH THAT THE BOTTOM OF THE DISPENSER IS 52" AFF.
4. ALL ACCESSORIES LOCATED IN MULTI-USER TOILER BATHING, LOCKER OR CHANGING ROOMS MORE THAN 27" AFF MUST NOT PROTRUDE MORE THAN 4" FROM WALL.

10 WALL ACCESSORY DETAILS

1/2" = 1'-0"

DAC APPROVED R06 2019.08.01

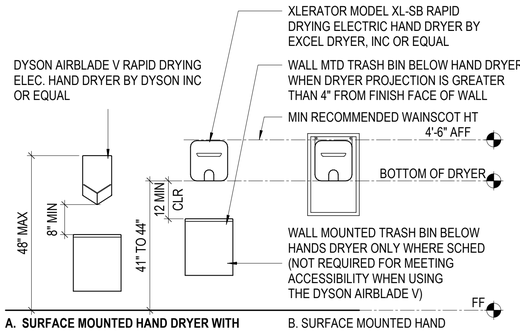

A. SURFACE MOUNTED HAND DRYER WITH FULLY AUTOMATIC SENSOR

B. SURFACE MOUNTED HAND DRYER WITH FULLY AUTOMATIC SENSOR MOUNTED IN WALL RECESS (4" MAX. PROJECTION FROM FINISH FACE OF WALL)

11 AUTOMATIC HAND DRYER

1/2" = 1'-0"

DAC APPROVED R06 2019.08.01

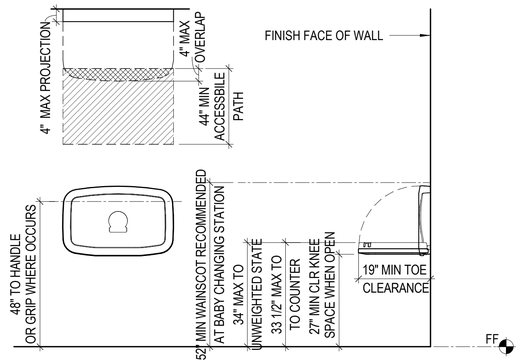

A. FRONT ELEVATION

B. SIDE ELEVATION

NOTE: BABY CHANGING UNITS SHALL NOT BE INSTALLED IN WHEELCHAIR ACCESSIBLE TOILET COMPARTMENTS. BABY CHANGING UNITS SHALL NOT BE INSTALLED WHERE IN OPEN OR CLOSED POSITION, IT WOULD OVERLAP THE CLEAR FLOOR AREA REQUIRED AT A DOOR OR THE ACCESSIBLE ROUTEIN A MULTI-USER TOILET OR BATHING ROOM.

5 BABY CHANGING STATION

1/2" = 1'-0"

DAC APPROVED R06 2019.08.01

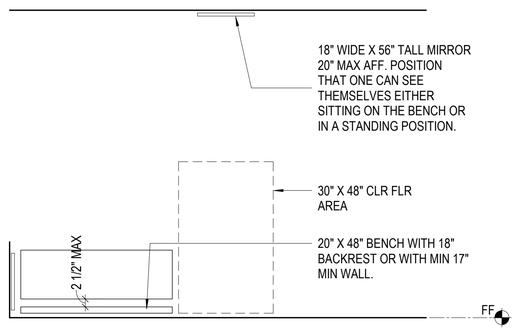

A. PLAN

NOTE: BENCHES SHALL BE AFFIXED TO THE WALL OR FLOOR. ALLOWABLE STRESSED SHALL NOT BE EXCEEED FROR MATERIALS USED WHEN A VERTICAL OR HORIZONTAL FORCESOF 250 LBS IS APPLIED AT ANY POINT ON THE SEAT, FASTENER, MOUNTIGN DEVICE, OR SUPPORTING STRUCTURE.

2 ACCESSIBLE BENCH

1/2" = 1'-0"

DAC APPROVED R06 2019.08.01

BUREAU OF ARCHITECTURE

SAN FRANCISCO PUBLIC WORKS

Ron Alameida - City Architect

Julia Laue - Principal Architect / Bureau Manager

30 Van Ness Ave., Suite 4100, San Francisco, CA 94102
Fax (415)557-4701, Phone (415)557-4700

Golden Gate Park Golf Clubhouse

970 47th Avenue
San Francisco, CA 94121

Consultant

Design Development 11.16.2020

No.	Date	Revisions

PM
PA Noah Levy
Drawn Paul DeFreitas
Checked LM

NOT FOR CONSTRUCTION

Drawing Title

ACCESSIBLE TOILET ROOM ACCESSORIES DETAILS

Sheet No. G3.33

Scale: 1/2" = 1'-0"

Project No. 1804

Original Sheet Size: 22"x34"

C:\Users\eharriso\Documents\1804_GGP_GC_CLUBHOUSE_R18_eharriso.rvt
11/2/2020 6:19:06 PM

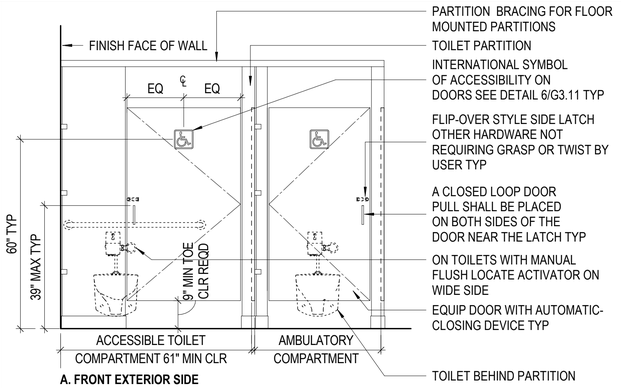

A. FRONT EXTERIOR SIDE

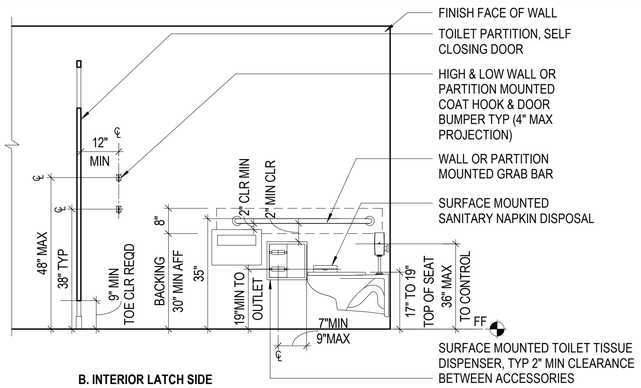

B. INTERIOR LATCH SIDE

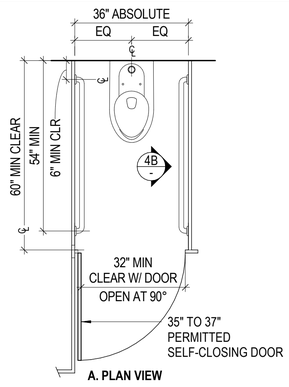

A. PLAN VIEW

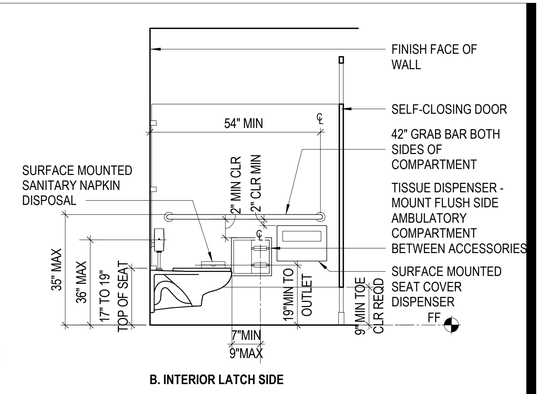

B. INTERIOR LATCH SIDE

1. ALL PARTITION MOUNTED GRAB BARS MUST BE ABLE TO SUPPORT A MIN OF 250 LBS. IN ANY DIRECTION BOTH AT THE GRAB BAR AND AT THE PARTITION WITH DOCUMENTED CERTIFICATION BY TOILET PARTITION MFR.
2. RECESSED OR SEMI-RECESSED TOILET TISSUE, SEAT COVER DISPENSER OR OTHER DISPOSAL UNITS ARE NOT PERMITTED BETWEEN THE WALL OR PARTITION AND GRAB BAR.
3. SEE DET 10/G3.33 FOR ACCESSORIES.
4. AT LEAST ONE SIDE PARTITION MUST PROVIDE A TOE CLEARANCE AT 9" MIN AFF AND 6" DEEP MIN BEYOND THE THE COMPARTMENT SIDE FACE OF THE PARTITION.

10 TOILET COMPARTMENT AND ADJACENT AMBULATORY TOILET COMPARTMENTS

1/2" = 1'-0"

DAC APPROVED R06 2019.08.01

1. ALL PARTITION MOUNTED GRAB BARS MUST BE ABLE TO SUPPORT A MIN OF 250 LBS. IN ANY DIRECTION BOTH AT THE GRAB BAR AND AT THE PARTITION WITH DOCUMENTED CERTIFICATION BY TOILET PARTITION MANUFACTURER.
2. RECESSED OR SEMI RECESSED COMBINATION TOILET TISSUE, SEAT COVER DISPENSER OR OTHER DISPOSAL UNITS ARE NOT PERMITTED BETWEEN THE WALL, PARTITION, AND GRAB BAR.
3. SEE DET 10/G3.33 FOR ACCESSORIES

4 AMBULATORY COMPARTMENT

1/2" = 1'-0"

DAC APPROVED R06 2019.08.01

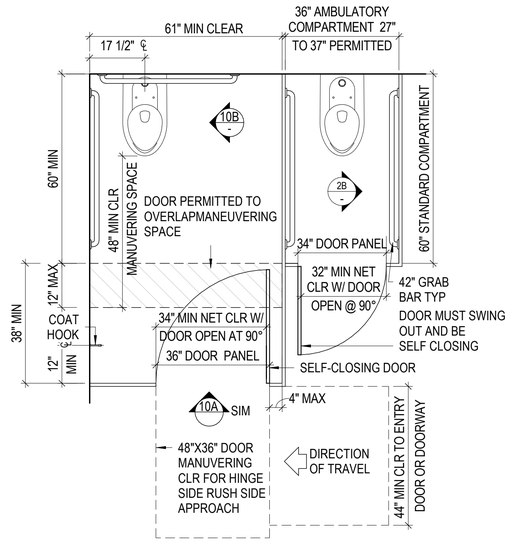

TOILET COMPARTMENT W/ FRONT-OPEN INSWING DOOR & ADJACENT AMBULATORY COMPARTMENT

8 1/2" = 1'-0"

DAC APPROVED R06 2019.08.01

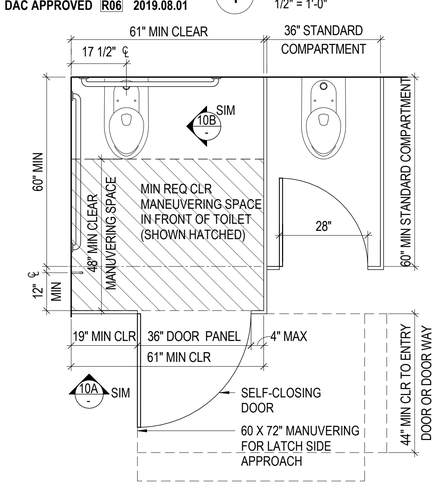

TOILET COMPARTMENT W/ FRONT-OPEN OUTSWING DOOR

5 1/2" = 1'-0"

DAC APPROVED R06 2019.08.01

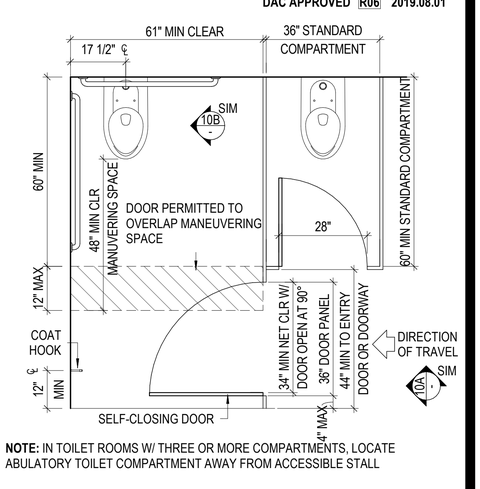

NOTE: IN TOILET ROOMS W/ THREE OR MORE COMPARTMENTS, LOCATE ABULATORY TOILET COMPARTMENT AWAY FROM ACCESSIBLE STALL

TOILET COMPARTMENT W/ IN-SWING -SIDE ENTRY DOOR

2 1/2" = 1'-0"

DAC APPROVED R06 2019.08.01

BUREAU OF ARCHITECTURE

SAN FRANCISCO PUBLIC WORKS

Ron Alameida - City Architect

Julia Laue - Principal Architect / Bureau Manager

30 Van Ness Ave., Suite 4100, San Francisco, CA 94102
Fax (415)557-4701, Phone (415)557-4700

Golden Gate Park Golf Clubhouse

970 47th Avenue
San Francisco, CA 94121

Consultant

Design Development 11.16.2020

No.	Date	Revisions

PM Noah Levy
PA Paul DeFreitas
Drawn Author
Checked Checker

NOT FOR CONSTRUCTION

Drawing Title

ACCESSIBLE TOILET RESTROOM STANDARD DETAILS

Sheet No. G3.34

Scale: 1/2" = 1'-0"

Project No. 1804

Original Sheet Size: 22"x34"

C:\Users\eharriso\Documents\1804_GGP_GC_CLUBHOUSE_R18_eharriso.rvt
11/22/2020 6:19:07 PM

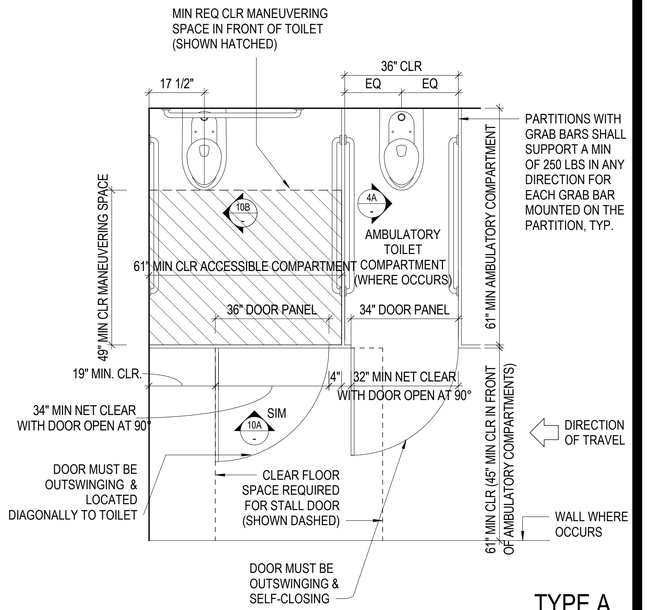

TYPE A

TOILET COMPARTMENT ADJACENT TO AMBULATORY COMPARTMENT - DOOR SWING OUT

2 1/2" = 1'-0" DAC APPROVED R06 2019.08.01

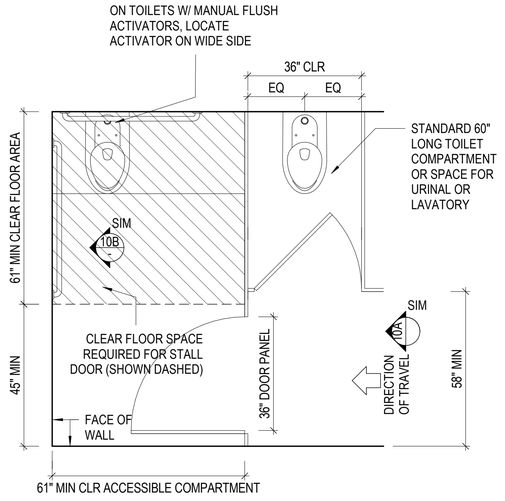

TOILET_COMPARTMENT_W/ IN-SWINGING SIDE DOOR

6 1/2" = 1'-0" DAC APPROVED R06 2019.08.01

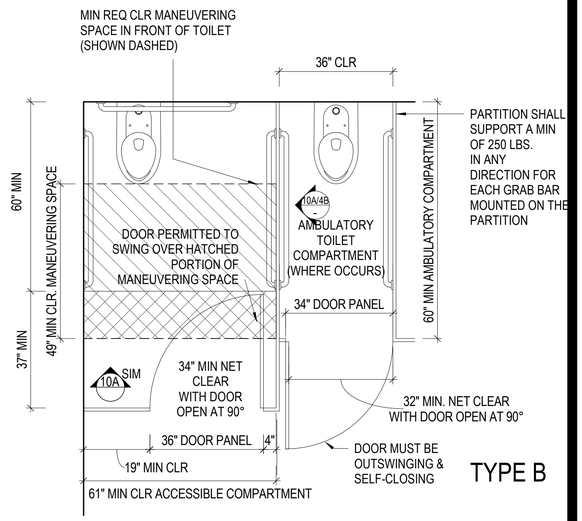

TYPE B

TOILET COMPARTMENT ADJACENT TO AMBULATORY COMPARTMENT - IN-SWING DOOR

3 1/2" = 1'-0" DAC APPROVED R06 2019.08.01

Original Sheet Size: 22"x34"

C:\Users\eharriso\Documents\1804_GGP_GC_CLUBHOUSE_R18_eharriso.rvt
11/2/2020 6:19:08 PM

BUREAU OF ARCHITECTURE

SAN FRANCISCO PUBLIC WORKS

Ron Alameida - City Architect

Julia Laue - Principal Architect / Bureau Manager

30 Van Ness Ave., Suite 4100, San Francisco, CA 94102
Fax (415)557-4701, Phone (415)557-4700

Golden Gate Park Golf Clubhouse

970 47th Avenue
San Francisco, CA 94121

Consultant

Design Development 11.16.2020

No.	Date	Revisions

PM Noah Levy
PA Paul DeFreitas
Drawn Author
Checked Checker

NOT FOR CONSTRUCTION

Drawing Title

ACCESSIBLE TOILET ROOM ALTERNATE DETAILS

Sheet No. G3.35

Scale: 1/2" = 1'-0"

Project No. 1804

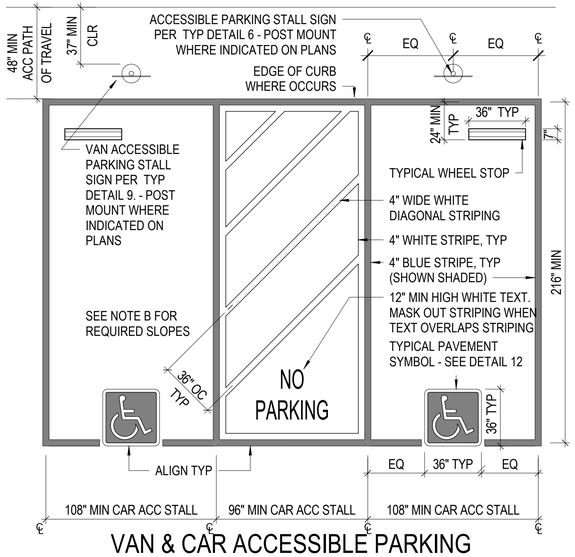

VAN & CAR ACCESSIBLE PARKING STALL

7 — 1/4" = 1'-0"

DAC APPROVED R06 2019.08.01

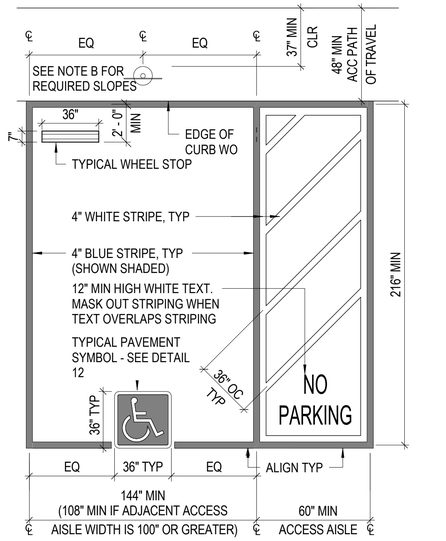

VAN ACCESSIBLE PARKING STALL

4 — 1/4" = 1'-0"

DAC APPROVED R06 2019.08.01

30° ANGLED VAN & CAR ACCESSIBLE PARKING STALL

8 — 1/4" = 1'-0"

DAC APPROVED R06 2019.08.01

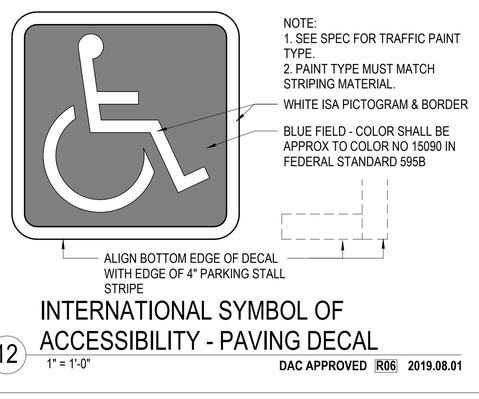

NOTE:
CONTRACTOR TO CONFIRM TOWING AGENCY, ADDRESS, AND PHONE NUMBERS WITH SFMTA AND SFPD. POST SIGN IN CONSPICUOUS PLACE AT EACH ENTRANCE TO OFF STREET PARKING FACILITIES, OR IMMEDIATELY ADJACENT TO AND VISIBLE FROM EACH STALL OR SPACE. BLANK SPACES ARE TO BE FILLED WITH APPROPRIATE INFORMATION AS A PERMANENT PART OF THE SIGN.

UNAUTHORIZED VEHICLE TOWING SIGN

11 — 1 1/2" = 1'-0"

DAC APPROVED R06 2019.08.01

INTERNATIONAL SYMBOL OF ACCESSIBILITY - PAVING DECAL

12 — 1" = 1'-0"

DAC APPROVED R06 2019.08.01

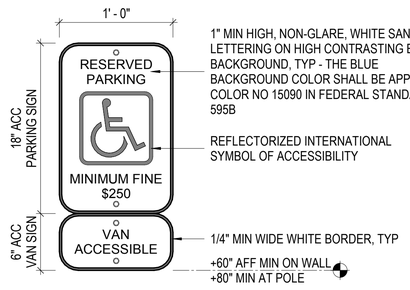

VAN ACCESSIBLE PARKING STALL SIGN

9 — 1 1/2" = 1'-0"

DAC APPROVED R06 2019.08.01

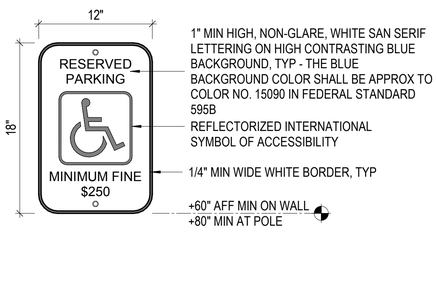

ACCESSIBLE PARKING STALL SIGN

6 — 1 1/2" = 1'-0"

DAC APPROVED R06 2019.08.01

PARKING SPACE DESIGN NOTES

GENERAL PARKING, ELECTRICAL VEHICLE PARKING AND VALET PARKING SHALL BE CALCULATED SEPARATELY. SPECIALIZED PARKING FOR EMPLOYEES VERSUS PUBLIC VS. MEDICAL ETC. SHALL BE CALCULATED SEPARATELY.

A. ACCESSIBLE ROUTES

I. AN ACCESSIBLE ROUTE SHALL CONNECT ACCESS AISLES OF ACCESSIBLE PARKING SPACES TO BUILDINGS AND FACILITY ENTRANCES AND WALKS AND SIDEWALKS THAT SERVE OTHER ACCESSIBLE ELEMENTS ON A SITE. **CBC 11B-208.3** PROVIDES OTHER PLANNING CRITERIA.

B. FLOOR SURFACES AT ACCESSIBLE SPACES, ADJACENT ACCESS AISLES AND ACCESSIBLE ROUTES SHALL

I. BE FIRM, STABLE, AND SLIP RESISTANT.

II. CROSS SLOPE IN ANY DIRECTION SHALL NOT EXCEED 1.5% MAX.

III. OPENINGS IN FLOOR OR GROUND SURFACES OF THESE AREAS SHALL NOT PERMIT THE PASSAGE OF A 1/2" DIAMETER SPHERE.

IV. CHANGES IN ELEVATION SHALL NOT EXCEED 1/4" MAX.

V. DETECTABLE WARNINGS, DRAINS, OR GRATES ARE NOT PERMITTED TO BE PLACED IN OR ON PARKING SPACE OR ADJACENT ACCESS AISLE SURFACES.

C. VERTICAL CLEARANCES

I. THE VERTICAL CLEARANCE ALONG VEHICULAR ROUTE TO AND FROM ACCESSIBLE SPACES ARE REQUIRED TO BE MINIMUM 114" CLEAR. THE ACCESSIBLE ROUTE LEADING TO AND FROM ACCESS AISLES TO BUILDING AND FACILITY ENTRANCE, OR DESIGNATED ROUTE TO EXITS, SHALL BE 120" CLEAR MAX.

D. PAVING

I. ACCESSIBLE PARKING SPACES, PASSENGER LOADING ZONES, ELECTRIC VEHICLE SPACES REQUIRED BY CBC 11B-228.3, AND ADJACENT ACCESS AISLES SHALL BE CONCRETE PAVING UON. CONSTRUCTION DETAILS INCLUDING REINFORCING ARE SHOWN ELSEWHERE ON DRAWINGS.

E. PARKING SPACE SIGNS AND MOVEMENT MARKINGS

I. ACCESSIBLE PARKING SPACES SHALL BE IDENTIFIED BY A SIGN BEARING THE STANDARD ISA SYMBOL IN WHITE ON A BLUE BACKGROUND, THE TEXT "RESERVED PARKING" OR "PARKING ONLY", AND THE TEXT, "$250 MINIMUM FINE".

II. VAN ACCESSIBLE SIGNS SHALL BE IDENTIFIED BY A SIGN WITH THE TEXT "VAN ACCESSIBLE" WHICH MAY BE SEPARATED OR INTEGRATED WITH THE FIRST SIGN.

III. SIGNS SHALL BE MOUNTED ON A WALL SURFACE, POLE OR HUNG FROM OVERHEAD STRUCTURE. MIN MOUNTING HEIGHTS ARE NOTED IN DETAILS.

IV. PARKING SPACE, PASSENGER LOADING AND UNLOADING SPACE AND ACCESS AISLE PAVEMENT MARKINGS SHALL BE THERMOPLASTIC MATERIALS. STANDARD SIZES AND GRAPHICS ARE SHOWN IN DETAILS. TECHNICAL CRITERIA FOR MATERIALS ARE LOCATED IN SPECIFICATIONS.

V. THE "UNAUTHORIZED VEHICLES" TOWING SIGN SHALL BE POSTED AS SHOWN IN PLANS.

BUREAU OF ARCHITECTURE

SAN FRANCISCO PUBLIC WORKS

Ron Alameida - City Architect

Julia Laue - Principal Architect / Bureau Manager

30 Van Ness Ave., Suite 4100, San Francisco, CA 94102
Fax (415)557-4701, Phone (415)557-4700

Golden Gate Park Golf Clubhouse

970 47th Avenue
San Francisco, CA 94121

Consultant

Design Development 11.16.2020

No.	Date	Revisions

PM Noah Levy
PA Paul DeFreitas
Drawn Author
Checked Checker

NOT FOR CONSTRUCTION

Drawing Title

PARKING

Sheet No. G3.51

Scale: As indicated

Project No. 1804

C:\Users\eharriso\Documents\1804_GGP_GC_CLUBHOUSE_R18_eharriso.rvt
11/22/2020 6:19:11 PM

Original Sheet Size: 22"x34"

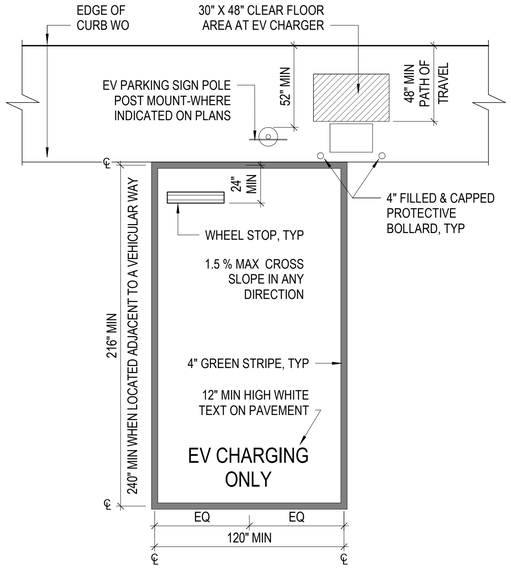

NOTE: TYPE C IS THE THIRD TYPE OF EV PARKING SPACE WHERE 26 TO 50 EV SPACES ARE PROVIDED. TYPE C HAS NO AISLE.

10 TYPE C - AMBULATORY EV CHARGING STATION

1/4" = 1'-0"

DAC APPROVED R06 2019.08.01

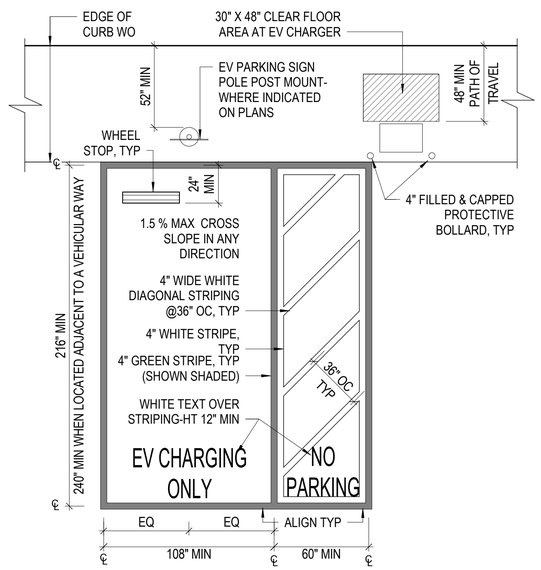

NOTE: TYPE B IS THE SECOND TYPE OF EV PARKING SPACE WHERE 5 TO 25 EV SPACES ARE PROVIDED. TYPE B IS PERMITTED TO SHARE TYPE A 'S AISLE.

7 TYPE B - EV CHARGING STATION

1/4" = 1'-0"

DAC APPROVED R06 2019.08.01

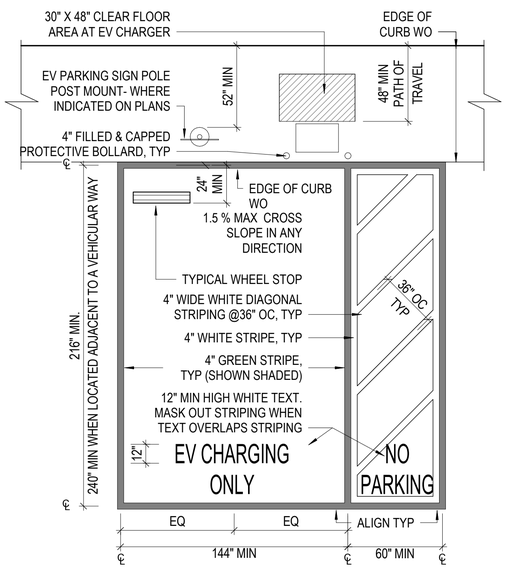

NOTE: TYPE A IS THE FIRST TYPE OF EV PARKING SPACE WHERE 1 TO 4 SPACES ARE PROVIDED.

4 TYPE A - VAN EV CHARGING STATION

1/4" = 1'-0"

DAC APPROVED R06 2019.08.01

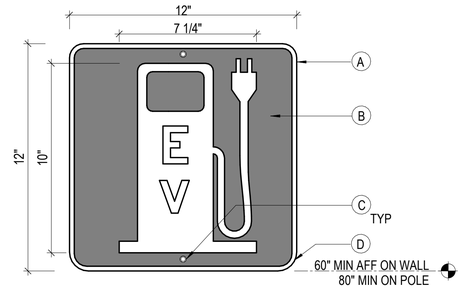

SIGN NOTES FOR VAN EVCS SIGNS:

A. .080" THICK ALUM SIGN
B. GRAPHICS PRINTED ON REFLECTED VINYL, BACKGROUND COLOR RAL 6001 - EMERALD GREEN, SURFACED APPLIED TO ALUM PLATE
C. 3/8" DIA MOUNTING HOLES
D. 1- 1/2" RADIUS CORNERS

1 ELECTRIC VEHICLE WALL OR POLE SIGN

3" = 1'-0"

DAC APPROVED R06 2019.08.01

ELECTRIC VEHICLE CHARGING STATION (EVCS) ENLARGED PARKING SPACE DESIGN NOTES

THESE PLANS DETAILS APPLY TO EVCS THAT ARE ENLARGED SPACES AND WHICH ALSO HAVE A POTENTIAL TO BE CONVERTED TO EV PARKING SPACES, SUCH AS "EV-READY" SPACES. EV PARKING SPACE SHALL COMPLY WITH STANDARD ACCESSIBLE PARKING REQUIREMENTS AND INCLUDE EV SIGN DETAIL FIVE.

A. CALCULATION OF ENLARGED EVCS PARKING SPACES

I. ENLARGED EVCS SPACES FOR THE PUBLIC AND GENERAL PARKING AND / OR "EV READY" SHALL BE CALCULATED PER **CBC SECTION 228.2.**
II. WHEN NEW EVCS ARE PROVIDED FOR PUBLIC OR COMMON USE, THE TOTAL NUMBER OF EXISTING AND NEW SPACES SHALL BE USED IN THIS CALCULATION.
III. WHERE AN EV CHARGER CAN SIMULTANEOUSLY CHARGE MORE THAN ONE VEHICLE, THE NUMBER OF EV CHARGERS PROVIDED SHALL BE CONSIDERED EQUIVALENT TO THE NUMBER OF ELECTRIC VEHICLES THAT CAN BE SIMULTANEOUSLY CHARGED.
IV. EVCS NOT AVAILABLE TO THE GENERAL PUBLIC AND INTENDED FOR USE BY A DESIGNATED VEHICLE OR DRIVER SHALL NOT BE REQUIRED TO COMPLY WITH THESE REQUIREMENTS OR CALCULATION. EXAMPLES INCLUDE, BUT ARE NOT LIMITED TO: EVCS SERVING PUBLIC OR PRIVATE FLEET VEHICLES OR PRIVATE FLEET VEHICLES AND EVCS ASSIGNED TO AN EMPLOYEE.
V. EVCS ENLARGED SPACES PROVIDED FOR NEW OR EXISTING PARKING FACILITY MAY SERVE AS ENLARGED SPACES IN "EV-READY" PARKING LOTS THAT BECOME FULLY OR PARTIALLY CONVERTED TO EVCS.

B. ACCESSIBLE ROUTES

I. AN ACCESSIBLE ROUTE SHALL CONNECT ACCESS AISLES OF TYPES A AND B ACCESS AISLES TO BUILDINGS AND FACILITY ENTRANCES AND WALKS AND SIDEWALKS THAT SERVE OTHER ACCESSIBLE ELEMENTS ON A SITE. AN ACCESSIBLE ROUTE SHALL CONNECT THE ENLARGED EVCS PARKING SPACE, AND THE EVCS CHARGER WHICH IT SERVES. CORDS FROM AN EVCS CHARGER SHALL NOT CROSS THIS ACCESSIBLE ROUTE.

C. FLOOR SURFACES

FLOOR SURFACES AT ENLARGED PARKING SPACES, THE ADJACENT ACCESS AISLES AND ACCESSIBLE ROUTES SHALL:

I. BE FIRM, STABLE, AND SLOPE RESISTANCE.

II. CROSS SLOPE IN ANY DIRECTION SHALL NOT EXCEED 1.5% MAX.

III. OPENINGS IN FLOOR OR GROUND SURFACES OF THESE AREAS SHALL NOT PERMIT THE PASSAGE OF A 1/2" DIAMETER SPHERE.

IV. CHANGES IN ELEVATION SHALL NOT EXCEED 1/4" MAX.

V. DETECTABLE WARNINGS, DRAINS OR GRATES ARE NOT PERMITTED TO BE PLACED IN OR ON EVCS ENLARGE PARKING SPACE OR ADJACENT ACCESS AISLE SURFACES. WHEN USED ON ACCESSIBLE ROUTES CROSSING HAZARDOUS VEHICULAR AREAS OR ON CURB RAMPS, DETECTABLE WARNING TILES SHALL CONFORM TO PUBLIC WORKS STANDARD 102,859, SHEET RX-6. WHERE SHOWN IN DRAWINGS, DETECTABLE WARNINGS SHALL BE EMBEDDED COMPOSITE CONCRETE PANELS. SURFACE MOUNTED PANELS ARE NOT PERMITTED UON.

D. VERTICAL CLEARANCE

I. VEHICULAR ROUTE TO AND FROM TYPE A AND B ENLARGED SPACES ARE REQUIRED TO BE 98" CLEAR. THE ACCESSIBLE ROUTE LEADING TO AND FROM ACCESS AISLES TO BUILDING AND FACILITY ENTRANCES, OR DESIGNATED ROUTE TO EXITS, SHALL BE 80" MAX CLEAR.

E. PAVING MATERIAL

I. TYPE A AND B EVCS ENLARGED PARKING SPACES AND THEIR ADJACENT ACCESS AISLES SHALL BE CONCRETE PAVING. CONSTRUCTION DETAILS INCLUDING REINFORCING ARE SHOWN ELSEWHERE ON DRAWINGS.

F. SIGNS AND PAVEMENT MARKINGS

I. EVCS PARKING SPACES SHALL BE IDENTIFIED BY THE SIGN IN DETAIL FIVE.

II. WHERE FOUR OR FEWER TOTAL EVCS ARE PROVIDED, IDENTIFICATION WITH THE INTERNATIONAL SYMBOL OF ACCESSIBILITY (ISA) AND SIGNS IDENTIFYING VAN ACCESSIBLE SPACES SHALL NOT BE REQD. WHEN REQD THE ISA GRAPHIC AND "VAN ACCESSIBLE" TEXT MAY APPEAR ON THE SAME EV SIGN PANEL OR SHALL BE MOUNTED ON A WALL SURFACE, POLE OR HUNG FROM OVERHEAD STRUCTURE. ISA SIGN IS NOT REQUIRED AT FLEET EV CHARGING SPACES BYT IS REQUIRED AT EV PARKING SPACES PER CBC 11B.

III. EVCS ENLARGED PARKING SPACE AND ADJACENT ACCESS AISLE PAVEMENT MARKINGS SHALL BE THERMOPLASTIC MATERIALS. STANDARD SIZES AND GRAPHICS ARE SHOWN IN DETAILS. TECHNICAL CRITERIA FOR MATERIALS ARE LOCATED IN SPECIFICATIONS.

G. ELECTRIC VEHICLE CHARGERS AT ENLARGED EVCS SPACES

I. ELECTRICAL VEHICLE CHARGERS SHALL BE ON ACCESSIBLE ROUTE THAT CONNECTS IT TO THE ENLARGED EVCS PARKING SPACE. IT SHALL NOT BE LOCATED WITHIN THE ENLARGED EVCS SPACE OR ACCESS AISLE AREA.

II. A 30" MIN AND 48" MAX CLEAR FLOOR OR GROUND SPACE SHALL BE LOCATED ADJACENT TO AND CENTERED ON THE OPERABLE CONTROLS SIDE OF THE CHARGING UNIT. OPERABLE PARTS AND CHARGING CORE STORAGE SHALL COMPLY WITH CBC SECTION 11B-309 OPERABLE PARTS. POINT-OF SALES DEVICES SHALL COMPLY WITH TECHNICAL AND PERFORMANCE CRITERIA OF CBC SECTION 11B-812.10.3.

III. A CHARGER MAY SERVE MULTIPLE EVCS SPACES. THE CORD(S) SHALL NOT OBSTRUCT ACCESS AISLE OF ACCESSIBLE ROUTES OR THEIR CLEAR HEIGHTS. CHARGERS UNITS SERVING MORE THAN ONE EVCS SHALL BE ADJACENT TO AND WITHIN THE COMBINED PROJECTED WIDTH OF THE VEHICLE SPACES BEING SERVED.

IV. WHERE THE LONG DIMENSION OF A VEHICLE SPACE IS PARALLEL TO THE VEHICULAR WAY, THE CHARGER SHALL BE ADJACENT TO AND 48" MAX FROM THE HEAD END OR FOOT END OF THE VEHICLE SPACE OR ITS ACCESS AISLE.

V. IN ALTERATIONS AT EXISTING FACILITIES WHERE AN ACCESSIBLE ROUTE OR GENERAL CIRCULATION PATH IS NOT PROVIDED ADJACENT TO THE HEAD AND OF THE VEHICLE SPACE OR ACCESS AISLE, THE CHARGER MAY BE LOCATED WITHIN THE PROJECTED WIDTH OF THE ACCESS AISLE 36" MAX FROM THE HEAD END OF THE SPACE.

BUREAU OF ARCHITECTURE

SAN FRANCISCO PUBLIC WORKS

Ron Alameida - City Architect
Julia Laue - Principal Architect / Bureau Manager
30 Van Ness Ave., Suite 4100, San Francisco, CA 94102
Fax (415)557-4701, Phone (415)557-4700

Golden Gate Park Golf Clubhouse

970 47th Avenue
San Francisco, CA 94121

Consultant

Design Development 11.16.2020

No.	Date	Revisions

PM Noah Levy
PA Paul DeFreitas
Drawn Author
Checked Checker

NOT FOR CONSTRUCTION

Drawing Title

ELECTRIC VEHICLE CHARGING STATIONS - ENLARGED PARKING SPACES

Sheet No.

G3.52

Scale: As indicated

Project No.

1804

C:\Users\ehamiso\Documents\1804_GGP_GC_CLUBHOUSE_R18_ehamiso.rvt
11/2/2020 6:19:12 PM

Original Sheet Size: 22"x34"

GS6: San Francisco Green Building Submittal Form for Municipal Projects

Form version: October 10, 2017 (For permit applications January 2017 - December 2019)

INSTRUCTIONS:

1. **Select one (1) column to the right.**
2. **For each requirement in the column, indicate evidence of fulfillment in the References column.**
3. **Fill out the project information in the Verification box at the right.**
4. **Attach LEED Scorecard on separate, subsequent sheet.**
5. **Submittal must be a minimum of 24" x 36".**

CHECK THE ONE COLUMN THAT BEST DESCRIBES YOUR PROJECT

**This form includes the requirements of San Francisco Green Building Code and Environment Code Chapter 7. Major Renovations as defined by Environment Code Chapter 7 also include Major Alterations as defined by SFGBC, where applicable.*

	TITLE	SOURCE OF REQUIREMENT	LEED v4 CREDIT	DESCRIPTION OF REQUIREMENT	MUNICIPAL: ☐ NEW CONSTRUCTION & MAJOR RENOVATION* (10,000 sq.ft. or greater)	MUNICIPAL: ☐ COMMERCIAL INTERIORS (10,000 sq.ft. or greater)	MUNICIPAL: ☐ SMALL PROJECTS (less than 10,000 sq.ft. or any not meeting LEED MPR's)	REFERENCES (DRAWING OR SPECIFICATION # (If not applicable, indicate "N/A".))
LEED	Required LEED Certification Level	Environment Code sec.705		Project is required to achieve sustainability certification listed at right.	GOLD (60+) CERTIFIED	GOLD (60+) CERTIFIED, LEED CI	*n/r*	
LEED	LEED Point Adjustment for Retention/Demolition of Historic Features/Building	SFGBC 5.104		Enter any applicable point adjustments in box at right.	_____	_____	*n/r*	
LEED	LEED Points shown on Current Scorecard			Enter current expected LEED score in box at right.	_____	_____	*n/r*	
LEED	LEED Scorecard Submittals			Submit LEED Scorecard to Municipal Green Building Task Force at 100% Concept Design and As-Built (LEED Online is acceptable means of submittal).	•	•	•	
MATERIALS	LOW-EMITTING MATERIALS	Environment Code sec.706 OR CALGreen 5.504.4.1-6	EQc2	For projects ≥10,000 sq.ft., use products that comply with LEED emissions & content requirements for paints, coatings, adhesives, sealants, flooring, composite wood, ceiling/wall/thermal/acoustic insulation, furniture if part of scope, and exterior applied products if healthcare or school project. For projects <10,000 sq.ft., use products that comply with the emission limit requirements of 5.504.4.1-6 for adhesives, sealants, paints, coatings, carpet systems including cushions and adhesives, resilient flooring (80% of area), and composite wood products.	LEED EQc2 (3 pts)	LEED EQc2 (3 pts)	5. 504.4.1-6	
MATERIALS	PVC ELIMINATION	Environment Code sec.509		Specify no materials containing PVC.	•	•	•	
MATERIALS	LEAD ELIMINATION	Environment Code sec.711		Specify no materials containing lead.	•	•	•	
MATERIALS	TROPICAL HARDWOOD & VIRGIN REDWOOD BAN	Environment Code ch.8		Specify no tropical hardwoods or virgin redwoods.	•	•	•	
WATER	INDOOR WATER USE REDUCTION	Environment Code sec.706, CALGreen 5.303.3	WEp2, WEc2	Meet flush/flow requirements for: toilets (1.28gpf); urinals (0.125gpf wall, 0.5gpf floor); showerheads (2.0gpm); lavatories (1.2gpm private, 0.5gpm public/common); kitchen faucets (1.8gpm); wash fountains (1.8gpm); metering faucets (0.2gpc); food waste disposers (1gpm/8gpm). Additionally, for projects ≥10,000 sq.ft., use minimum 30% less potable water as calculated using a baseline with toilets (1.6gpf); urinals (1.0gpf); showerheads (2.5gpm); lavatories (2.2gpm private, 0.5gpm public); kitchen faucets (2.2gpm).	LEED WEp2, LEED WEc2 (2 pts)	LEED WEp2 LEED WEc2 (4 pts)	5.303.3	
WATER	NON-POTABLE WATER REUSE	Health Code art.12C	WEc2	New buildings ≥40,000 sq.ft. must calculate a water budget. New buildings ≥250,000 sq.ft. must treat and use available rainwater, graywater, and foundation drainage for toilet and urinal flushing and irrigation.	•	*n/r*	*n/r*	
WATER	WATER-EFFICIENT IRRIGATION	Administrative Code ch.63	WEp1, WEc1	New construction projects with aggregated landscape area ≥500 sq.ft., or existing projects with modified landscape area ≥1,000 sq.ft., shall use low water use plants or climate appropriate plants, restrict turf areas and comply with Model Water Efficient Landscape Ordinance restrictions by calculated ETAF ≤.45 or by prescriptive compliance for projects with ≤2,500 sq.ft. of landscape area.	•	•	•	
WATER	WATER METERING	CALGreen 5.303.1	WEc4	For area of project, provide submeters for spaces projected to consume >1,000gal/day (or >100gal/day in buildings >50,000 sq.ft.).	•	•	•	
ENERGY	ENERGY EFFICIENCY	Environment Code sec.706, CA Energy Code	EAp2, EAc2	Comply with all provisions of the CA Energy Code. For projects ≥10,000 sq.ft., produce a whole-building energy simulation, or follow ASHRAE 50% Advanced Design Guide, or follow Advanced Building Core Performance Guide. Achieve energy use below established baseline by 5% for New Construction, 3% for Major Renovations, 2% for Core & Shell, 3% for Commercial Interiors. Commercial Interiors alternate compliance – reduce lighting power density by 5% below ASHRAE 90.1-2010 and install ENERGY STAR equipment for 50% of all eligible ENERGY STAR equipment.	LEED EAp2	LEED EAp2	•	
ENERGY	ZERO NET ENERGY TARGET	Environment Code sec.706	EAc2	Set target for annual energy consumption. Reporting required to Municipal Green Building Task Force. See Enviornment Regulations for guidance, tools and methods.	•	*n/r*	*n/r*	
ENERGY	ZERO NET ENERGY FEASIBILITY	Environment Code sec.706	EAc2	Determine feasibility to achieve Zero Net Energy (≤3 stories). Reporting required to Municipal Green Building Task Force. See Enviornment Regulations for guidance, tools and methods.	•	*n/r*	*n/r*	
ENERGY	PV + ENERGY STORAGE BENEFIT/COST ANALYSIS	Environment Code sec.706	EAc2, EAc5	Analyze Benefit/Cost Analysis for solar plus battery storage for defined building types. Reporting required to Municipal Green Building Task Force. See Enviornment Regulations for guidance, tools and methods.	•	*n/r*	*n/r*	
ENERGY	BETTER ROOFS	Planning Code sec.149, SFGBC div.5.2	EAc2 or various	New buildings with ≤10 floors must designate 15% of roof Solar Ready, per Title 24 rules. Install photovoltaics or solar hot water systems in this area. With Planning Department approval, projects subject to SFPUC Stormwater Requirements may substitute living roof for solar energy systems.	•	*n/r*	if new construction ≥2,000 sq.ft.	
ENERGY	RENEWABLE ENERGY	SFGBC 5.201.1.3	EAc2, EAc5	New buildings ≥11 floors must acquire renewable onsite energy or achieve 5 points under LEED credit Optimize Energy Performance (EAc2).	•	*n/r*	*n/r*	
ENERGY	COMMISSIONING (Cx)	Environment Code sec.706 OR CALGreen 5.410.2-5.410.4.5.1	EAp1, EAc1	For projects ≥10,000 sq.ft., comply with LEED Cx requirements – OPR, BOD, systems testing, operations manual, and Enhanced and Monitoring-Based Commissioning. For projects <10,000 sq.ft. and all new equipment in alterations & additions, comply with 5.410.2-5.410.4.5.1 – test and adjust all equipment.	LEED EAp1, LEED EAc1 (3+ pts)	LEED EAp1, LEED EAc1 (4+ pts)	5.410.2-5.410.4.5.1	
PARKING	BICYCLE PARKING	Planning Code sec.155.1-3, CAL Green 5.106.4	LTc6	Provide short- and long-term bike parking equal to 5% of motorized vehicle parking, or meet SF Planning Code sec.155.1-3, whichever is greater.	•	•	5.106.4	
PARKING	DESIGNATED PARKING	CALGreen 5.106.5.2	LTc7	If >10 total stalls added, comply with Table 5.106.5.2 (approx. 8% of total spaces).	•	•	•	
PARKING	WIRING FOR EV CHARGING	CALGreen 5.106.5.3	LTc8	Install electrical systems to provide electricity for EV chargers at 6% of spaces or per 5.106.5.3 (installation of chargers is not required.)	if new construction	*n/r*	if new construction	
WASTE DIVERSION	RECYCLING BY OCCUPANTS	Environment Code sec.707	MRp1	Provide adequate space and equal access for storage, collection and loading of compostable, recyclable and landfill materials.	•	•	•	
WASTE DIVERSION	CONSTRUCTION & DEMOLITION (C&D) WASTE MANAGEMENT	Environment Code sec.706, sec.708 & ch.14	MRp2, MRc5	Divert a minimum of 75% of total C&D debris including at least 4 material streams. For 100% of mixed C&D debris use registered transporters and registered processing facilities.	LEED MRp2, LEED MRc5	LEED MRp2, LEED MRc5	75% diversion	
HVAC	REFRIGERANT MANAGEMENT	CALGreen 5.508.1	EAp4	Use no halons or CFCs in HVAC.	•	•	•	
GOOD NEIGHBOR	LIGHT POLLUTION REDUCTION	CA Energy Code, CALGreen 5.106.8	SSc6	Comply with CA Energy Code for Lighting Zones 1-4. Comply with 5.106.8 for Backlight/Uplight/Glare.	if new construction	*n/r*	if new construction	
GOOD NEIGHBOR	BIRD-SAFE BUILDINGS	Planning Code sec.139	pilot credit	Glass facades and bird hazards facing and/or near Urban Bird Refuges may need to treat their glass for opacity.	•	•	•	
GOOD NEIGHBOR	TOBACCO SMOKE CONTROL	Health Code art.19F & art.19I, CALGreen 5.504.7	EQp2	Prohibit smoking within 25 feet of building entries, air intakes, and operable windows.	•	•	•	
POLLUTION PREVENTION	STORMWATER CONTROL PLAN	Public Works Code art.4.2 sec.147	SSc4	Projects disturbing ≥5,000 sq.ft. in combined or separate sewer areas, or replacing ≥2,500 impervious sq.ft. in separate sewer area, must implement a Stormwater Control Plan meeting SFPUC Stormwater Management Requirements.	if applicable	if applicable	if applicable	
POLLUTION PREVENTION	CONSTRUCTION SITE RUNOFF	Public Works Code art.4.2 sec.146	SSp1	Submit a construction site Erosion and Sedimentation Control Plan to SFPUC for approval.	if project disturbs ≥5,000 sq.ft.	if project disturbs ≥5,000 sq.ft.	if project disturbs ≥5,000 sq.ft.	
INDOOR ENVIRONMENTAL QUALITY	ACOUSTICAL CONTROL	CALGreen 5.507.4.1-3	EQc9	Comply with sound transmission limits (STC-50 exteriors near freeways/airports; STC-45 exteriors if 65db Leq at any time; STC-40 interior walls/floor-ceilings between tenants).	•	limited to envelope alterations & additions	•	
INDOOR ENVIRONMENTAL QUALITY	AIR FILTRATION (CONSTRUCTION)	CALGreen 5.504.1-3	EQc3	Seal permanent HVAC ducts/equipment stored onsite before installation.	•	•	•	
INDOOR ENVIRONMENTAL QUALITY	AIR FILTRATION (OPERATIONS)	CALGreen 5.504.5.3		Provide MERV-8 filters on HVAC for regularly occupied, actively ventilated spaces.	•	•	•	
INDOOR ENVIRONMENTAL QUALITY	ENHANCED IAQ STRATEGIES	Environment Code sec.706	EQc1	Comply with entry, cross-contamination, filtration, natural ventilation, mixed-mode requirements.	LEED EQc1 (1 pt)	LEED EQc1 (1 pt)	*n/r*	
INDOOR ENVIRONMENTAL QUALITY	CONSTRUCTION IAQ MANAGEMENT PLAN	Environment Code sec.706	EQc3	During construction, meet SMACNA IAQ guidelines; provide MERV-8 filters on all HVAC.	LEED EQc3	LEED EQc3	*n/r*	
INDOOR ENVIRONMENTAL QUALITY	IAQ ASSESSMENT	Environment Code sec.706	EQc4	Before occupancy, test air quality for particulates, ozone, CO, and all listed VOCs.	LEED EQc4 (2 pts)	LEED EQc4 (2 pts)	*n/r*	

VERIFICATION

PROJECT NAME

BLOCK/LOT

ADDRESS

PRIMARY OCCUPANCY

BUILDING GROSS FLOOR AREA

LEED PROJECTS

Projects ≥10,000 square feet

I understand Environment Code Chapter7 requires all applicable projects ≥10,000 square feet to attain LEED Gold certification from USGBC/GBCI. No Green Building Compliance Professional of Record is required.

PROJECT MANAGER *(name)*

PROJECT MANAGER *(sign & date)*

PROJECT MANAGER AGENCY

NON-LEED PROJECTS

Projects <10,000 square feet, receiving a waiver, or not meeting LEED MPR's

This project is not required to obtain LEED certification because it is <10,000 square feet, does not meet LEED Minimum Program Requirements, and/or received a waiver from Environment Code Chapter 7 from the Director of Department of Environment. An informational LEED scorecard will be submitted to the Municipal Green Building Task Force at 100% concept design and as-built without requirement for further LEED documentation or certification.

PROJECT MANAGER *(name)*

PROJECT MANAGER *(sign & date)*

PROJECT MANAGER AGENCY

Green Building Compliance Professional of Record

I have been retained by the project sponsor to review all submittal documents and verify that all approved construction documents and construction fulfill the requirements of the San Francisco Green Building Code. It is my professional opinion that the requirements of the San Francisco Green Building Code will be met. I will notify the Department of Building Inspection if the project will, for any reason, not substantially comply with these requirements, if I am no longer the Green Building Compliance Professional of Record for the project, or if I am otherwise no longer responsible for assuring the compliance of the project with the San Francisco Green Building Code.

LICENSED PROFESSIONAL *(sign & date)*

AFFIX STAMP BELOW:

BUREAU OF ARCHITECTURE

SAN FRANCISCO PUBLIC WORKS

Ron Alameida - City Architect

Julia Laue - Principal Architect / Bureau Manager

49 S Van Ness Ave., Suite 1100, San Francisco, CA 94103
Phone (628)271-2865

Golden Gate Park Golf Clubhouse

970 47th Avenue
San Francisco, CA 94121

Consultant

95% CD 11.16.2020

No.	Date	Revisions

PM Noah Levy

PA Paul DeFreitas

Drawn Author

Checked Checker

NOT FOR CONSTRUCTION

Drawing Title

LEED CHECKLIST

Sheet No. G 1.30

Scale:

Project No. 1804

C:\Users\eharriso\Documents\1804_GGP_GC_CLUBHOUSE_R18_eharriso.rvt
11/2/2020 6:19:13 PM

Original Sheet Size: 22"x34"

BUREAU OF ARCHITECTURE

SAN FRANCISCO PUBLIC WORKS

Ron Alameida - City Architect

Julia Laue - Principal Architect / Bureau Manager

49 S Van Ness Ave., Suite 1100, San Francisco, CA 94103
Phone (628)271-2865

Golden Gate Park Golf Clubhouse

970 47th Avenue
San Francisco, CA 94121

Consultant

95% CD 11.16.2020

No.	Date	Revisions

PM Noah Levy

PA Paul DeFreitas

Drawn Author

Checked Checker

NOT FOR CONSTRUCTION

Drawing Title

TITLE-24 FORMS

Sheet No.

G 1.40

Scale:

Project No.

1804

C:\Users\eharriso\Documents\1804_GGP_GC_CLUBHOUSE_R18_eharriso.rvt
11/2/2020 6:19:14 PM

Original Sheet Size: 22"x34"

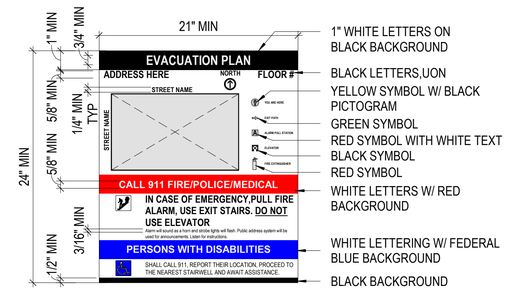

EVACUATION SIGN NOTES:

1. ALL EVAC SIGNS SHALL COMPLY W/ SFFD ADMIN BULLETIN 2.11 AND BE SUBMITTED BY A CONTRACTOR AS A SEPARATE PERMIT.
2. REVIEW BULLETIN FOR ALL SYMBOLS AND COLORS NOT REPRESENTED IN DRAWING ABOVE SUCH AS STAIRS, EXIT SYMBOL AND 'AREA OF REFUGE'.
4. FLOOR PLAN SYMBOLS SHALL HAVE A MIN WIDTH, HEIGHT, DIAMETER OF 1/2".
5. LEGEND SYMBOLS SHALL HAVE A MIN WIDTH, HEIGHT, AND DIAMETER OF 5/8".
6. 1/16" LINE THICKNESS FOR PLAN, EXIT STAIRS, & ELEVATORS.
7. SIGNS SHALL BE INSTALLED WITH CORRECT ORIENTATION AS VIEWED FROM OCCUPANTS PERSPECTIVE.

1 EMERGENCY EVACUATION SIGN

1 1/2" = 1'-0" **DAC APPROVED R06 2019.08.01**

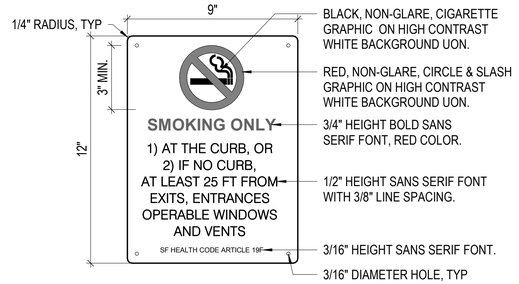

NO SMOKING SIGN NOTES:

1. USE STAINLESS STEEL VANDAL RESISTANT FASTENERS.
2. MOUNT SIGN WITHIN 10 FEET OF EACH ENTRANCE.
3. POST 5'-0" MIN. AND 8'-0" MAX AFF.
4. CHARACTERS AND BACKGROUND CONTRAST BLACK ON WHITE.
   USE THE FOLLOWING COLORS:
   WHITE: WHITE COLOR NO. 17875 IN FEDERAL STANDARD 595B.
   RED: RED COLOR NO. 21105 IN FEDERAL STANDARD 595C.
   BLACK: NO. 17038 IN FEDERAL STANDARD 595B.
5. TEXT FORMAT IS HORIZONTAL.
6. 1" CLEARANCE AROUND ALL BORDERS BETWEEN EDGE OF SIGN. AND CHARACTERS OR NON SMOKING GRAPHIC.

2 NO SMOKING SIGN

3" = 1'-0" **DAC CUSTOM 2019.08.01**

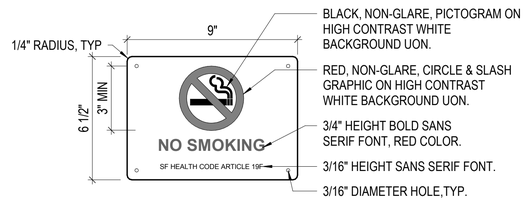

NO SMOKING SIGN NOTES:

1. USE STAINLESS STEEL VANDAL RESISTANT FASTENERS.
2. MOUNT SIGN WHERE NOTED ON DRAWINGS.
3. POST 5'-0" MIN AND 8'-0" MAX AFF.
4. CHARACTERS AND BACKGROUND CONTRAST BLACK ON WHITE.
   USE THE FOLLOWING COLORS:
   WHITE: WHITE COLOR NO. 17875 IN FEDERAL STANDARD 595B.
   RED: RED COLOR NO. 21105 IN FEDERAL STANDARD 595C.
   BLACK: NO. 17038 IN FEDERAL STANDARD 595B.
5. TEXT FORMAT IS HORIZONTAL.
6. 1" CLEARANCE AROUND ALL BORDERS BETWEEN EDGE OF SIGN. AND CHARACTERS OR NON SMOKING GRAPHIC.

3 NO SMOKING SIGN - SECONDARY

3" = 1'-0" **DAC CUSTOM 2019.08.01**

BUREAU OF ARCHITECTURE

SAN FRANCISCO PUBLIC WORKS

Ron Alameida - City Architect

Julia Laue - Principal Architect / Bureau Manager

30 Van Ness Ave., Suite 4100, San Francisco, CA 94102
Fax (415)557-4701, Phone (415)557-4700

Golden Gate Park Golf Clubhouse

970 47th Avenue
San Francisco, CA 94121

Consultant

11.16.2020

No.	Date	Revisions

PM Noah Levy
PA Paul DeFreitas
Drawn Author
Checked Checker

NOT FOR CONSTRUCTION

Drawing Title

MISCELLANEOUS SIGNAGE

Sheet No.

G 3.13

Scale: As indicated

Project No.

1804

Original Sheet Size: 22"x34"

C:\Users\eharriso\Documents\1804_GGP_GC_CLUBHOUSE_R18_eharriso.rvt
11/2/2020 6:19:15 PM

LANDSCAPE GENERAL NOTES AND ABBREVIATIONS & INDEX

GENERAL NOTES

ALL WORK SHALL BE COMPLETED IN A THOROUGH AND WORKMANLIKE MANNER.

ALL WORK TO BE PERFORMED SHALL CONFORM TO ALL APPLICABLE CODES AND ORDINANCES OF GOVERNMENTAL AGENCIES HAVING JURISDICTION OVER THE PROJECT.

PROTECT ALL UTILITIES, IMPROVEMENTS, STRUCTURES AND STREET CURB/SIDEWALK AND RESTORE TO NEW CONDITION AT NO ADDITIONAL COST TO THE CITY IF DAMAGED DURING THE COURSE OF WORK.

COORDINATE ALL WORK TO PREVENT CONFLICTS BETWEEN TRADES AND REPORT CONFLICTS OR INCONGRUITIES BETWEEN NEW IMPROVEMENTS AND/OR EXISTING FACILITIES TO THE CITY REPRESENTATIVE IMMEDIATELY.

THE CONTRACTOR IS RESPONSIBLE FOR THE COORDINATION AND INSTALLATION OF ALL PLUMBING AND ELECTRICAL ITEMS TO BE INSTALLED AS A PART OF THIS WORK.

CLEAR AND REMOVE ALL ORGANIC MATTER, DEBRIS AND RUBBISH FROM WITHIN THE LIMIT OF WORK. CONTRACTOR SHALL DISPOSE OF SAID MATERIAL IN A LEGAL MANNER AS HIS PROPERTY.

IN ADDITION TO THESE DRAWINGS, REFER TO CCSF STANDARD SPECIFICATIONS.

DEMOLITION NOTES

PROTECT ALL SITE ELEMENTS TO REMAIN.

PROVIDE CONSTRUCTION FENCING AT LIMIT OF WORK LINE THROUGHOUT CONSTRUCTION PERIOD. SEE SPEC # 015000 FOR MORE INFORMATION.

ALL MATERIALS SHALL BE DISPOSED OF IN A LEGAL MANNER AS CONTRACTOR'S PROPERTY.

PRIOR TO THE COMMENCEMENT OF WORK, A THOROUGH SITE REVIEW OF ALL EXISTING PLANT MATERIAL DESIGNATED TO BE REMOVED SHALL BE CONDUCTED WITH THE LANDSCAPE ARCHITECT. OBTAIN AUTHORIZATION FROM LANDSCAPE ARCHITECT AND RECREATION AND PARK STAFF PRIOR TO DEMOLITION OF ANY EXISTING PLANT MATERIAL

LAYOUT NOTES

VERIFY ALL DIMENSIONS IN THE FIELD PRIOR TO BEGINNING CONSTRUCTION AND REPORT ANY DISCREPANCIES TO THE CITY REPRESENTATIVE PRIOR TO PROCEEDING.

WRITTEN DIMENSIONS ON DRAWINGS SUPERSEDE SCALE DIMENSIONS.

ALL DIMENSIONS ARE TO BE MEASURED HORIZONTALLY.

VERIFY LOCATION AND ELEVATIONS OF UTILITY VAULTS AND OTHER COVERS AND REPORT ANY CONFLICTS OR DISCREPANCIES TO THE CITY REPRESENTATIVE.

PLACE EXPANSION JOINTS WHERE ALL HORIZONTAL PAVING ABUTS A VERTICAL SURFACE AND AS SHOWN ON PLANS. JOINTS SHALL BE 3/8" PRE-MOLDED ASPHALTIC FIBER MATERIAL.

THE CONTRACTOR SHALL STAKE ALL PAVED AREAS AND FOOTINGS FOR REVIEW BY THE CITY REPRESENTATIVE BEFORE FINAL CONSTRUCTION.

GRADING NOTES

VERIFY ALL GRADES IN THE FIELD BEFORE PROCEEDING WITH WORK, INCLUDING EXISTING IMPROVEMENTS; LOCATIONS AND ELEVATIONS OF AREA DRAINS.

EXISTING GRADES SHOWN ARE APPROXIMATE AND SHALL BE FIELD VERIFIED. ALL DISCREPANCIES SHALL BE REPORTED TO THE CITY REPRESENTATIVE IMMEDIATELY.

THE CONTRACTOR SHALL BE RESPONSIBLE FOR POSITIVE SURFACE DRAINAGE IN ALL PAVING AND PLANTING AREAS. ALL GROUND SURFACES SHALL BE FINISHED TO A SMOOTH AND CONTINUOUS GRADE, DRAINING AND FREE OF STANDING WATER.

PROVIDE A SMOOTH TRANSITION BETWEEN EXISTING AND NEW GRADES IN PLANTING AREAS. WHERE NEW PAVEMENT ABUTS NEW PAVEMENT, FINISH GRADES SHALL BE FLUSH, UNLESS OTHERWISE NOTED. EASE TOP AND TOE OF ALL SLOPES TO PROVIDE SMOOTH TRANSACTIONS BETWEEN GROUND PLANES.

THE CITY REPRESENTATIVE RESERVES THE RIGHT TO MAKE ADJUSTMENTS IN THE FINISHED GRADES AS THE WORK PROGRESSES.

ELEVATIONS ARE BASED ON CITY AND COUNTY OF SAN FRANCISCO DATUM, UNLESS OTHERWISE NOTED.

PLANTING NOTES

SEE STANDARD SPECIFICATIONS, SECTION 32 90 00 "PLANTING", FOR ADDITIONAL PLANTING INFORMATION.

CONTRACTOR SHALL REVIEW ALL PLANT MATERIAL ON SITE WITH CITY REPRESENTATIVE AND SHALL INSTALL MATERIAL ONLY AFTER OBTAINING APPROVAL FROM THE CITY REPRESENTATIVE. LOCATIONS SHOWN ON PLANS ARE DIAGRAMMATIC ONLY.

THE CITY REPRESENTATIVE RESERVES THE RIGHT TO MAKE SUBSTITUTIONS, LAYOUT CHANGES AND DELETIONS IN THE PLANTING SCHEME AS THE WORK PROGRESSES.

UNLESS OTHERWISE NOTED, ALL GROUNDCOVER AND SHRUBS SHALL BE SPACED TRIANGULARLY.

ALL NEWLY PLANTED GROUND COVER AND SHRUB AREAS TO RECEIVE 3" MIN. COMPACTED, SHREDDED BARK U.O.N. AND CARDBOARD, SEE SPECIFICATIONS.

RESTORATION OF LANDSCAPE AREAS

RESTORE ALL EXISTING PAVING, WALLS, FENCES, PLANTING DISTURBED BY UTILITY TRENCHING, TREE REMOVAL, OR STAGING AREA TO PRECONSTRUCTION CONDITION AS DIRECTED BY THE CITY REPRESENTATIVE.

RESTORE ALL DISTURBED LANDSCAPE AREAS WITHIN THE LIMIT OF WORK AND ALL LANDSCAPE AREAS DISTURBED BY CONSTRUCTION ACTIVITIES AND STAGING, AS FOLLOWS: THE DISTURBED LANDSCAPE AREAS SHALL BE WEEDED, CULTIVATED, FINE GRADED FLUSH TO ADJACENT FINISH GRADE WITH NO VOIDS, DEPRESSIONS OR MOUNDS, PLANTED AND MAINTAINED THROUGHOUT THE CONSTRUCTION PERIOD.

THE CITY REP. IN COORDINATION WITH RECREATION & PARK STAFF SHALL INSPECT THE PREPARATION OF DISTURBED LANDSCAPE AREAS PER THESE NOTES AND THE CONTRACTOR SHALL MAKE ADJUSTMENTS AS DIRECTED BY THE CITY REPRESENTATIVE.

ABBREVIATIONS

AD	AREA DRAIN
ALIGN.	ALIGNMENT
BFG	BELOW FINISH GRADE
CCSF	CITY & COUNTY OF SAN FRANCISCO
C, ℄	CENTER LINE
CB	CATCH BASIN
CLR.	CLEAR
CONC.	CONCRETE
CONT.	CONTINUOUS
C.J.	CONTROL JOINT
DIA., Ø	DIAMETER
DWG	DRAWING
(E)	EXISTING
E	EASTING
EA	EACH
E.F.	EACH FACE
E.J.	EXPANSION JOINT
EQ	EQUAL
E.W.	EACH WAY
F.G.	FINISH GRADE
FOC	FACE OF CURB
FOW	FACE OF WALL
FTG.	FOOTING
GALV.	GALVANIZED
G.M.	GRAVEL MULCH
JT.	JOINT
L.O.W.	LIMIT OF WORK
MAX.	MAXIMUM
MIN.	MINIMUM
MH	MANHOLE
(N)	NEW
N	NORTHING
N.I.C.	NOT IN CONTRACT
NO., #	NUMBER
N.T.S.	NOT TO SCALE
NKE	NO KNOWN EQUAL
O.C.	ON CENTER
O.D.	OUTSIDE DIAMETER
P.A.	PLANTING AREA
POB	POINT OF BEGINNING
R, RAD.	RADIUS
R/R	REMOVE/REPLACE
SD	STORM DRAIN
SAD	SEE ARCHITECTURAL DRAWINGS
SSD	SEE STRUCTURAL DRAWINGS
SIM.	SIMILAR
S.J.	SCORE JOINT
SPECS.	SPECIFICATIONS
ST.	STREET
TYP.	TYPICAL
U.O.N.	UNLESS OTHERWISE NOTED
V.I.F.	VERIFY IN FIELD
W/	WITH
⌒	FLUSH OR ALIGNED

LANDSCAPE ARCHITECTURE SHEET INDEX

L0.0	LANDSCAPE NOTES AND ABBREVIATIONS
L1.0	DEMOLITION PLAN
L2.0	LAYOUT & MATERIALS PLAN
L3.0	GRADING PLAN
L4.0	IRRIGATION PLAN
L4.1	IRRIGATION LEGEND & NOTES
L5.0	PLANTING PLAN
L5.1	PLANTING DETAILS
L6.0 - L6.3	CONSTRUCTION DETAILS

BUILDING DESIGN AND CONSTRUCTION DIVISION

BUREAU OF LANDSCAPE ARCHITECTURE

SAN FRANCISCO PUBLIC WORKS

Ron Alameda - City Architect

Jennifer Cooper - Bureau Manager

30 Van Ness Ave., Suite 3000, San Francisco, CA 94102
Fax (415)557-4701, Phone (415)557-4700

Project

Golden Gate Park Golf Clubhouse

970 47th Avenue
San Francisco, CA 94121

Consultant

Bureau Mgr.

Section Mgr.

95% CD SET 11/02/20

No.	Date	Revisions

Proj. L.Arch. LH

Designed LH

Drawn VC

Checked

NOT FOR CONSTRUCTION

Drawing Title

LANDSCAPE GENERAL NOTES, ABBREVIATIONS & INDEX

Sheet No.

L0.0

Scale: AS NOTED

Project No.

1804

Original Sheet Size: 22"x34"

Drawing name: \\dpw.ci.sf.ca.us\boa\Data\Projects\PW-RPD-1804-GGP-Golf Course-Clubhouse\5.0_Design\5.01_Current\ACAD\Landscape\1804_L-1.0_DEMO.dwg Plotted on: Nov 02, 2020 - 4:52pm

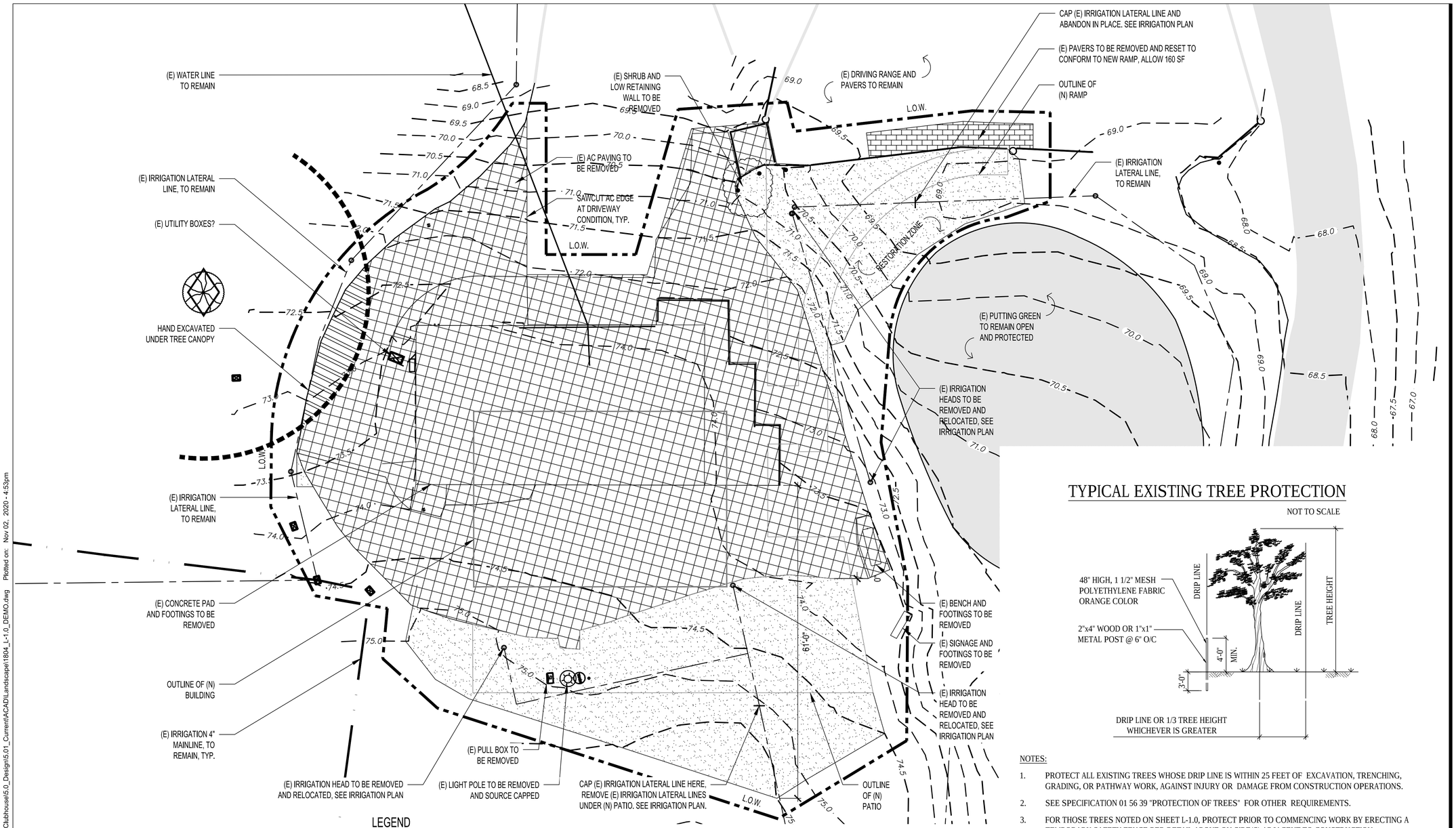

LEGEND

- LIMIT OF WORK
- TREE PROTECT FENCE
- PROTECT EXISTING TREE. SEE DETAIL AND NOTES
- HAND EXCAVATE UNDER TREE CANOPY
- U.O.N. REMOVE ALL PAVING & BASE MATERIAL, CONC. WALLS, CURBS, STEPS, FOOTINGS, PLAY STRUCTURES, SAND, SITE FURNIGHINGS, AND EXISTING SITE ELEMENTS TO ACCOMMODATE ALL NEW CONSTRUCTION. REFER TO L2.0
- REMOVE (E) LAWN TO ACCOMMODATE ALL NEW CONSTRUCTION. REFER TO L2.0
- (E) PAVERS TO BE REMOVED AND RESET TO CONFORM TO NEW RAMP, ALLOW 160 SF

TYPICAL EXISTING TREE PROTECTION

NOT TO SCALE

NOTES:

1. PROTECT ALL EXISTING TREES WHOSE DRIP LINE IS WITHIN 25 FEET OF EXCAVATION, TRENCHING, GRADING, OR PATHWAY WORK, AGAINST INJURY OR DAMAGE FROM CONSTRUCTION OPERATIONS.
2. SEE SPECIFICATION 01 56 39 "PROTECTION OF TREES" FOR OTHER REQUIREMENTS.
3. FOR THOSE TREES NOTED ON SHEET L-1.0, PROTECT PRIOR TO COMMENCING WORK BY ERECTING A TEMPORARY SAFETY FENCE PER DETAIL ABOVE ON SIDE(S) ADJACENT TO CONSTRUCTION.
4. PRIOR TO ANY DEMOLITION, CONTRACTOR TO OBTAIN WRITTEN APPROVAL BY CITY REPRESENTATIVE OF TREE PROTECTION LAYOUT.
5. FOR THOSE TREES NOTED ON SHEET L-1.0, NO VEHICLES OR MECHANICAL EQUIPMENT ARE PERMITTED ANY CLOSER TO A TREE THAN 1/3 OF TREE HEIGHT OR TREE DRIP LINE, WHICHEVER DISTANCE IS GREATER. SHOULD VEHICLES OR EQUIPMENT (OTHER THAN MECHANICAL TRENCHING) BE NECESSARY WITHIN THIS PROXIMITY OF A TREE, A 4 INCH DEEP LAYER OF APPROVED BARK MUCH SHALL BE APPLIED OVER THE AREA TO BE USED BY SUCH VEHICLES OR EQUIPMENT AFTER ASSESSMENT OF CERTIFIED ARBORIST.

10 0 10 20
1" = 10'-0"

N

BUILDING DESIGN AND CONSTRUCTION DIVISION
BUREAU OF LANDSCAPE ARCHITECTURE
SAN FRANCISCO PUBLIC WORKS
Ron Alameda - City Architect
Jennifer Cooper - Bureau Manager
30 Van Ness Ave., Suite 3000, San Francisco, CA 94102
Fax (415)557-4701, Phone (415)557-4700

Project

Golden Gate Park Golf Clubhouse

970 47th Avenue
San Francisco, CA 94121

Consultant

Bureau Mgr.
Section Mgr.

95% CD SET 11/02/20

No.	Date	Revisions

Proj. L.Arch. LH
Designed LH
Drawn VC
Checked

NOT FOR CONSTRUCTION

Drawing Title

DEMOLITION PLAN

Sheet No. L1.0
Scale: AS NOTED
Project No. 1804

Original Sheet Size: 22"x34"

Drawing name: \\dpw.ci.sf.ca.us\toa\Data\Projects\PW-RPD-1804-GGP-Golf Course-Clubhouse\5.0_Design\5.01_Current\ACAD\Landscape\1804_L-1.0_DEMO.dwg Plotted on: Nov 02, 2020 - 4:53pm

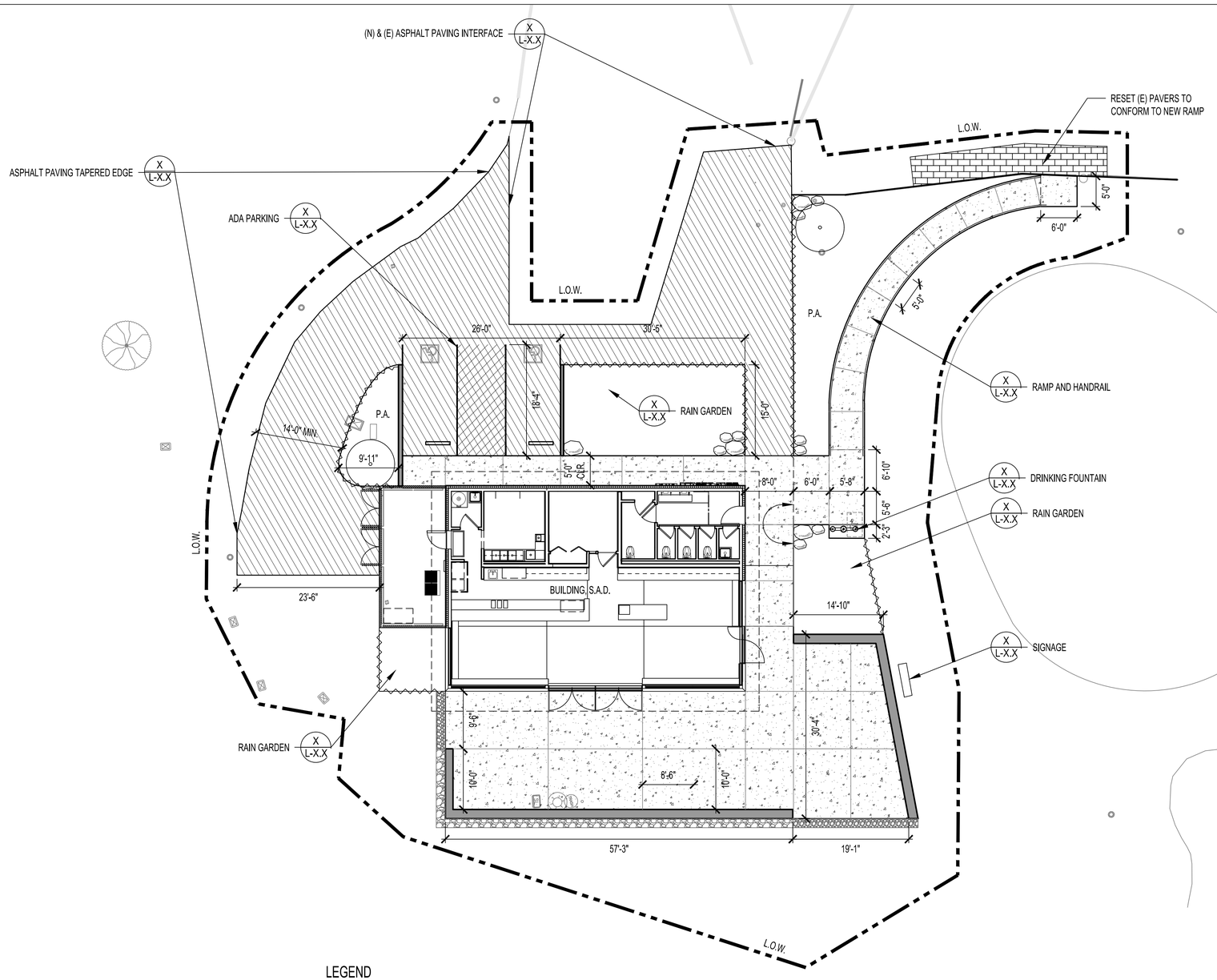

LEGEND

LIMIT OF WORK	AC PAVING (X L-X.X)	BOULDER (X L-X.X)
	CONCRETE PAVING (X L-X.X)	METAL HEADER (X L-X.X)
	CONCRETE SEAT WALL (X L-X.X)	FRENCH DRAIN AT SEAT WALL (X L-X.X)
	CONCRETE CURB (X L-X.X)	FRENCH DRAIN AT PAVING (X L-X.X)

NOTES:

1. XXX

10 0 10 20

1" = 10'-0"

N

Original Sheet Size: 22"x34"

Drawing name: \\dpw.ci.sf.ca.us\boa\Data\Projects\PW-RPD-1804-GGP-Golf Course-Clubhouse\5.0_Design\5.01_Current\ACAD\Landscape\1804_L-2.0_PAVE.dwg Plotted on: Nov 02, 2020 - 4:53pm

BUILDING DESIGN AND CONSTRUCTION DIVISION

BUREAU OF LANDSCAPE ARCHITECTURE

SAN FRANCISCO PUBLIC WORKS

Ron Alameda - City Architect

Jennifer Cooper - Bureau Manager

30 Van Ness Ave., Suite 3000, San Francisco, CA 94102
Fax (415)557-4701, Phone (415)557-4700

Project

Golden Gate Park Golf Clubhouse

970 47th Avenue
San Francisco, CA 94121

Consultant

Bureau Mgr.

Section Mgr.

95% CD SET 11/02/20

No.	Date	Revisions

Proj. L.Arch.	LH
Designed	LH
Drawn	VC
Checked	

NOT FOR CONSTRUCTION

Drawing Title

LAYOUT & MATERIALS PLAN

Sheet No. L2.0

Scale: AS NOTED

Project No. 1804

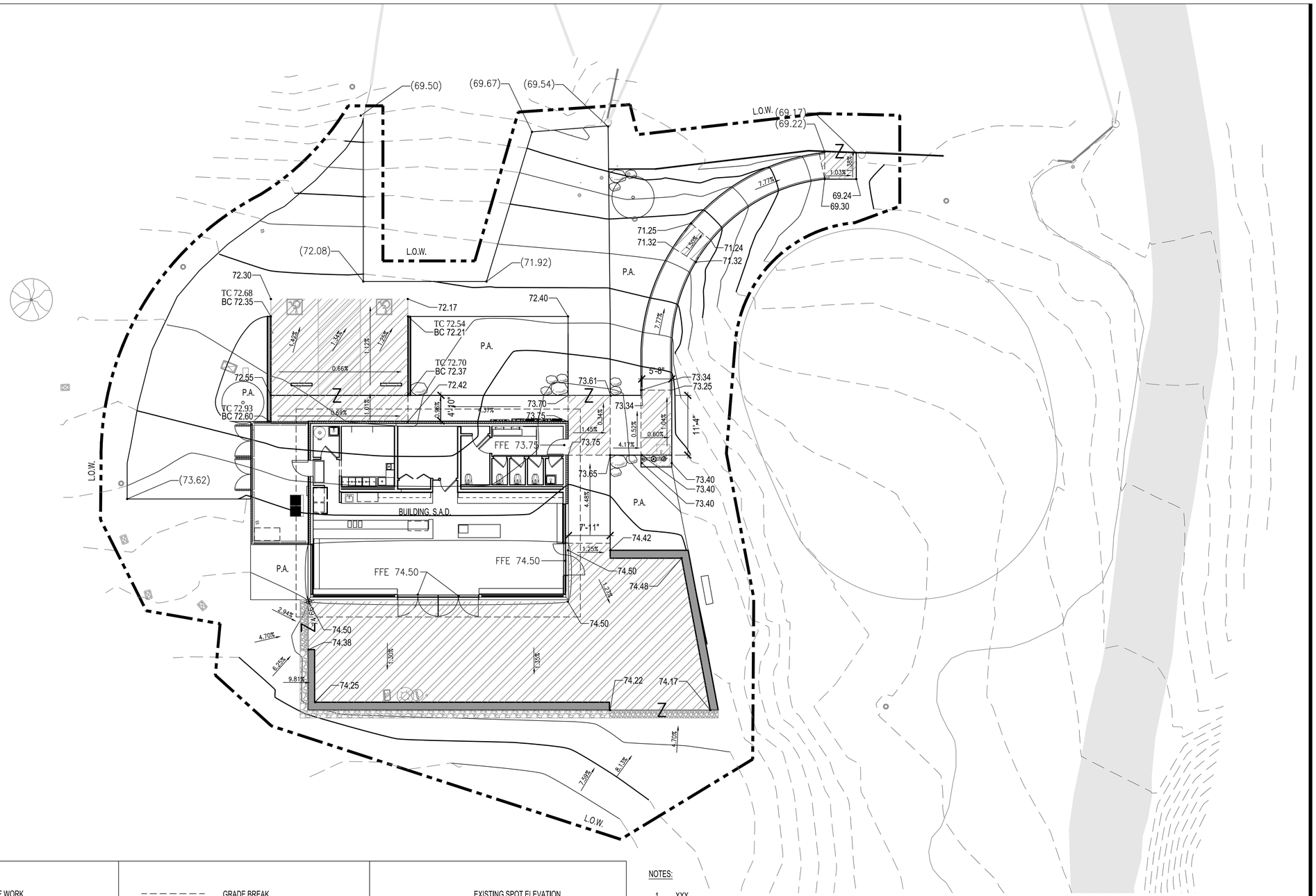

LEGEND

LIMIT OF WORK	GRADE BREAK	EXISTING SPOT ELEVATION
	LANDING, NOT TO EXCEED 1.5% SLOPE IN ANY DIRECTION	NEW SPOT ELEVATION
	Z FLUSH	
	X.XX% PERCENT SLOPE / DIRECTION OF FLOW	

NOTES:

1. XXX

10 0 10 20

1" = 10'-0"

N

Original Sheet Size: 22"x34"

BUILDING DESIGN AND CONSTRUCTION DIVISION

BUREAU OF LANDSCAPE ARCHITECTURE

SAN FRANCISCO PUBLIC WORKS

Ron Alameda - City Architect

Jennifer Cooper - Bureau Manager

30 Van Ness Ave., Suite 3000, San Francisco, CA 94102
Fax (415)557-4701, Phone (415)557-4700

Project

Golden Gate Park Golf Clubhouse

970 47th Avenue
San Francisco, CA 94121

Consultant

Bureau Mgr.

Section Mgr.

95% CD SET 11/02/20

No.	Date	Revisions

Proj. L.Arch. LH

Designed LH

Drawn VC

Checked

NOT FOR CONSTRUCTION

Drawing Title

GRADING PLAN

Sheet No. L3.0

Scale: AS NOTED

Project No. 1804

Drawing name: \\dpw.ci.sf.ca.us\boa\Data\Projects\PW-RPD-1804-GGP-Golf Course-Clubhouse\5.0_Design\5.01_Current\ACAD\Landscape\1804_L-3.0_GRAD.dwg Plotted on: Nov 02, 2020 - 4:53pm

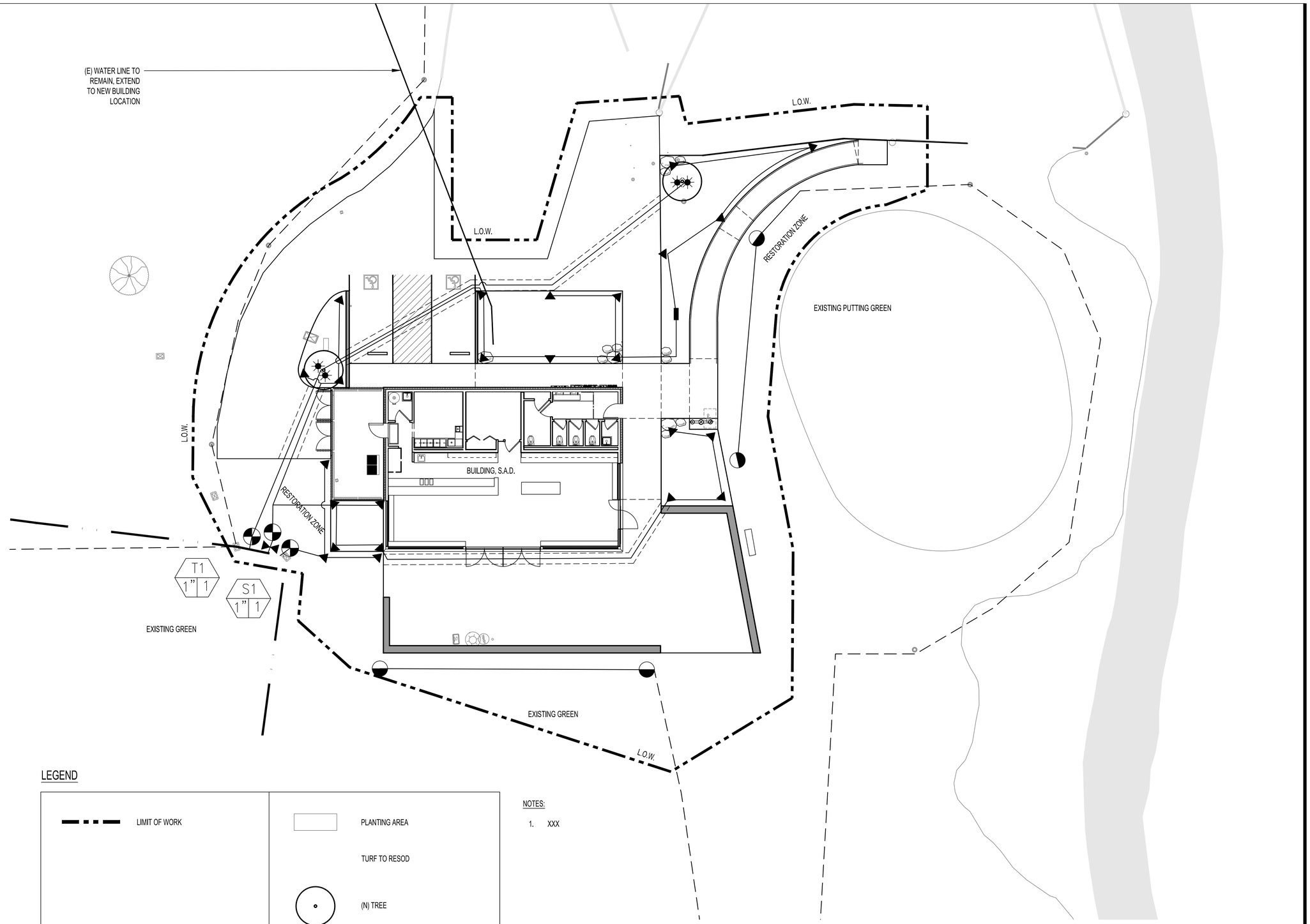

LEGEND

LIMIT OF WORK	PLANTING AREA
	TURF TO RESOD
	(N) TREE

NOTES:

1. XXX

10 0 10 20

1" = 10'-0"

N

Original Sheet Size: 22"x34"

Drawing name: \\dpw.ci.sf.ca.us\boa\Data\Projects\PW-RPD-1804-GGP-Golf Course-Clubhouse\5.0_Design\5.01_Current\ACAD\Landscape\1804_L-4.0_IRRG.dwg Plotted on: Nov 02, 2020 - 4:53pm

BUILDING DESIGN AND CONSTRUCTION DIVISION

BUREAU OF LANDSCAPE ARCHITECTURE

SAN FRANCISCO PUBLIC WORKS

Ron Alameda - City Architect

Jennifer Cooper - Bureau Manager

30 Van Ness Ave., Suite 3000, San Francisco, CA 94102
Fax (415)557-4701, Phone (415)557-4700

Project

Golden Gate Park Golf Clubhouse

970 47th Avenue
San Francisco, CA 94121

Consultant

Bureau Mgr.

Section Mgr.

95% CD SET 11/02/20

No.	Date	Revisions

Proj. L.Arch. LH

Designed LH

Drawn VC

Checked

NOT FOR CONSTRUCTION

Drawing Title

IRRIGATION PLAN

Sheet No.

L4.0

Scale: AS NOTED

Project No.

1804

IRRIGATION LEGEND

KEY: VALVE SIZE — T2 / 1" / 22 — STATION # / GPM

SYMBOL	MANUF.	DESCRIPTION	GPM	EQUAL
▬ ▬ ▬ ▬	–	NEW MAINLINE, HDPE, 2" DIAMETER PLACE AT 24" DEPTH BELOW FINISH GRADE. WHERE MAINLINE CROSSES PATHWAY, PROVIDE HDPE PIPE SLEEVE, SIZED 2 SIZES LARGER THAN MAINLINE	–	
———	–	LATERAL LINE SCH 40 PVC, SIZE LATERALS PER LATERAL PIPING SCHEDULE– PLACE AT 18" DEPTH BELOW FINISH GRADE	–	
– – – – – – – – – – – –	–	IRRIGATION LINE SLEEVING, SCH 80 PVC (UNDER PAVING)	–	
♦	HUNTER	HQ44LRC QUICK COUPLER– 1" YELLOW W/ LOCKABLE CAP	–	BUCKNER/ RAINBIRD
◓	HUNTER	IBV–FS–AS–ADJ BRASS VALVE, SIZE AS INDICATED	–	NO KNOWN EQUAL
⋈	NIBCO	GATE VALVE: T–113, LINE SIZE	–	NO KNOWN EQUAL
▲	HUNTER	MP ROTATOR MP 1000–90–180–360 PROS–12 – PRS40–CV	Q = 0.21 H = 0.42 F = 0.84	NO KNOWN EQUAL
◉ ◒	HUNTER	I–20–06–SS–PRB	3.0	NO KNOWN EQUAL
✷	HUNTER	HUNTER ROOT WATERING SYSTEM (RWS), INSTALL 2 PER TREE. .50 GPM BUBBLER	0.5000	NO KNOWN EQUAL

LATERAL PIPE SIZING SCHEDULE

GPM	PIPE SIZE (SCH 40 PVC) DOWNSTREAM OF RCV
8 OR LESS	3/4" ø
13	1" ø
23	1 1/4" ø
32	1 1/2" ø
53	2" ø
74	2 1/2" ø
116 OR MORE	3" ø

NOTE:
IRRIGATION PIPING DOWNSTREAM OF THE REMOTE CONTROL UNIT SHALL BE SIZED PER THE CHART ABOVE WHEN NOT INDICATED ON THE PLAN DRAWINGS. REFER TO THE IRRIGATION LEGEND FOR SPRINKLER FLOW RATES (GPM). NO PIPING DOWNSTREAM OF THE REMOTE CONTROL VALVE TO THE SPRINKLER SHALL BE SIZED SMALLER THAN THE SPRINKLER THREADED INLET SIZE.

IRRIGATION NOTES

1. THESE NOTES AND IRRIGATION PLAN GOVERN IRRIGATION INSTALLATION ONLY AND ARE NOT INTENDED TO GOVERN OTHER WORK.
2. VERIFY LOCATIONS OF POINT OF CONNECTION AND MAIN LINES, PARTICULARLY IN RELATION TO THE PROPOSED METER PRIOR TO COMMENCEMENT OF WORK. ANY DISCREPANCY BETWEEN THE DRAWINGS AND FIELD CONDITIONS WHICH AFFECTS IRRIGATION LAYOUT SHALL BE BROUGHT TO THE ATTENTION OF THE CITY REPRESENTATIVE PRIOR TO THE INSTALLATION OF ANY PIPE. THE CONTRACTOR IS RESPONSIBLE FOR THE INSTALLATION OF AN IRRIGATION SYSTEM THAT PROVIDES 100% COMPLETE, HEAD TO HEAD COVERAGE TO ALL PLANTED AREAS. THE WORK OF THE CONTRACT SHALL INCLUDE ADJUSTMENTS TO THE SYSTEM INDICATED, INCLUDING QUANTITIES OF PIPING, HEADS, NOZZLES & OTHER EQUIPMENT, AS NECESSARY TO ASSURE COMPLETE COVERAGE WITHOUT ADDITIONAL COST TO THE CONTRACT.
3. THE PLANS INDICATE A 100% NEW IRRIGATION SYSTEM UTILIZING A (N) 2" IRRIGATION METER. THE SYSTEM WAS CALCULATED FOR 40–70 PSI. ALERT THE CITY REPRESENTATIVE IF THIS PRESSURE DIFFERS FROM THE SITE CONDITION DOWNSTREAM OF THE BACKFLOW PREVENTER.
4. ALERT THE CITY REPRESENTATIVE PRIOR TO TRENCHING, DEMO AND REMOVAL OF ANY PARTS OF THE EXISTING IRRIGATION SYSTEM FOR THE PURPOSE OF SALVAGING EXISTING HEADS AND USABLE EQUIPMENT. SALVAGE EQUIPMENT AT THE DIRECTION OF THE CITY REPRESENTATIVE. ABANDON EXISTING UNDERGROUND PORTIONS OF THE IRRIGATION SYSTEM IN PLACE AS REQUIRED, REMOVE AND DISPOSE OF UNDERGROUND EQUIPMENT WHERE CONFLICTS OCCUR AND DISPOSE OFFSITE PER LOCAL CODES AND AS THE CONTRACTOR'S OWN PROPERTY.
5. THE IRRIGATION DRAWINGS ARE DIAGRAMMATIC AND DO NOT SHOW EXACT LOCATIONS OF PIPING, VALVES OR CONTROL LINES. INSTALL THESE ITEMS PARALLEL TO AND AS CLOSELY AS POSSIBLE TO CURBS, HEADERS OR PAVING EDGES AND WITHIN PLANTED AREAS UNLESS OTHERWISE INDICATED, REFER TO IRRIGATION DETAILS. VERIFY IN FIELD THE EXACT LOCATIONS OF VALVE BOXES, GATE VALVES AND QUICK COUPLERS WITH THE CITY REPRESENTATIVE PRIOR TO INSTALLATION.
6. IRRIGATION HEAD LOCATIONS ARE INDICATED AS ACCURATELY AS POSSIBLE ON THE DRAWINGS. INSTALL HEADS AS INDICATED BY THE CENTERLINE OF THE SYMBOL AND IN ACCORDANCE WITH INSTALLATION DETAILS AND MANUFACTURER'S RECOMMENDATIONS.
7. COORDINATE WORK WITH ALL APPROPRIATE TRADES FOR THE INSTALLATION OF PIPING, PIPE SLEEVES AND ELECTRICAL CONDUIT.
8. INSTALL ALL OTHER CONTROL WIRING IN SCH 40 PVC SLEEVING OF SUFFICIENT SIZE FOR EASY INSERTION AND REMOVAL.
9. INSTALL EACH SOLENOID VALVE IN A SEPARATE VALVE BOX PER DETAIL.
10. POP–UP SPRINKLER HEIGHT: INSTALL 12" IN GROUND COVER/ SHRUB AREAS, 6" IN LAWN AREAS.
11. THE IRRIGATION SYSTEM HAS BEEN DESIGNED FOR 40–45 PSI AND A MAXIMUM GPM OF 33. NOTIFY THE CITY REPRESENTATIVE IMMEDIATELY, IF THERE ARE DISCREPANCIES.
12. PROVIDE TEMPORARY FENCING AS AS REQUIRED DURING TRENCHING AND CONSTRUCTION FOR SAFETY OF PUBLIC PER CCSF STANDARD SPECIFICATIONS. ALERT CITY REPRESENTATIVE PRIOR TO CONSTRUCTION.
13. ALL NEW AND RELOCATED TREES SHALL RECEIVE BUBBLER IRRIGATION PER THE SPECIFICATIONS AND DRAWINGS.
14. CONTRACTOR TO REPAIR ANY PART OF THE IRRIGATION SYSTEM TO REMAIN THAT IS DAMAGED DURING CONSTRUCTION.
15. IRRIGATION PIPING DOWNSTREAM OF THE REMOTE CONTROL VALVE SHALL BE SIZED PER THE LATERAL PIPE SIZING SCHEDULE.
16. REFER TO THE IRRIGATION LEGEND FOR SPRINKLER FLOW RATES (GPM). NO PIPING DOWNSTREAM OF THE REMOTE CONTROL VALVE TO THE SPRINKLER SHALL BE SIZED SMALLER THAN THE SPRINKLER THREADED INLET SIZE.

BUILDING DESIGN AND CONSTRUCTION DIVISION
BUREAU OF LANDSCAPE ARCHITECTURE
SAN FRANCISCO PUBLIC WORKS
Ron Alameda - City Architect
Jennifer Cooper - Bureau Manager
30 Van Ness Ave., Suite 3000, San Francisco, CA 94102
Fax (415)557-4701, Phone (415)557-4700

Project
Golden Gate Park Golf Clubhouse
970 47th Avenue
San Francisco, CA 94121

Consultant

Bureau Mgr.
Section Mgr.

95% CD SET 11/02/20

No.	Date	Revisions

Proj. L.Arch. LH
Designed LH
Drawn VC
Checked

NOT FOR CONSTRUCTION

Drawing Title
IRRIGATION LEGEND & NOTES

Sheet No.
L4.1
Scale: AS NOTED
Project No.
1804

Drawing name: \\dpw.ci.sf.ca.us\boa\Data\Projects\PW-RPD-1804-GGP-Golf Course-Clubhouse\5.0_Design\5.01_Current\ACAD\Landscape\1804_L-4.0_IRRG.dwg Plotted on: Nov 02, 2020 - 4:53pm

Original Sheet Size: 22"x34"

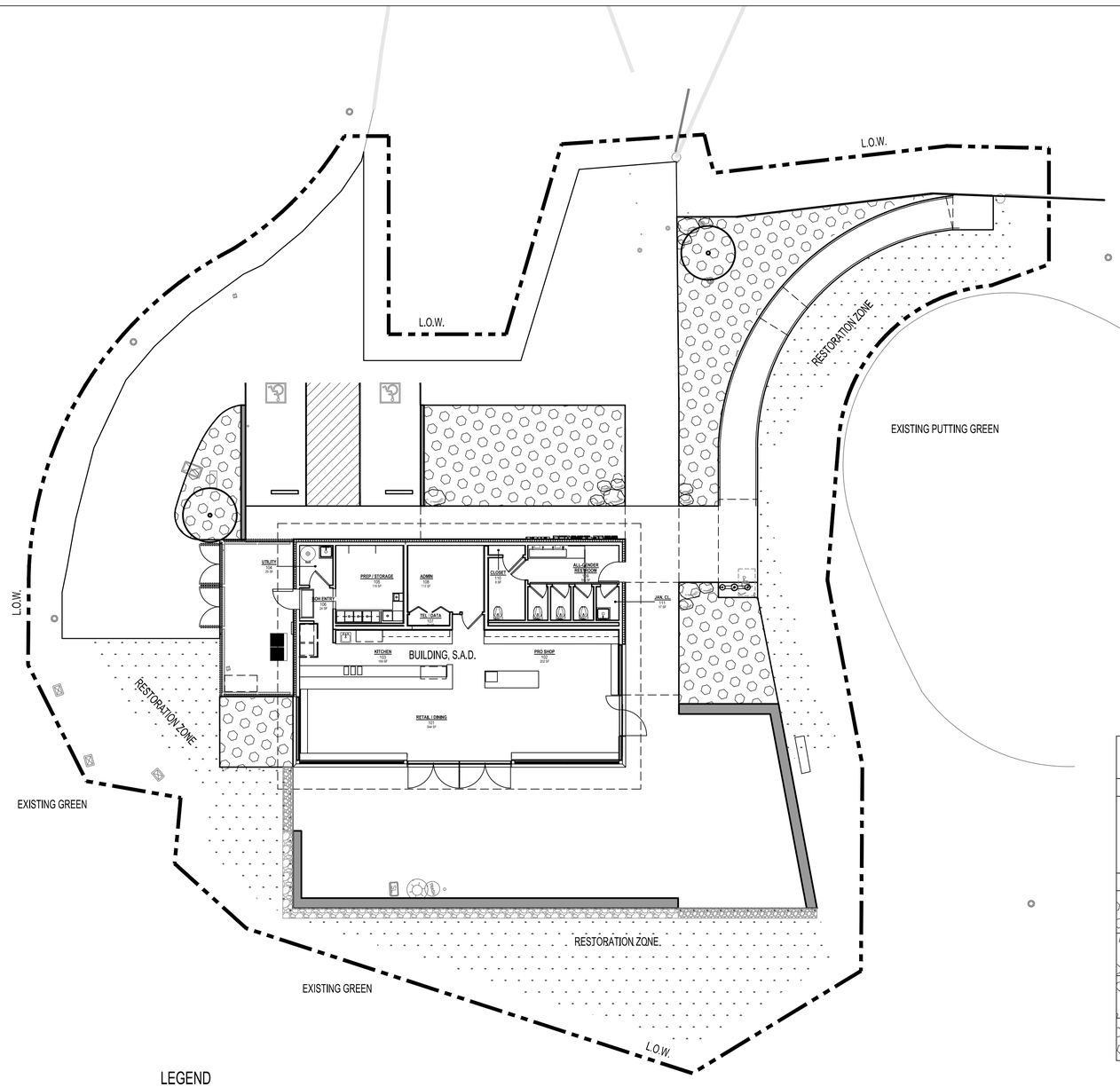

LEGEND

- LIMIT OF WORK
- RAIN GARDEN
- PLANTING AREA
- TURF TO RESOD, SEE SPECS.
- (N) TREE

NOTES:

1. XXX

SYMBOL	QUANTITY	BOTANICAL NAME	COMMON NAME	SPACING	WATER USE
TREES					
○	2	*AESCULUS CALIFORNICA*	CALIFORNIA BUCKEYE	-	VERY LOW
PLANTS					
	312	*ACHILLEA MILLEFOLIUM*	COMMON YARROW	1' - 0"	LOW
	185	*FESTUCA MAIREI* 'GREENLEE FORM'	ATLAS FESCUE	2' - 0"	LOW
	312	*LIBERTIA PEREGRINANS*	ORANGE LIBERTIA	1' - 0"	LOW
	185	*SESLERIA AUTUMNALIS*	AUTUMN MOOR GRASS	2' - 0"	MODERATE

10 0 10 20
1" = 10'-0"

N

BUILDING DESIGN AND CONSTRUCTION DIVISION
BUREAU OF LANDSCAPE ARCHITECTURE
SAN FRANCISCO PUBLIC WORKS
Ron Alameda - City Architect
Jennifer Cooper - Bureau Manager
30 Van Ness Ave., Suite 3000, San Francisco, CA 94102
Fax (415)557-4701, Phone (415)557-4700

Project

Golden Gate Park Golf Clubhouse

970 47th Avenue
San Francisco, CA 94121

Consultant

Bureau Mgr.
Section Mgr.

95% CD SET 11/02/20

No.	Date	Revisions

Proj. L.Arch. LH
Designed LH
Drawn VC
Checked

NOT FOR CONSTRUCTION

Drawing Title

PLANTING PLAN

Sheet No. L5.0

Scale: AS NOTED

Project No. 1804

Original Sheet Size: 22"x34"

Drawing name: \\dpw.ci.sf.ca.us\boa\Data\Projects\PW-RPD-1804-GGP-Golf Course-Clubhouse\5.0_Design\5.01_Current\ACAD\Landscape\1804_L-5.0_PLNT.dwg Plotted on: Nov 02, 2020 - 4:54pm

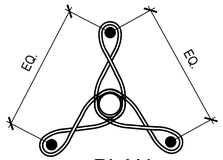

PLAN

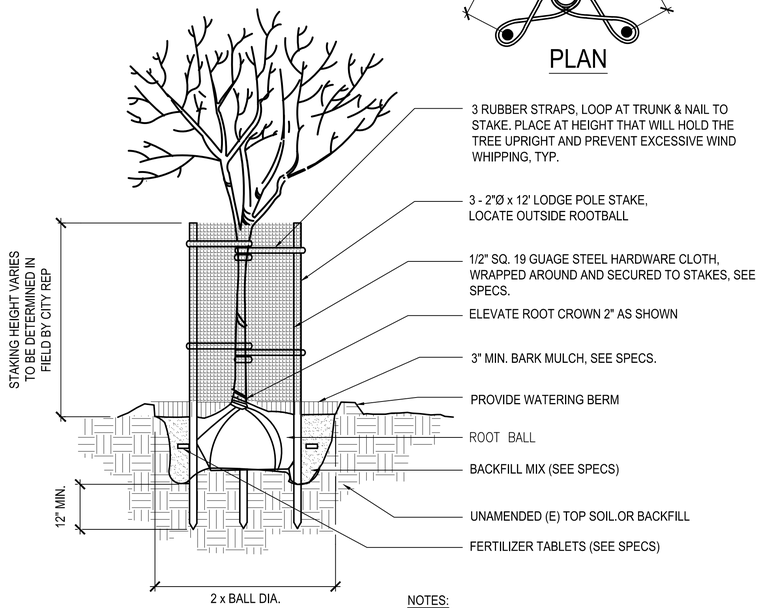

SECTION

NOTES:

1. SET BACKFILL MIX TO MIN. 80% COMPACTION BELOW ROOT BALL.
2. FINAL STAKING TO BE APPROVED BY CITY REP.
3. STAKES AND STRAPS TO BE PAINTED BLACK

TREE PLANTING & STAKING

NOT TO SCALE

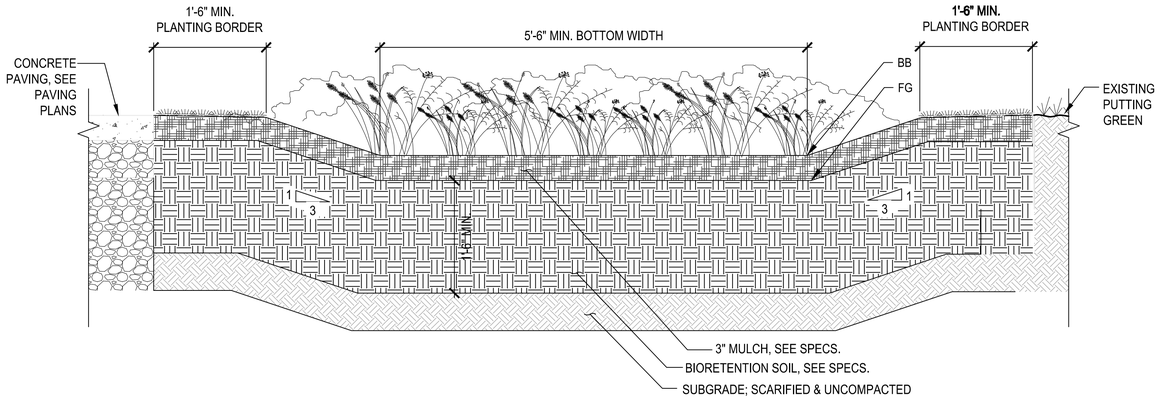

CONSTRUCTION NOTES:

1. AVOID COMPACTION OF EXISTING SUBGRADE BELOW PLANTER.
2. SCARIFY SUBGRADE TO A DEPTH OF 6 INCHES (MIN) IMMEDIATELY PRIOR TO PLACEMENT OF BIORETENTION SOIL.

GENERAL UTILITY NOTES:

1. EXISTING UTILITY LINES MUST BE SLEEVED AND MARKED WITH UTILITY MARKING TAPE OR RELOCATED. INCLUDE MEASURES TO PREVENT PREFERENTIAL FLOW INTO UTILITY TRENCHES (E.G., WATER STOP, TRENCH BLOCK, OR TRENCH COLLAR).
2. ABANDONED UTILITIES WITHIN FOOTPRINT OF FACILITY AND OBSERVED DURING CONSTRUCTION MUST BE REMOVED. COORDINATE WITH MUNICIPAL OR PRIVATE OWNER AND CITY REPRESENTATIVE.

(X) RAIN GARDEN

SCALE: N.T.S.

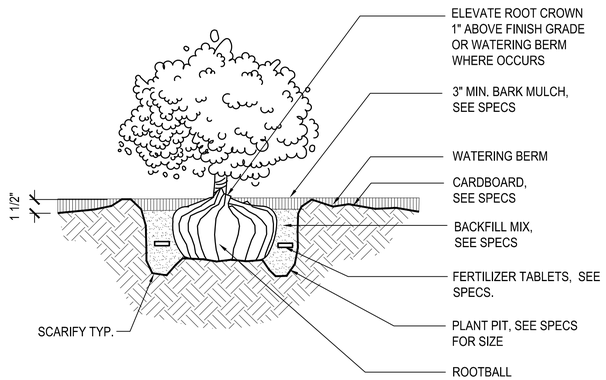

SHRUB PLANTING

NOT TO SCALE

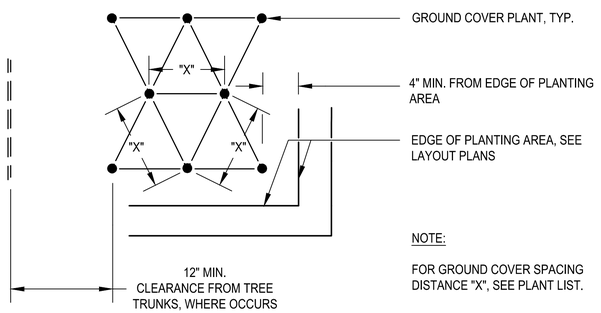

NOTE:

FOR GROUND COVER SPACING DISTANCE "X", SEE PLANT LIST.

GROUND COVER PLANTING

NOT TO SCALE

BUILDING DESIGN AND CONSTRUCTION DIVISION

BUREAU OF LANDSCAPE ARCHITECTURE

SAN FRANCISCO PUBLIC WORKS

Ron Alameda - City Architect

Jennifer Cooper - Bureau Manager

30 Van Ness Ave., Suite 3000, San Francisco, CA 94102
Fax (415)557-4701, Phone (415)557-4700

Project

Golden Gate Park Golf Clubhouse

970 47th Avenue
San Francisco, CA 94121

Consultant

Bureau Mgr.

Section Mgr.

95% CD SET 11/02/20

No.	Date	Revisions

Proj. L.Arch.	LH
Designed	LH
Drawn	VC
Checked	

NOT FOR CONSTRUCTION

Drawing Title

PLANTING DETAILS

Sheet No.

L5.1

Scale: AS NOTED

Project No.

1804

Original Sheet Size: 22"x34"

Drawing name: \\dpw.ci.sf.ca.us\boa\Data\Projects\PW-RPD-1804-GGP-Golf Course-Clubhouse\5.0_Design\5.01_Current\ACAD\Landscape\1804_L-6.0_CNST_DTLS.dwg Plotted on: Nov 02, 2020 - 4:54pm

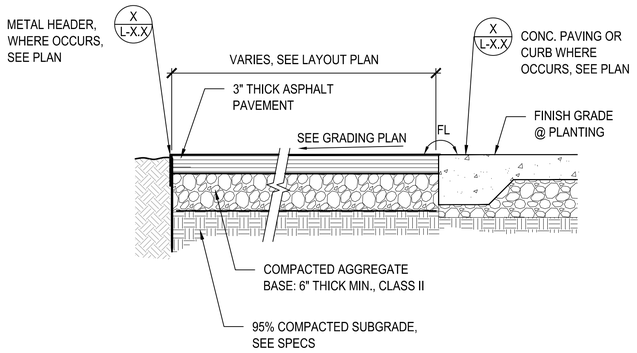

X ASPHALT PAVING

SCALE: 1" = 1'-0"

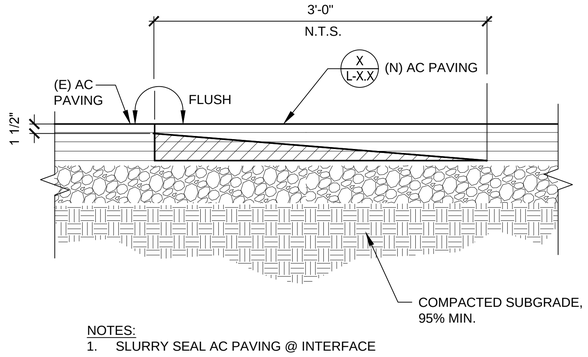

NOTES:
1. SLURRY SEAL AC PAVING @ INTERFACE

X (E) & (N) ASPHALT PAVING INTERFACE

SCALE: 1" = 1'-0"

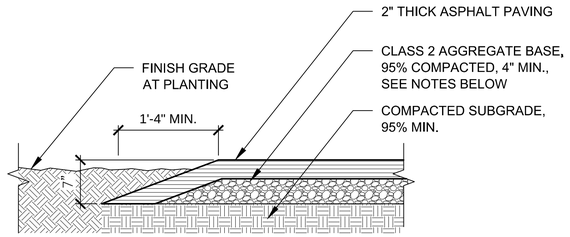

TAPERED EDGE AT MAINTENANCE ROAD

X ASPHALT PAVING TAPERED EDGE

SCALE: 1" = 1'-0"

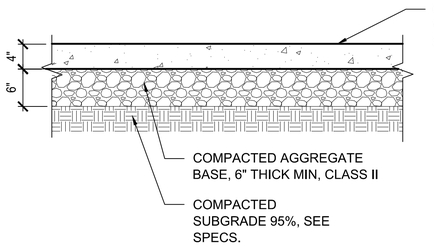

NOTES:
1. PLACE EXPANSION JOINTS WHERE PAVING ABUTS ALL VERTICAL SURFACES (X L-X.X)
2. PROVIDE A FIELD SAMPLE FOR MOCK UP, MIN. 3' SQUARE, TO BE APPROVED BY A CITY REPRESENTATIVE.

X CONCRETE PAVING

SCALE: 1" = 1'-0"

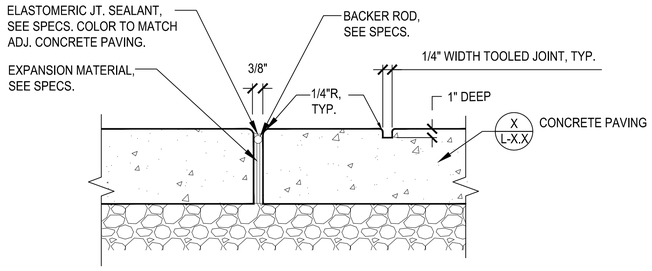

NOTES:
1. PLACE EXPANSION JOINTS WHERE PAVING ABUTS ALL VERTICAL SURFACES.

X EXPANSION & SCORE JOINTS

SCALE: N.T.S.

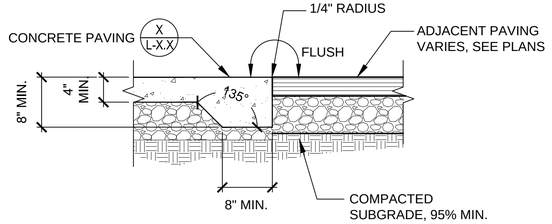

X THICKENED CONCRETE EDGE

SCALE: 1" = 1'-0"

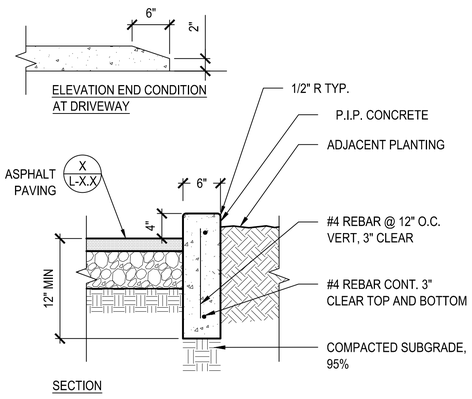

X CONCRETE CURB

SCALE: 1" = 1'-0"

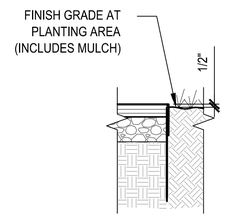

NOTES:
1. INSTALL METAL HEADER FLUSH WITH ASPHALT AT ALL CONDITIONS.
2. COMPACT BACKFILL AT EDGES.
3. BACKFILL ON BOTH SIDES OF EDGING DURING INSTALLATION LEAVING NO MORE THAN TWO SECTIONS UNSUPPORTED AT A TIME.
4. INSTALL STEEL EDGING WITH STAKE POCKETS FACING ASPHALT EDGE.
5. SECURE STEEL EDGING WITH 15" MANUFACTURED STEEL STAKES AT EVERY JOINT AND EQUALLY SPACE 5 PER 16' SHEET, SEE SPECS.
6. ALLOW FOR 3" MULCH AT FG OF PLANTING AREA.

X METAL HEADER

SCALE: 1" = 1'-0"

BUILDING DESIGN AND CONSTRUCTION DIVISION

BUREAU OF LANDSCAPE ARCHITECTURE

SAN FRANCISCO PUBLIC WORKS

Ron Alameda - City Architect

Jennifer Cooper - Bureau Manager

30 Van Ness Ave., Suite 3000, San Francisco, CA 94102
Fax (415)557-4701, Phone (415)557-4700

Project

Golden Gate Park Golf Clubhouse

970 47th Avenue
San Francisco, CA 94121

Consultant

Bureau Mgr.

Section Mgr.

95% CD SET 11/02/20

No.	Date	Revisions

Proj. L.Arch. LH
Designed LH
Drawn VC
Checked

NOT FOR CONSTRUCTION

Drawing Title

LANDSCAPE CONSTRUCTION DETAILS

Sheet No. L6.0

Scale: AS NOTED

Project No. 1804

Original Sheet Size: 22"x34"

Drawing name: \\dpw.ci.sf.ca.us\boa\Data\Projects\PW-RPD-1804-GGP-Golf Course-Clubhouse\5.0_Design\5.01_Current\ACAD\Landscape\1804_L-6.0_CNST_DTLS.dwg Plotted on: Nov 02, 2020 - 4:54pm

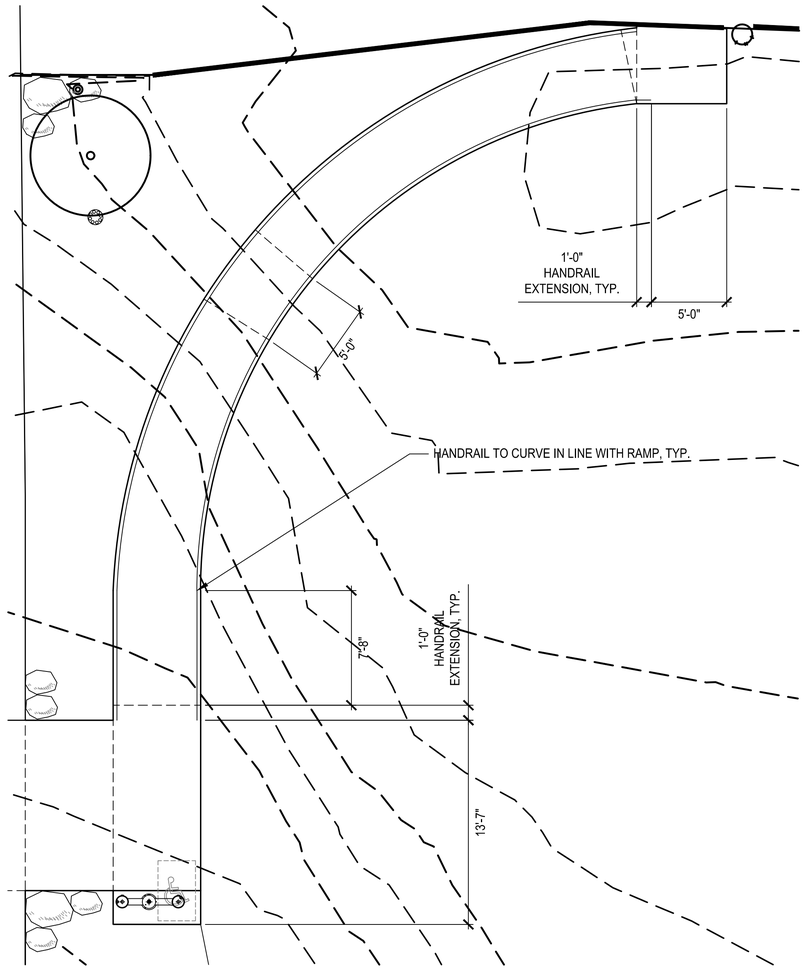

X RAMP AND HANDRAIL - PLAN

SCALE: 1" =5'-0"

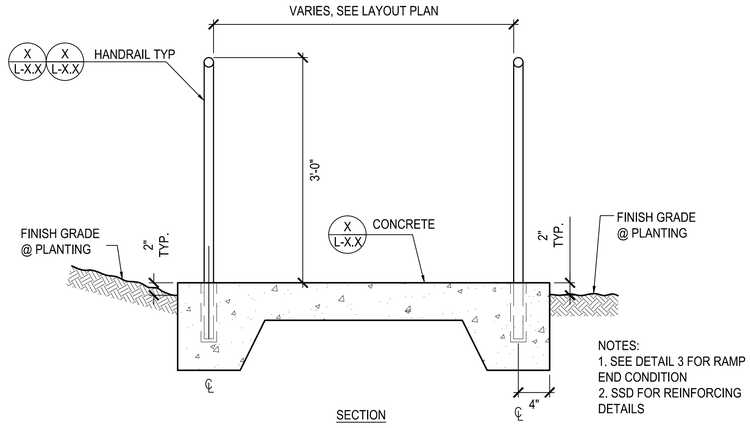

SECTION

NOTES:
1. SEE DETAIL 3 FOR RAMP END CONDITION
2. SSD FOR REINFORCING DETAILS

X RAMP AND HANDRAIL - SECTION

SCALE: 1" =1'-0"

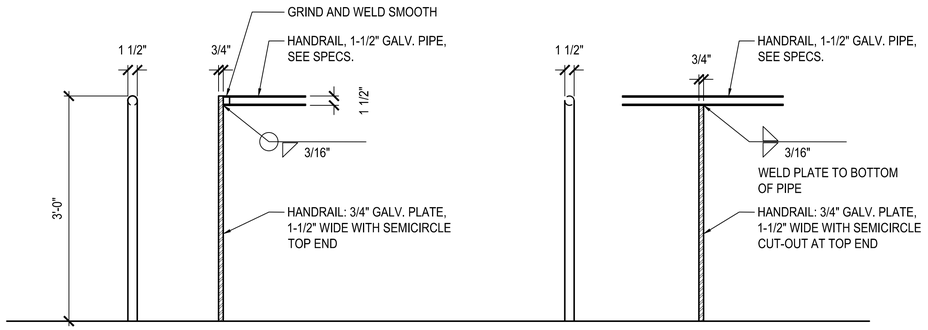

A-1. END ELEV. A-2. CROSS SECTION

A. END POST DETAIL

B. INTERMEDIATE POST DETAIL

NOTE:
1. SPACED EQUALLY. 5'-0" O.C. MAX SPAN
2. SUBMIT HANDRAILS SHOP DRAWINGS FOR CITY REPRESENTATIVE'S APPROVAL.

X HANDRAIL

SCALE: 1" =1'-0"

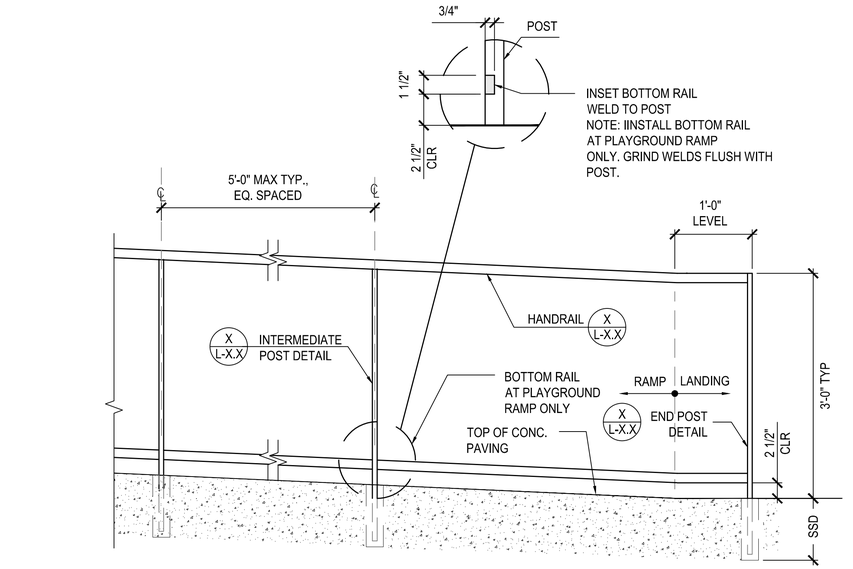

NOTE:

1. SUBMIT HANDRAILS SHOP DRAWINGS FOR CITY REPRESENTATIVE'S APPROVAL.

X RAMP RAIL END CONDITION

SCALE: 1" =1'-0"

BUILDING DESIGN AND CONSTRUCTION DIVISION

BUREAU OF LANDSCAPE ARCHITECTURE

SAN FRANCISCO PUBLIC WORKS

Ron Alameda - City Architect

Jennifer Cooper - Bureau Manager

30 Van Ness Ave., Suite 3000, San Francisco, CA 94102
Fax (415)557-4701, Phone (415)557-4700

Project

Golden Gate Park Golf Clubhouse

970 47th Avenue
San Francisco, CA 94121

Consultant

Bureau Mgr.

Section Mgr.

95% CD SET 11/02/20

No.	Date	Revisions

Proj. L.Arch.	LH
Designed	LH
Drawn	VC
Checked	

NOT FOR CONSTRUCTION

Drawing Title

LANDSCAPE
CONSTRUCTION DETAILS

Sheet No.

L6.1

Scale: AS NOTED

Project No.

1804

Drawing name: \\dpw.ci.sf.ca.us\boa\Data\Projects\PW-RPD-1804-GGP-Golf Course-Clubhouse\5.0_Design\5.01_Current\ACAD\Landscape\1804_L-6.0_CNST_DTLS.dwg Plotted on: Nov 02, 2020 - 4:54pm

Original Sheet Size: 22"x34"

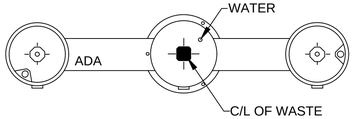

TOP VIEW

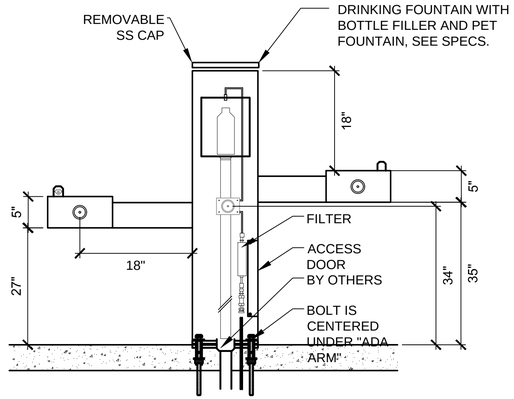

FRONT VIEW

NOTES:
1. SEE MECHANICAL DRAWINGS FOR WATER SUPPLY LINE AND DRAIN LINE CONNECTION
2. EXACT LOCATION OF DRINKING FOUNTAIN TO BE FIELD APPROVED BY CITY REPRESENTATIVE.
3. INSTALLATION TO BE COMPLETED IN ACCORDANCE WITH MANUFACTURER'S SPECIFICATIONS.

X SIGNAGE

SCALE: 1" = 1'-0"

X DRINKING FOUNTAIN

SCALE: 1" = 1'-0"

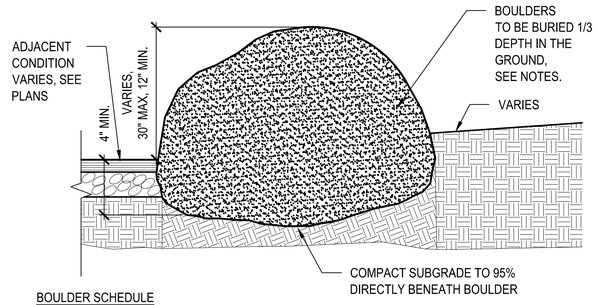

BOULDER SCHEDULE
REFER TO LAYOUT PLAN

SIZE	WIDTH AT GRADE	QUANTITY
A	2'X2' 9	
B	3'X3' 4	

NOTES:
1. CONTRACTOR TO PROVIDE PHOTOS OF ROCK TO PRIOR TO PURCHASE OR YARD LOCATION WITHIN 50 MILES.
2. ON SITE LAYOUT TO BE REVIEWED BY CITY REP AND LANDSCAPE ARCHITECT FOR FINAL LOCATION APPROVAL.
3. BOULDERS TO BE SONOMA FIELD STONE.

X BOULDER

SCALE: 1" = 1'-0"

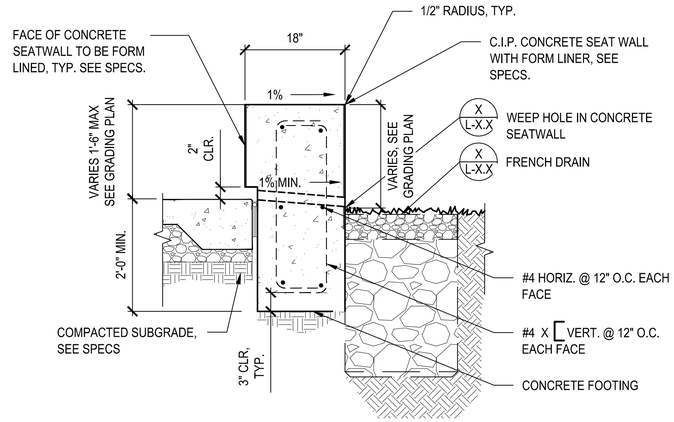

X CONCRETE WALL

SCALE: 1" = 1'-0"

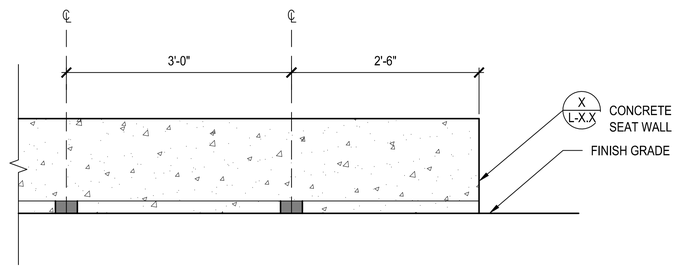

NOTES:
1. **EXACT LOCATION OF WEEP HOLES TO BE FIELD APPROVED BY CITY REPRESENTATIVE**

X WEEP HOLE IN CONCRETE SEATWALL ELEVATION

SCALE: 1" = 1'-0"

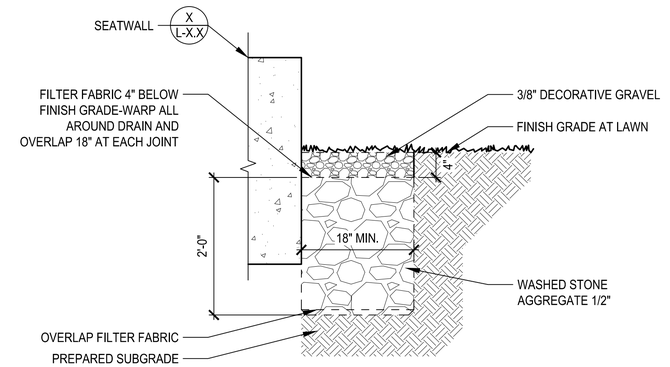

FRENCH DRAIN AT SEATWALL

FRENCH DRAIN AT PAVING - WITH METAL COVER

X FRENCH DRAIN

SCALE: 1" = 1'-0"

BUILDING DESIGN AND CONSTRUCTION DIVISION
BUREAU OF LANDSCAPE ARCHITECTURE
SAN FRANCISCO PUBLIC WORKS
Ron Alameda - City Architect
Jennifer Cooper - Bureau Manager
30 Van Ness Ave., Suite 3000, San Francisco, CA 94102
Fax (415)557-4701, Phone (415)557-4700

Project

Golden Gate Park Golf Clubhouse

970 47th Avenue
San Francisco, CA 94121

Consultant

Bureau Mgr.

Section Mgr.

95% CD SET 11/02/20

No.	Date	Revisions

Proj. L.Arch.	LH
Designed	LH
Drawn	VC
Checked	

NOT FOR CONSTRUCTION

Drawing Title

LANDSCAPE CONSTRUCTION DETAILS

Sheet No.

L-6.2

Scale: AS NOTED

Project No.

1804

Original Sheet Size: 22"x34"

Drawing name: \\dpw.ci.sf.ca.us\boa\Data\Projects\PW-RPD-1804-GGP-Golf Course-Clubhouse\5.0_Design\5.01_Current\ACAD\Landscape\1804_L-6.0_CNST_DTLS.dwg Plotted on: Nov 02, 2020 - 4:54pm

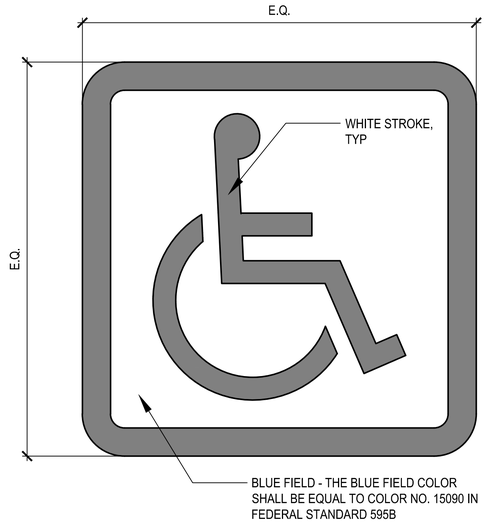

X INTERNATIONAL SYMBOL OF ACCESSIBILITY

SCALE: N.T.S.

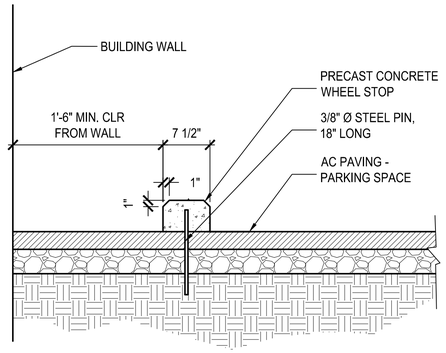

CROSS SECTION

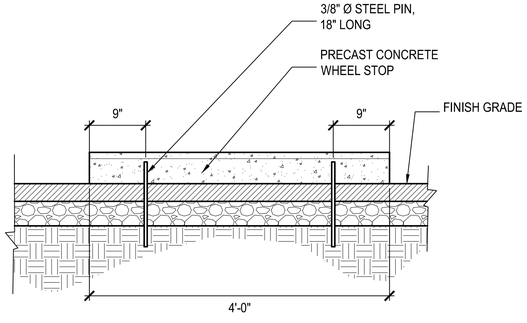

LONGITUDINAL ELEVATION

WHEEL STOP 1

SCALE: 1"=1'-0"

CAD FILE: WheelStop

X TYPICAL ACCESSIBLE PARKING STALL SIGN

SCALE: N.T.S.

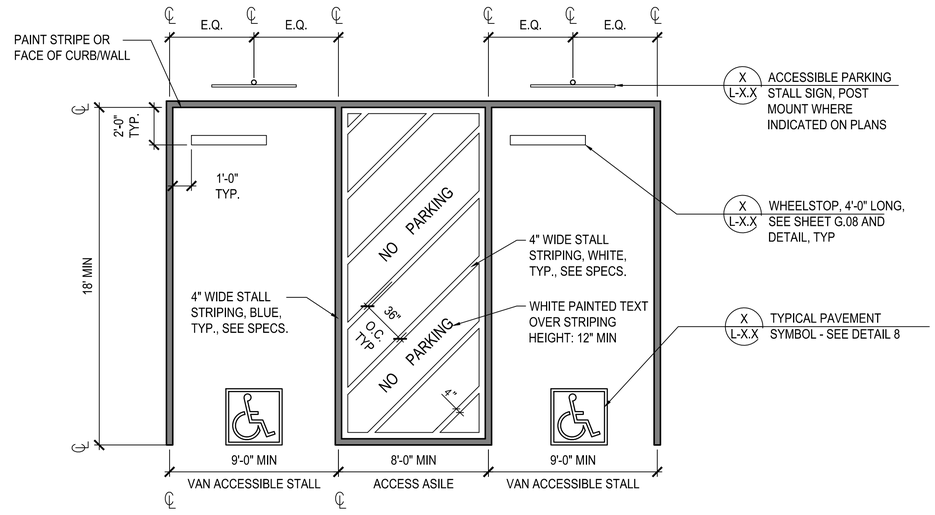

NOTE:
SLOPE SHALL NOT EXCEED 1:48 FOR PARKING AREAS AND ACCESS AISLES

X ACCESSIBLE PARKING

SCALE: N.T.S.

BUILDING DESIGN AND CONSTRUCTION DIVISION

BUREAU OF LANDSCAPE ARCHITECTURE

SAN FRANCISCO PUBLIC WORKS

Ron Alameda - City Architect

Jennifer Cooper - Bureau Manager

30 Van Ness Ave., Suite 3000, San Francisco, CA 94102
Fax (415)557-4701, Phone (415)557-4700

Project

Golden Gate Park Golf Clubhouse

970 47th Avenue
San Francisco, CA 94121

Consultant

Bureau Mgr.

Section Mgr.

95% CD SET 11/02/20

No.	Date	Revisions

Proj. L.Arch.	LH
Designed	LH
Drawn	VC
Checked	

NOT FOR CONSTRUCTION

Drawing Title

LANDSCAPE CONSTRUCTION DETAILS

Sheet No.

L-6.3

Scale: AS NOTED

Project No.

1804

Drawing name: \\dpw.ci.sf.ca.us\boa\Data\Projects\PW-RPD-1804-GGP-Golf Course-Clubhouse\5.0_Design\5.01_Current\ACAD\Landscape\1804_L-6.0_CNST_DTLS.dwg Plotted on: Nov 02, 2020 - 4:54pm

Original Sheet Size: 22"x34"

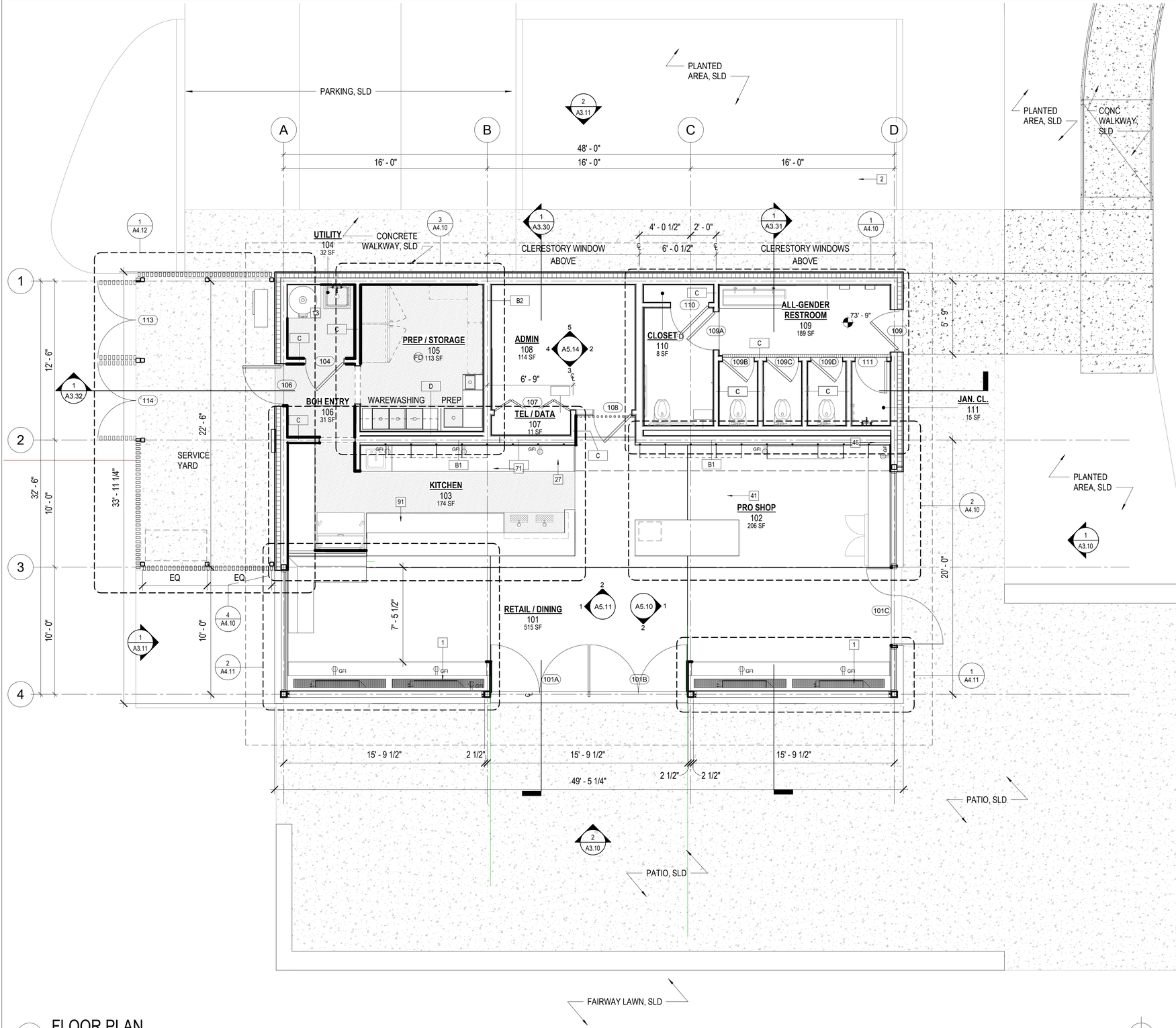

1 FLOOR PLAN
1/4" = 1'-0"

KEY NOTE LEGEND	
1	FLOOR STANDING VRF INDOOR UNITS SET IN WOOD CASEWORK
2	LINE OF ROOF ABOVE
27	QUARTZ COUNTER W/ WOOD BASE CABINETS
41	RETAIL ISLAND - QUARTZ COUNTER O/ CUSTOM WOOD BASE CABINETS, WATERFALL EDGE
46	QUARTZ COUNTERTOP O/ WOOD BASE W/ OPEN STORAGE SHELVING
71	QUARTZ COUNTERTOP, BAR HEIGHT
91	WALL-MOUNTED CANTILEVER QUARTZ COUNTERTOP

FLOOR FINISH LEGEND

RESINOUS EPOXY

POLISHED CONCRETE

BUREAU OF ARCHITECTURE

SAN FRANCISCO PUBLIC WORKS

Ron Alameida - City Architect

Julia Laue - Principal Architect / Bureau Manager

49 S Van Ness Ave., Suite 1100, San Francisco, CA 94103
Phone (628)271-2865

Golden Gate Park Golf Clubhouse

970 47th Avenue
San Francisco, CA 94121

Consultant

95% CD 11.16.2020

No.	Date	Revisions

PM Noah Levy
PA Paul DeFreitas
Drawn Author
Checked Checker

NOT FOR CONSTRUCTION

Drawing Title

FLOOR PLAN

Sheet No.

A2.10

Scale: As indicated

Project No.

1804

Original Sheet Size: 22"x34"

C:\Users\eharriso\Documents\1804_GGP_GC_CLUBHOUSE_R18_eharriso.rvt
11/2/2020 6:15:46 PM

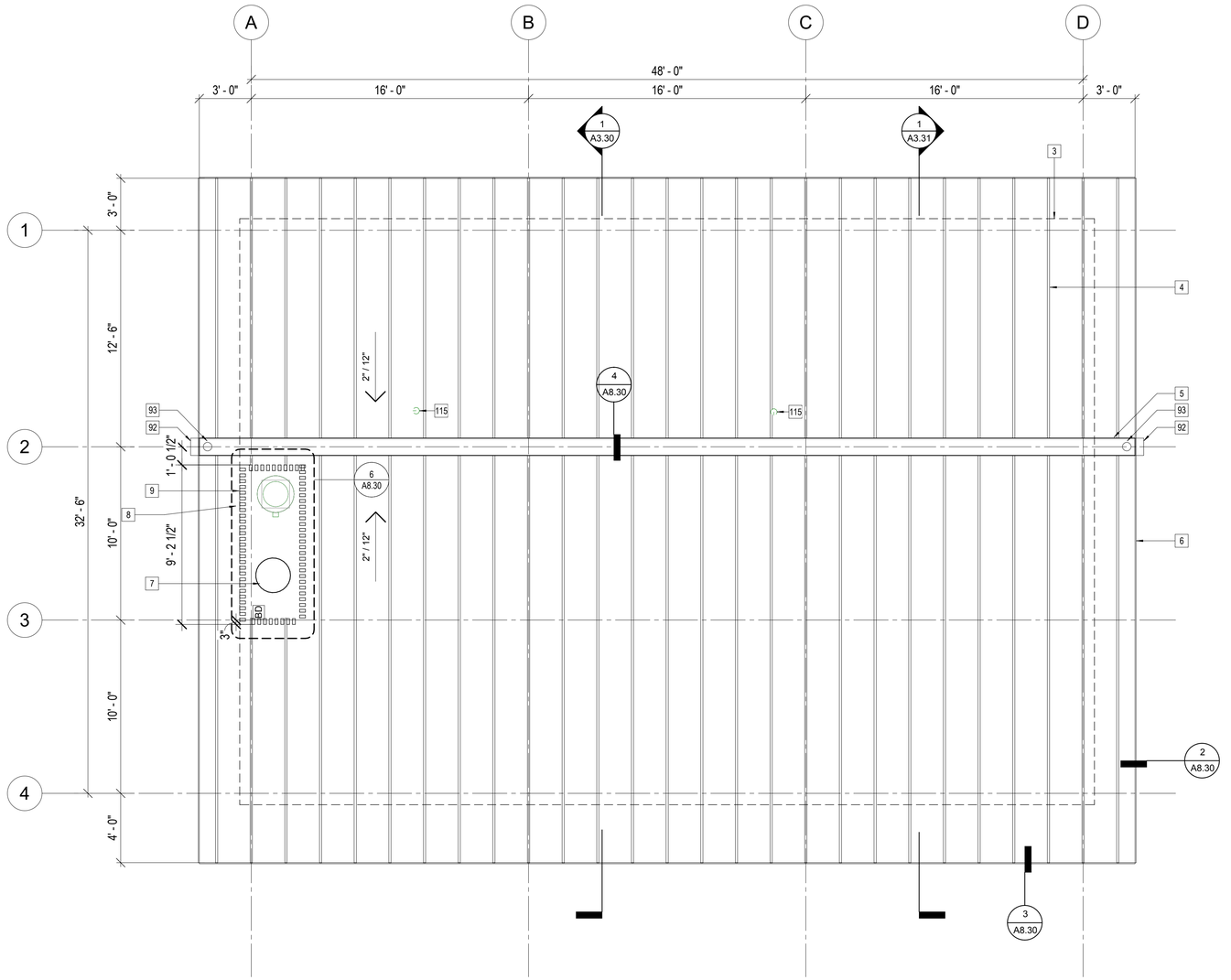

1 ROOF PLAN

1/4" = 1'-0"

KEY NOTE LEGEND

3	LINE OF BUILDING FOOTPRINT BELOW
4	STANDING SEAM MTL ROOF
5	ALUM BOX GUTTER W/ LEAF SCREEN
6	ALUM FASCIA CLADDING AT EAVES, TYP ALL SIDES
7	RANGE HOOD EXHAUST FAN ON CURB
8	GRAVITY RELIEF VENT ON CURB
9	SLATTED CEDAR ROOF SCREEN ENCLOSURE
92	GUTTER SCUPPERED OVERFLOW
93	CAST BRONZE GUTTER TO 3"Ø COPPER RWL TO BELOW
115	PLUMBING VENT, TYP X2, SPD

BUREAU OF ARCHITECTURE

SAN FRANCISCO PUBLIC WORKS

Ron Alameida - City Architect

Julia Laue - Principal Architect / Bureau Manager

49 S Van Ness Ave., Suite 1100, San Francisco, CA 94103
Phone (628)271-2865

Golden Gate Park Golf Clubhouse

970 47th Avenue
San Francisco, CA 94121

Consultant

95% CD 11.16.2020

No.	Date	Revisions

PM Noah Levy

PA Paul DeFreitas

Drawn Author

Checked Checker

NOT FOR CONSTRUCTION

Drawing Title

ROOF PLAN

Sheet No.

A2.20

Scale: 1/4" = 1'-0"

Project No.

1804

C:\Users\eharriso\Documents\1804_GGP_GC_CLUBHOUSE_R18_eharriso.rvt
11/2/2020 6:15:48 PM

Original Sheet Size: 22"x34"

KEY NOTE LEGEND	
87	FLOOR SINK
88	FLOOR TRENCH DRAIN
89	POWER/DATA FLOOR BOX
90	HSS COLUMN, TYP OF 4, SSD
116	EO TOPPING SLAB ABOVE

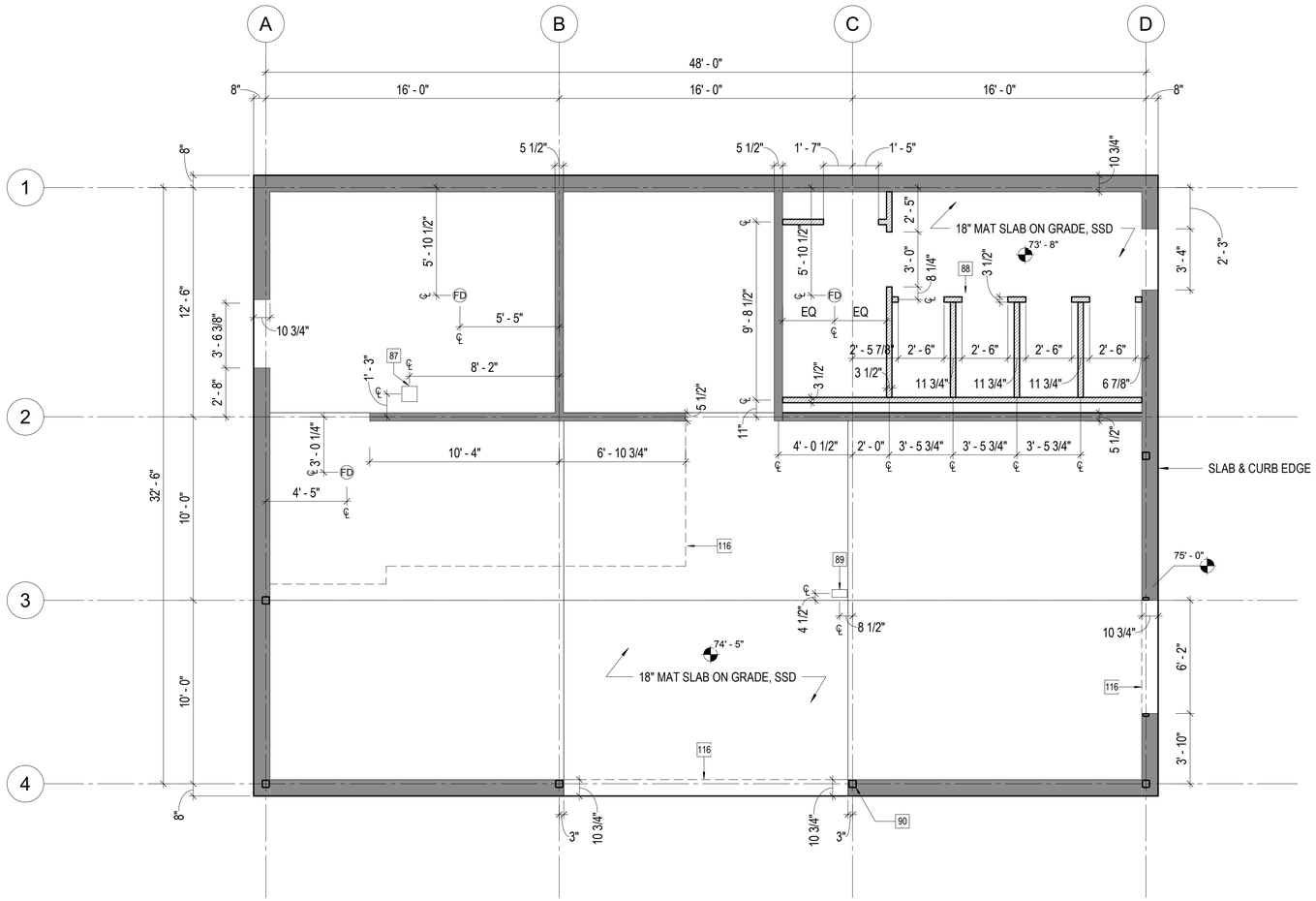

1 SLAB PLAN
1/4" = 1'-0"

SLAB PLAN LEGEND

CONCRETE CURB, ELEVATION @ +75' - 0"

3-1/2" WIDE CONCRETE CURB, ELEVATION @ +74' - 3"

BUREAU OF ARCHITECTURE

SAN FRANCISCO PUBLIC WORKS

Ron Alameida - City Architect

Julia Laue - Principal Architect / Bureau Manager

49 S Van Ness Ave., Suite 1100, San Francisco, CA 94103
Phone (628)271-2865

Golden Gate Park Golf Clubhouse

970 47th Avenue
San Francisco, CA 94121

Consultant

95% CD 11.16.2020

No.	Date	Revisions

PM Noah Levy
PA Paul DeFreitas
Drawn JL
Checked Checker

NOT FOR CONSTRUCTION

Drawing Title

SLAB PLAN

Sheet No. A2.30

Scale: As indicated

Project No. 1804

Original Sheet Size: 22"x34"

C:\Users\eharriso\Documents\1804_GGP_GC_CLUBHOUSE_R18_eharriso.rvt
11/2/2020 6:15:49 PM

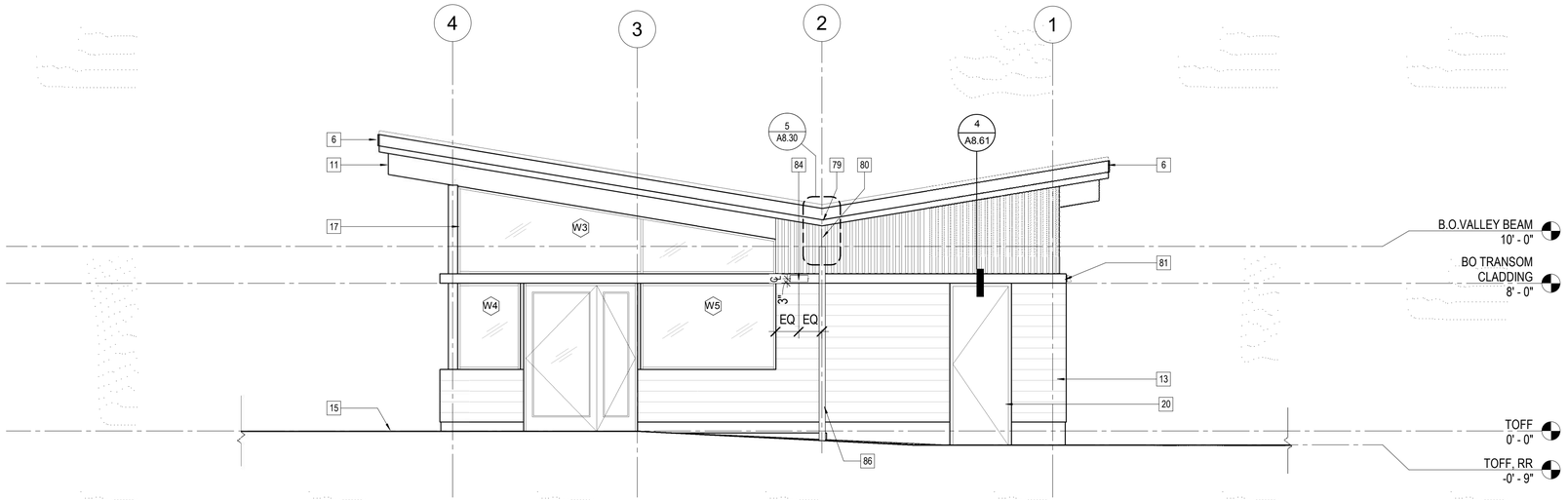

1 EXTERIOR ELEVATION - NORTH

1/4" = 1'-0"

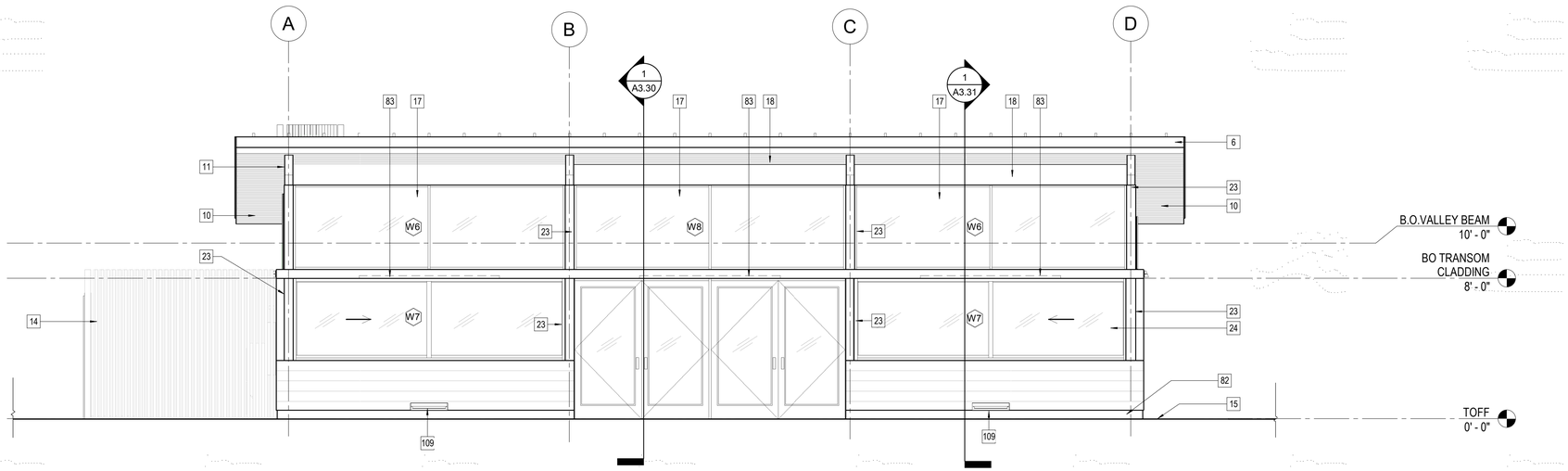

2 EXTERIOR ELEVATION - EAST

1/4" = 1'-0"

KEY NOTE LEGEND

6	ALUM FASCIA CLADDING AT EAVES, TYP ALL SIDES
10	EXPOSED CLT ROOF DECK, STAINED
11	EXPOSED GLULAM BEAM, STAINED, SSD
13	HORIZONTAL FIBER CEMENT RAINSCREEN CLADDING
14	SLATTED CEDAR FENCING ON STEEL POSTS
15	FINISH GRADE, SLDS
17	FIXED CLERESTORY WINDOW SYSTEM, SEE WINDOW SCHEDULE
18	EXPOSED GLUE-LAM BLOCKING BEAM
20	SECURITY GRADE HM DOOR W/ CONCEALED HM FRAME
23	ALUM CLAD COLUMNS
24	OPERABLE SLIDING WINDOWS, SEE WINDOW SCHEDULE
79	ALUM GUTTER SCUPPER OVERFLOW
80	ALUM GUTTER BOX FOR GUTTER DOWNSPOUT TRANSITION
81	ALUM CLADDING AT WALL TRANSITION
82	EXPOSED CONC CURB
83	RECESSED LINEAR LED LIGHT IN TRANSOM CLADDING
84	EXT WALL MOUNTED FLOOD LIGHT
86	ALUM CLADDING OVER RWL PIPING
109	RECESSED IN-WALL LIGHT

BUREAU OF ARCHITECTURE

SAN FRANCISCO PUBLIC WORKS

Ron Alameida - City Architect

Julia Laue - Principal Architect / Bureau Manager

49 S Van Ness Ave., Suite 1100, San Francisco, CA 94103
Phone (628)271-2865

Golden Gate Park Golf Clubhouse

970 47th Avenue
San Francisco, CA 94121

Consultant

95% CD 11.16.2020

No.	Date	Revisions

PM Noah Levy

PA Paul DeFreitas

Drawn Author

Checked Checker

NOT FOR CONSTRUCTION

Drawing Title

EXTERIOR BUILDING ELEVATIONS_NORTH & EAST

Sheet No. A3.10

Scale: 1/4" = 1'-0"

Project No. 1804

Original Sheet Size: 22"x34"

C:\Users\eharriso\Documents\1804_GGP_GC_CLUBHOUSE_R18_eharriso.rvt
11/2/2020 6:15:56 PM

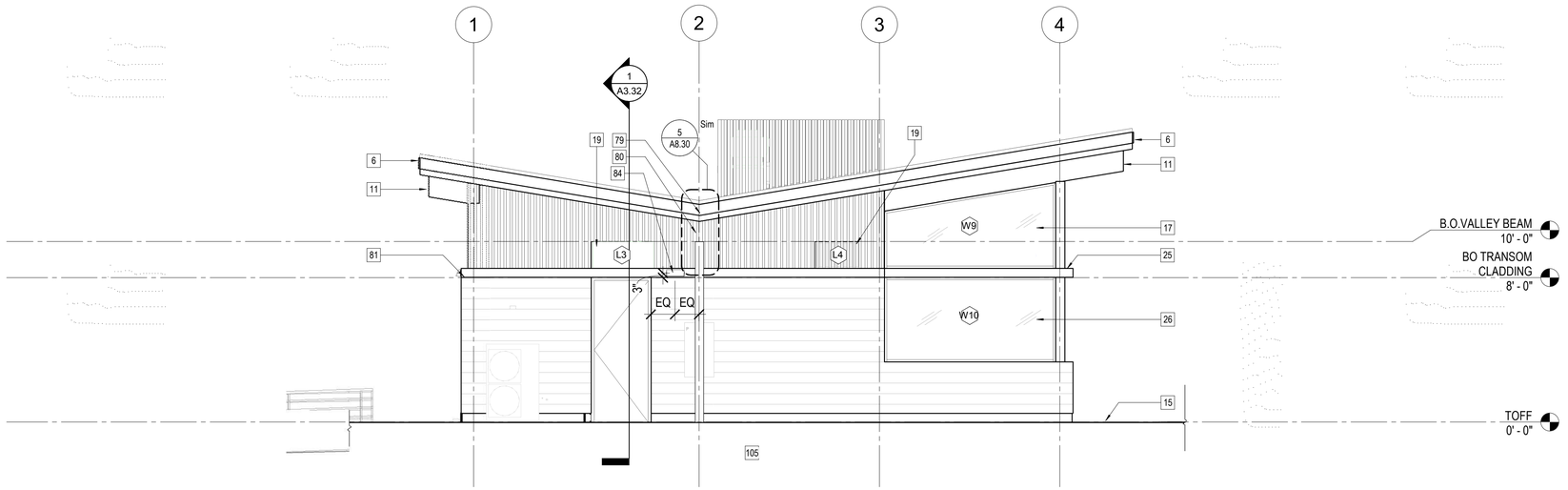

1 EXTERIOR ELEVATION - SOUTH

1/4" = 1'-0"

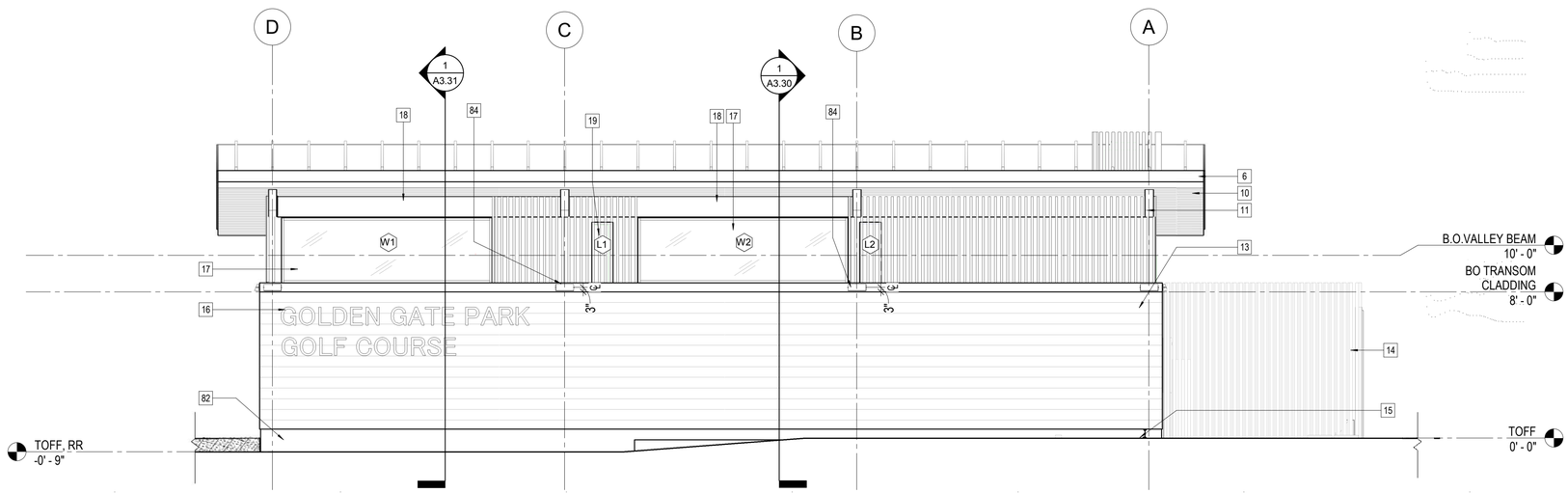

2 EXTERIOR ELEVATION - WEST

1/4" = 1'-0"

KEY NOTE LEGEND

6	ALUM FASCIA CLADDING AT EAVES, TYP ALL SIDES
10	EXPOSED CLT ROOF DECK, STAINED
11	EXPOSED GLULAM BEAM, STAINED, SSD
13	HORIZONTAL FIBER CEMENT RAINSCREEN CLADDING
14	SLATTED CEDAR FENCING ON STEEL POSTS
15	FINISH GRADE, SLDS
16	SS LETTERING
17	FIXED CLERESTORY WINDOW SYSTEM, SEE WINDOW SCHEDULE
18	EXPOSED GLUE-LAM BLOCKING BEAM
19	LOUVER BEHIND SLATTING, SEE WINDOW SCHEDULE AND SMD
25	ALUM CLADDING AT TRANSOM BEAM
26	FIXED WINDOW SYSTEM, SEE WINDOW SCHEDULE
79	ALUM GUTTER SCUPPER OVERFLOW
80	ALUM CLAD BOX FOR GUTTER DOWNSPOUT TRANSITION
81	ALUM CLADDING AT WALL TRANSITION
82	EXPOSED CONC CURB
84	EXT WALL MOUNTED FLOOD LIGHT

BUREAU OF ARCHITECTURE

SAN FRANCISCO PUBLIC WORKS

Ron Alameida - City Architect

Julia Laue - Principal Architect / Bureau Manager

49 S Van Ness Ave., Suite 1100, San Francisco, CA 94103
Phone (628)271-2865

Golden Gate Park Golf Clubhouse

970 47th Avenue
San Francisco, CA 94121

Consultant

95% CD 11.16.2020

No.	Date	Revisions

PM Noah Levy

PA Paul DeFreitas

Drawn Author

Checked Checker

NOT FOR CONSTRUCTION

Drawing Title

EXTERIOR BUILDING ELEVATIONS_SOUTH & WEST

Sheet No.

A3.11

Scale: 1/4" = 1'-0"

Project No.

1804

Original Sheet Size: 22"x34"

C:\Users\eharrison\Documents\1804_GGP_GC_CLUBHOUSE_R18_eharriso.rvt
11/2/2020 6:16:05 PM

KEY NOTE LEGEND	
6	ALUM FASCIA CLADDING AT EAVES, TYP ALL SIDES
11	EXPOSED GLULAM BEAM, STAINED, SSD
17	FIXED CLERESTORY WINDOW SYSTEM, SEE WINDOW SCHEDULE
26	FIXED WINDOW SYSTEM, SEE WINDOW SCHEDULE
54	SS HANDWASH SINK W/ SIDE SPLASH GUARDS, DROP INTO COUNTERTOP
67	GLASS SNEEZE GUARD ON COUNTER
70	FIN FLOOR, SEE ROOM FINISH SCHEDULE
71	QUARTZ COUNTERTOP, BAR HEIGHT
72	GLULAM BEAM SHAPED AT EAVE
73	PATIO PAVING, SLD
74	PATIO DOORS, SEE DOOR SCHEDULE
75	HSS SPANDREL BEAM, MTL CLAD, SSD
76	STANDING SEAM ALUM ROOF
78	WOOD SLAT CLAD BULKHEAD @ HOOD
96	BUILT-IN WOOD BANQUETTE
106	TILE CLAD WALL, BEYOND

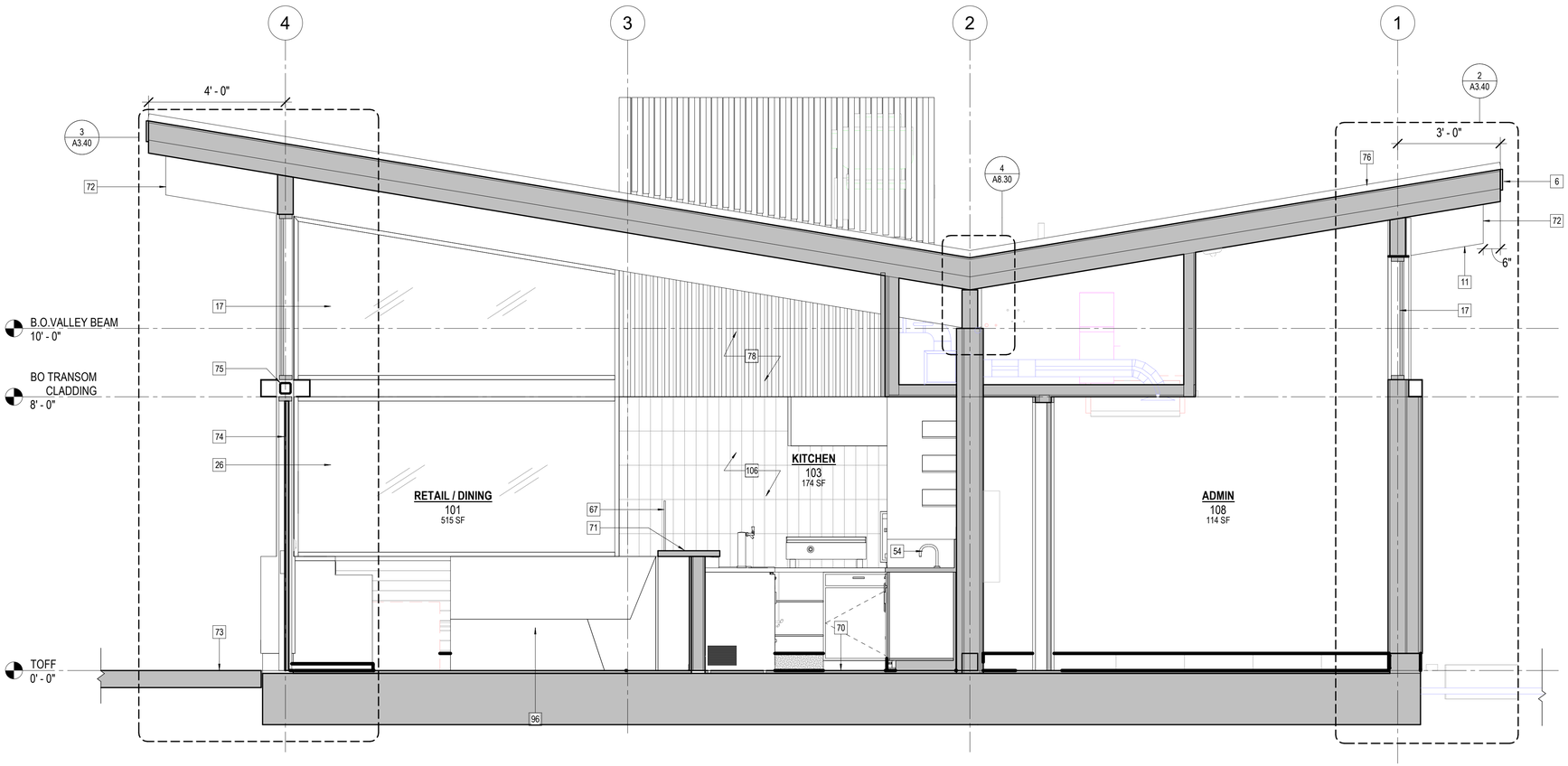

1 BUILDING SECTION - THROUGH ADMIN
1/2" = 1'-0"

BUREAU OF ARCHITECTURE

SAN FRANCISCO PUBLIC WORKS

Ron Alameida - City Architect

Julia Laue - Principal Architect / Bureau Manager

49 S Van Ness Ave., Suite 1100, San Francisco, CA 94103
Phone (628)271-2865

Golden Gate Park Golf Clubhouse

970 47th Avenue
San Francisco, CA 94121

Consultant

95% CD 11.16.2020

No.	Date	Revisions

PM Noah Levy
PA Paul DeFreitas
Drawn Author
Checked Checker

NOT FOR CONSTRUCTION

Drawing Title

BUILDING SECTIONS

Sheet No. A3.30

Scale: 1/2" = 1'-0"

Project No. 1804

Original Sheet Size: 22"x34"

C:\Users\eharriso\Documents\1804_GGP_GC_CLUBHOUSE_R18_eharriso.rvt
11/2/2020 6:16:09 PM

KEY NOTE LEGEND	
1	FLOOR STANDING VRF INDOOR UNITS SET IN WOOD CASEWORK
11	EXPOSED GLULAM BEAM, STAINED, SSD
15	FINISH GRADE, SLDS
16	SS LETTERING
17	FIXED CLERESTORY WINDOW SYSTEM, SEE WINDOW SCHEDULE
24	OPERABLE SLIDING WINDOWS, SEE WINDOW SCHEDULE
34	WALL MOUNTED WATER CLOSET
40	WALL MOUNT SHELVING SYS
66	COMPOSITE SINK & COUNTERTOP
69	SUSPENDED GYP BD CLG
73	PATIO PAVING, SLD
75	HSS SPANDREL BEAM, MTL CLAD, SSD
76	STANDING SEAM ALUM ROOF
94	UNDERCOUNTER BEVERAGE REFRIGERATOR
107	WOOD SLAT CLAD BULKHEAD

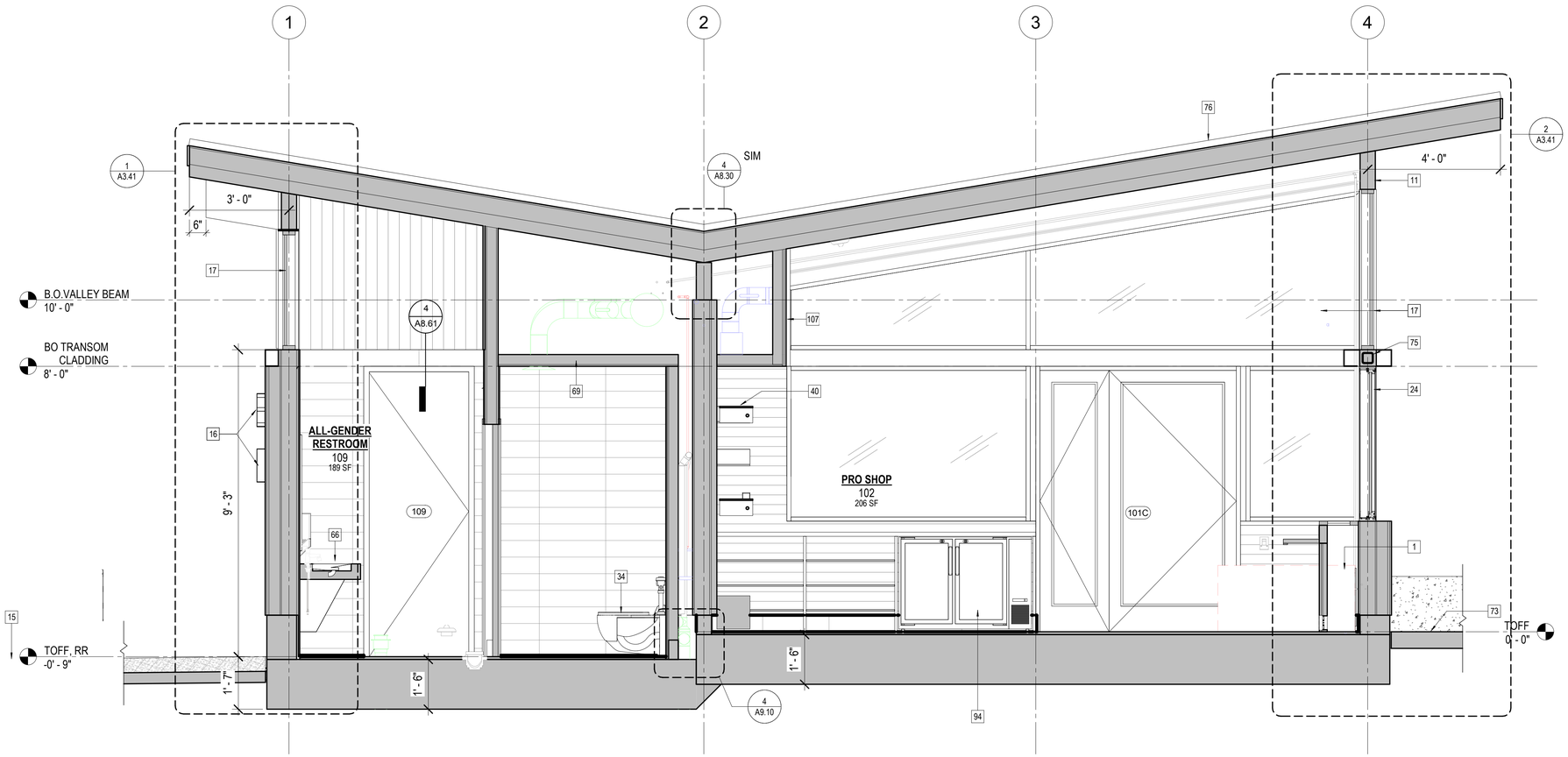

1 BUILDING SECTION - THROUGH RESTROOM
1/2" = 1'-0"

BUREAU OF ARCHITECTURE

SAN FRANCISCO PUBLIC WORKS

Ron Alameida - City Architect

Julia Laue - Principal Architect / Bureau Manager

49 S Van Ness Ave., Suite 1100, San Francisco, CA 94103
Phone (628)271-2865

Golden Gate Park Golf Clubhouse

970 47th Avenue
San Francisco, CA 94121

Consultant

95% CD 11.16.2020

No.	Date	Revisions

PM Noah Levy
PA Paul DeFreitas
Drawn Author
Checked Checker

NOT FOR CONSTRUCTION

Drawing Title

BUILDING SECTIONS

Sheet No. A3.31

Scale: 1/2" = 1'-0"

Project No. 1804

Original Sheet Size: 22"x34"

C:\Users\eharriso\Documents\1804_GGP_GC_CLUBHOUSE_R18_eharriso.rvt
11/2/2020 6:16:12 PM

KEY NOTE LEGEND	
110	EXHAUST LOUVER
111	CLEANABLE ACT TILE CEILING

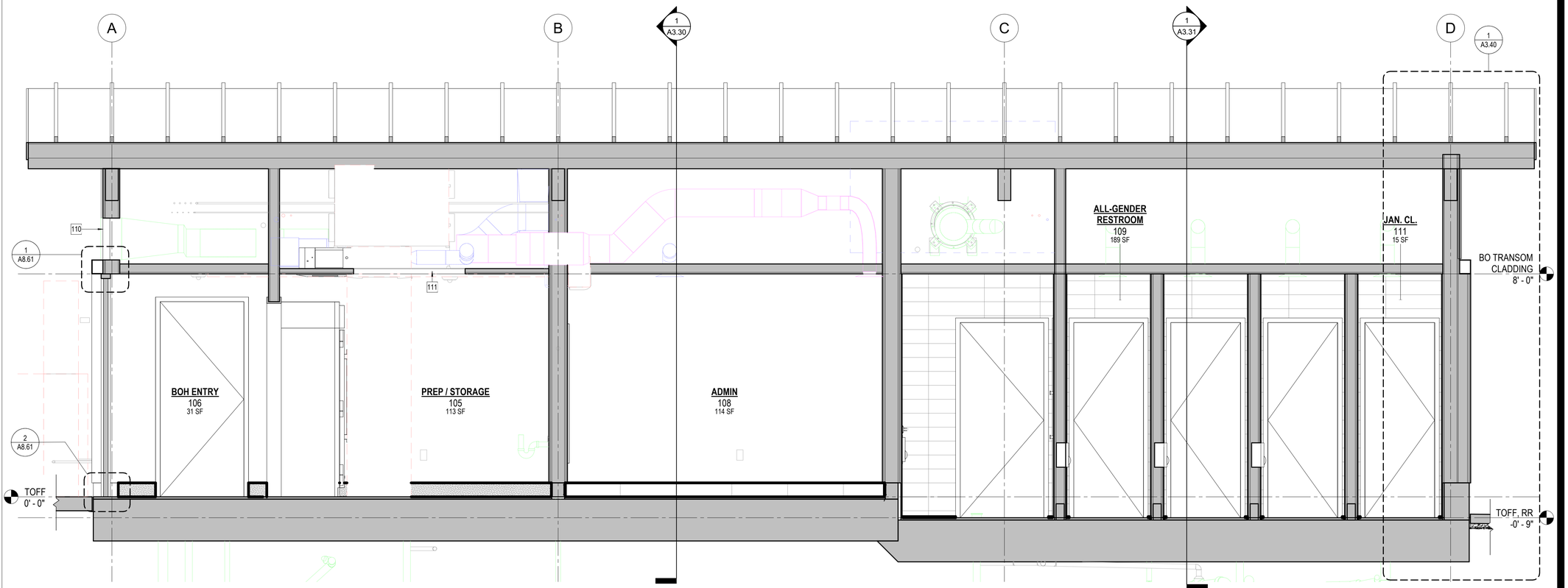

1 LONGITUDINAL BUILDING SECTION - THROUGH ADMIN

1/2" = 1'-0"

C:\Users\eharriso\Documents\1804_GGP_GC_CLUBHOUSE_R18_eharriso.rvt
11/2/2020 6:16:15 PM

Original Sheet Size: 22"x34"

BUREAU OF ARCHITECTURE

SAN FRANCISCO PUBLIC WORKS

Ron Alameida - City Architect

Julia Laue - Principal Architect / Bureau Manager

49 S Van Ness Ave., Suite 1100, San Francisco, CA 94103
Phone (628)271-2865

Golden Gate Park Golf Clubhouse

970 47th Avenue
San Francisco, CA 94121

Consultant

95% CD 11.16.2020

No.	Date	Revisions

PM Noah Levy
PA Paul DeFreitas
Drawn Author
Checked Checker

NOT FOR CONSTRUCTION

Drawing Title

BUILDING SECTIONS

Sheet No.

A3.32

Scale: 1/2" = 1'-0"

Project No.

1804

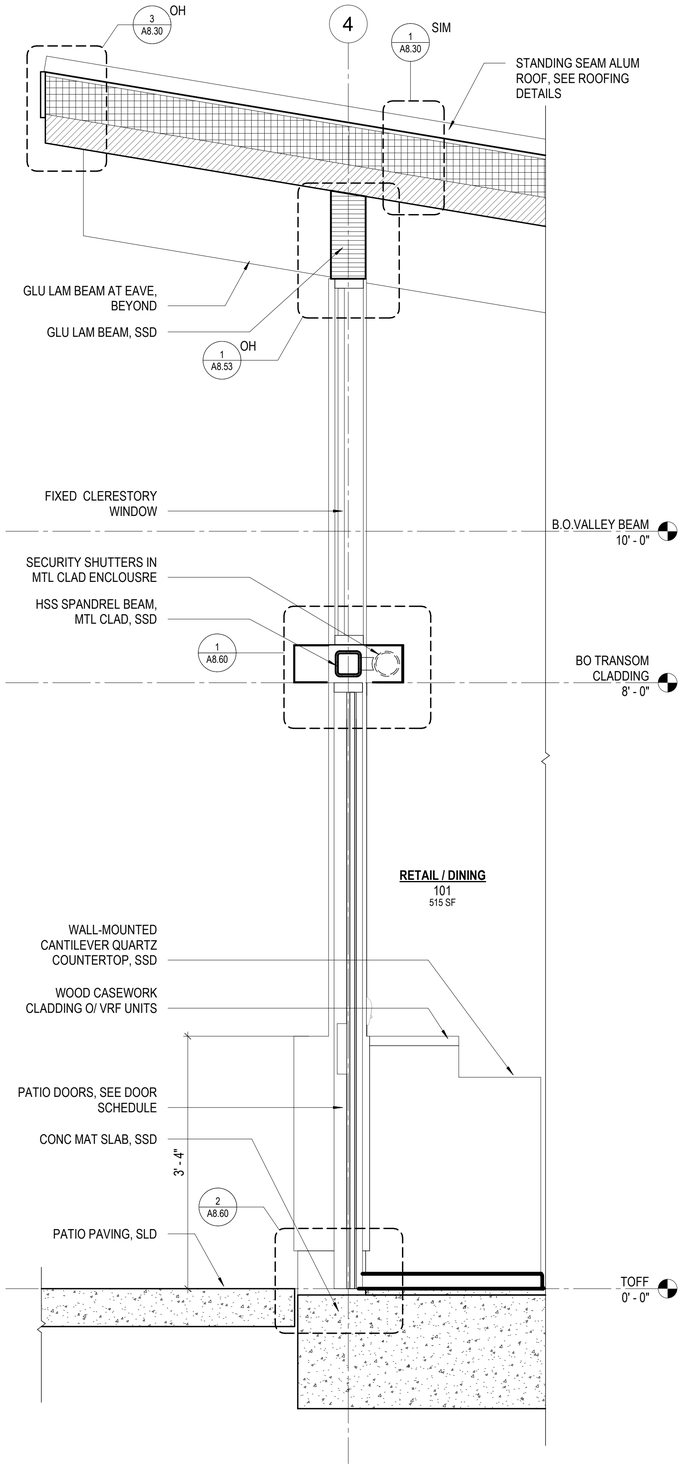

3 WALL SECTION - EAST AT RETAIL/DINING
1" = 1'-0"

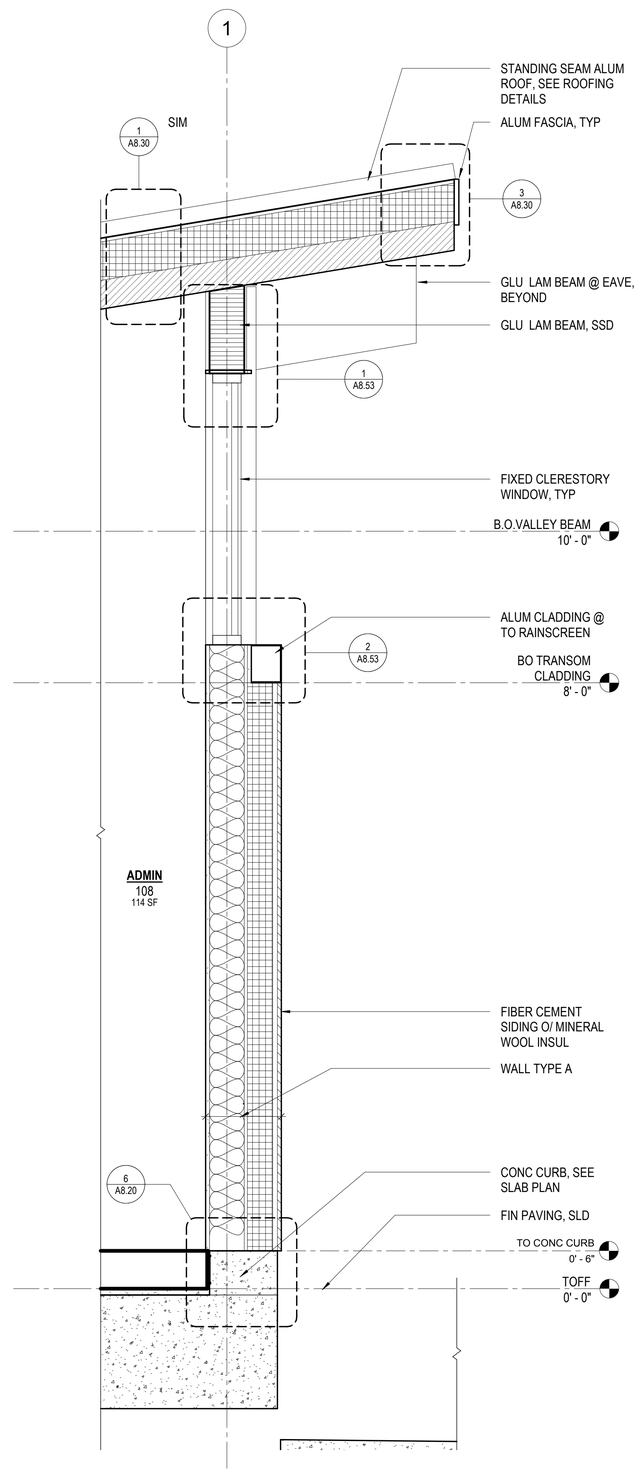

2 WALL SECTION - WEST AT ADMIN
1" = 1'-0"

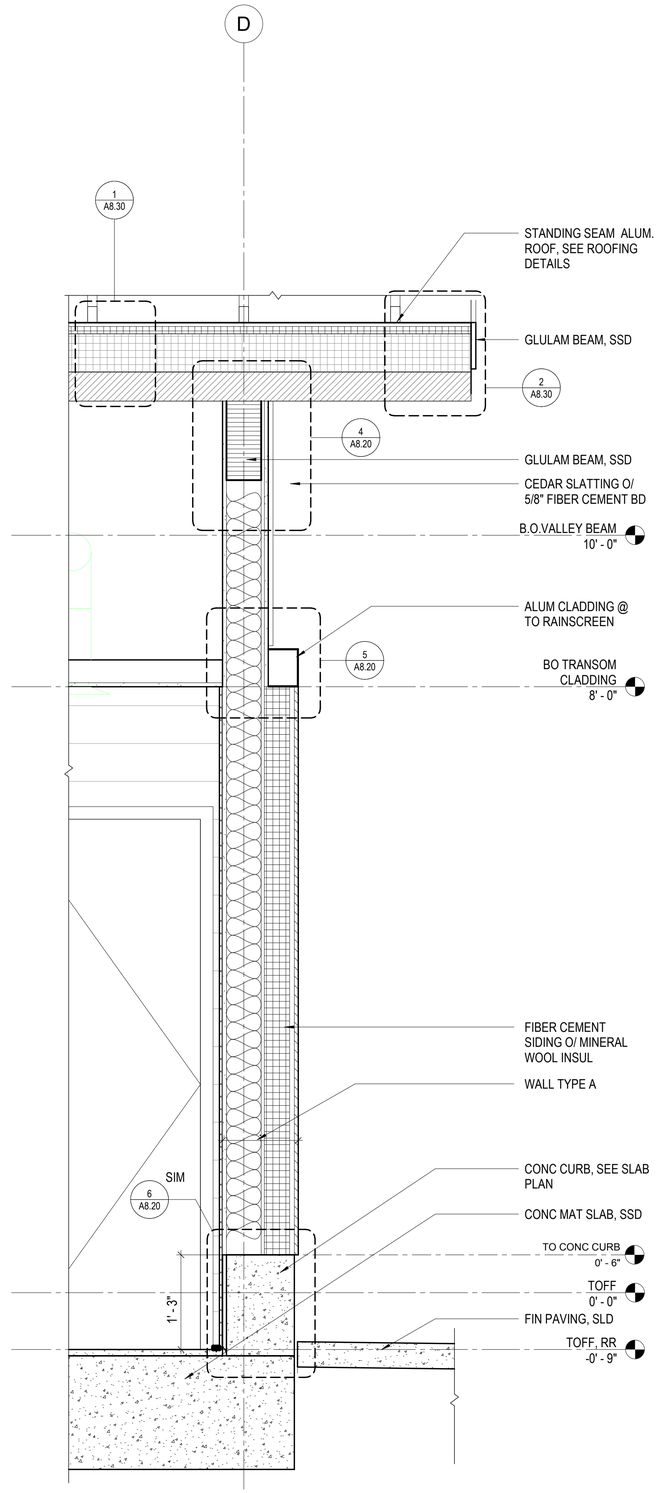

1 WALL SECTION - NORTH
1" = 1'-0"

C:\Users\eharriso\Documents\1804_GGP_GC_CLUBHOUSE_R18_eharriso.rvt
11/2/2020 6:16:16 PM

Original Sheet Size: 22"x34"

BUREAU OF ARCHITECTURE

SAN FRANCISCO PUBLIC WORKS

Ron Alameida - City Architect

Julia Laue - Principal Architect / Bureau Manager

49 S Van Ness Ave., Suite 1100, San Francisco, CA 94103
Phone (628)271-2865

Golden Gate Park Golf Clubhouse

970 47th Avenue
San Francisco, CA 94121

Consultant

95% CD 11.16.2020

No.	Date	Revisions

PM Noah Levy
PA Paul DeFreitas
Drawn Author
Checked Checker

NOT FOR CONSTRUCTION

Drawing Title

WALL SECTIONS

Sheet No.

A3.40

Scale: 1" = 1'-0"

Project No.

1804

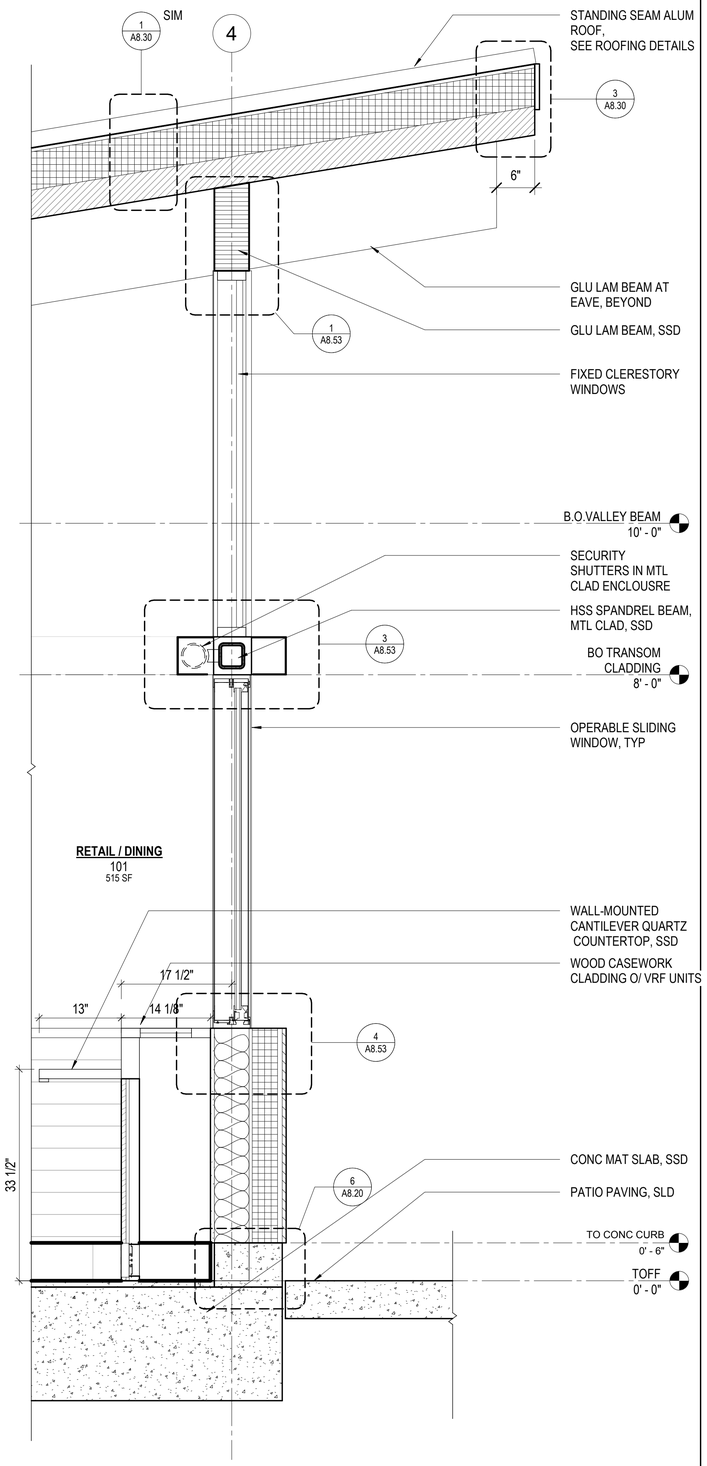

2 WALL SECTION - EAST AT PRO SHOP
1" = 1'-0"

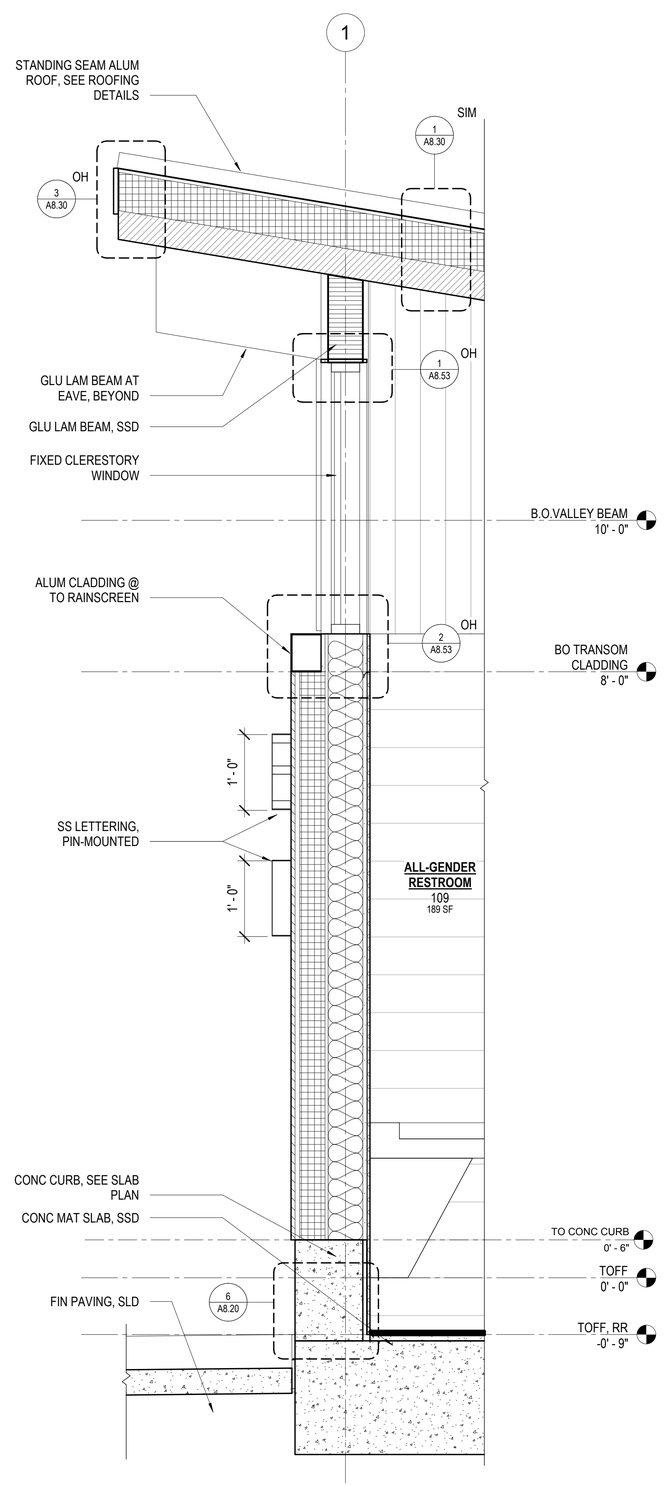

1 WALL SECTION - WEST AT ALL-GENDER RESTROOM
1" = 1'-0"

BUREAU OF ARCHITECTURE

SAN FRANCISCO PUBLIC WORKS

Ron Alameida - City Architect

Julia Laue - Principal Architect / Bureau Manager

49 S Van Ness Ave., Suite 1100, San Francisco, CA 94103
Phone (628)271-2865

Golden Gate Park Golf Clubhouse

970 47th Avenue
San Francisco, CA 94121

Consultant

95% CD 11.16.2020

No.	Date	Revisions

PM Noah Levy
PA Paul DeFreitas
Drawn Author
Checked Checker

NOT FOR CONSTRUCTION

Drawing Title

WALL SECTIONS

Sheet No.

A3.41

Scale: 1" = 1'-0"

Project No.

1804

Original Sheet Size: 22"x34"

C:\Users\eharriso\Documents\1804_GGP_GC_CLUBHOUSE_R18_eharriso.rvt
11/2/2020 6:16:18 PM

KEY NOTE LEGEND

28	MIRROR, SEE SHEET G3.32
29	FLOOR DRAIN
30	48" GRAB BAR, SEE SHEET G3.32
31	42" GRAB BAR, SEE SHEET G3.32
32	TOILET TISSUE DISPENSER, SEE SHEET G3.32
33	SANITARY NAPKIN DISPOSAL, SEE SHEET G3.32
34	WALL MOUNTED WATER CLOSET
35	WALL-MOUNTED ADA WATER CLOSET, SEE SHEET G3.32
36	TOILET SEAT COVER DISPENSER, SEE SHEET G3.32
37	COAT HOOK, SEE SHEET G3.32
39	MOP RACK
41	RETAIL ISLAND - QUARTZ COUNTER O/ CUSTOM WOOD BASE CABINETS, WATERFALL EDGE
42	POS SYSTEM, NIC
44	TWO KEG REFRIGERATOR, UNDERCOUNTER
45	TWO TAP HANDLE FOR KEG - MOUNT IN COUNTERTOP
48	EPOXY FLOOR & COVE BASE, TYP IN KITCHEN, PREP/STORAGE/BOH ENTRY & UTILITY
49	REFRIGERATED SANDWICH PREP STATION
52	COUNTERTOP OVEN, NIC
53	GRIDDLE/FLAT TOP, NIC
54	SS HANDWASH SINK W/ SIDE SPLASH GUARDS, DROP INTO COUNTERTOP
56	METRO WIRE SHELVING RACKS OR SIM, 5 TIER, BOLT TO WALL
57	SS PREP SINK W/ INTERGRAL DRAINBOARD AND BACK SPLASH
58	SS 3 COMPARTMENT WAREWASHING SINK W/ 2 INTEGRAL DRAINBOARDS AND BACKSPLASH
59	COMMERCIAL REFRIGERATOR, NIC
60	COMMERICAL FREEZER, NIC
63	HAND DRYER
65	QUARTZ COUNTERTOP
66	COMPOSITE SINK & COUNTERTOP
67	GLASS SNEEZE GUARD ON COUNTER
71	QUARTZ COUNTERTOP, BAR HEIGHT
94	UNDERCOUNTER BEVERAGE REFRIGERATOR
96	BUILT-IN WOOD BANQUETTE
104	NON-FIXED METRO WIRE SHELVING RACK, 2 TIER

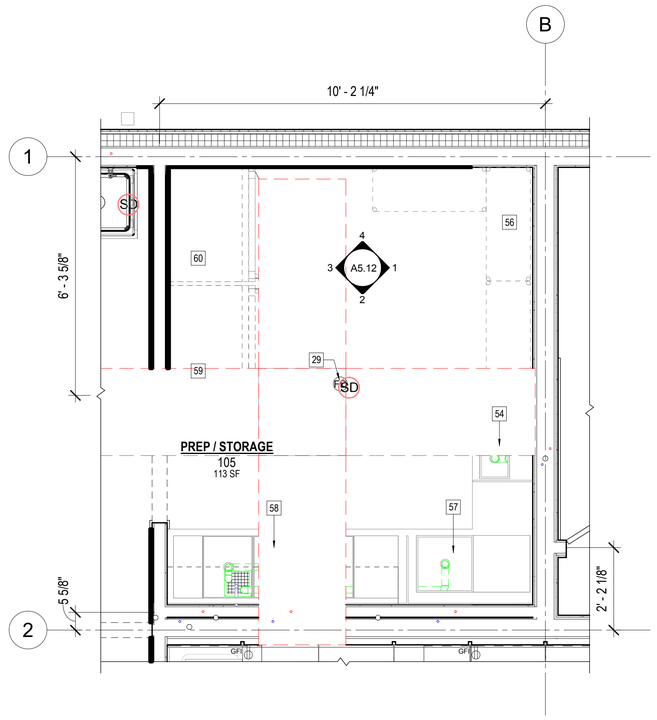

3 ENLARGED FLOOR PLAN - QUADRANT D
1/2" = 1'-0"

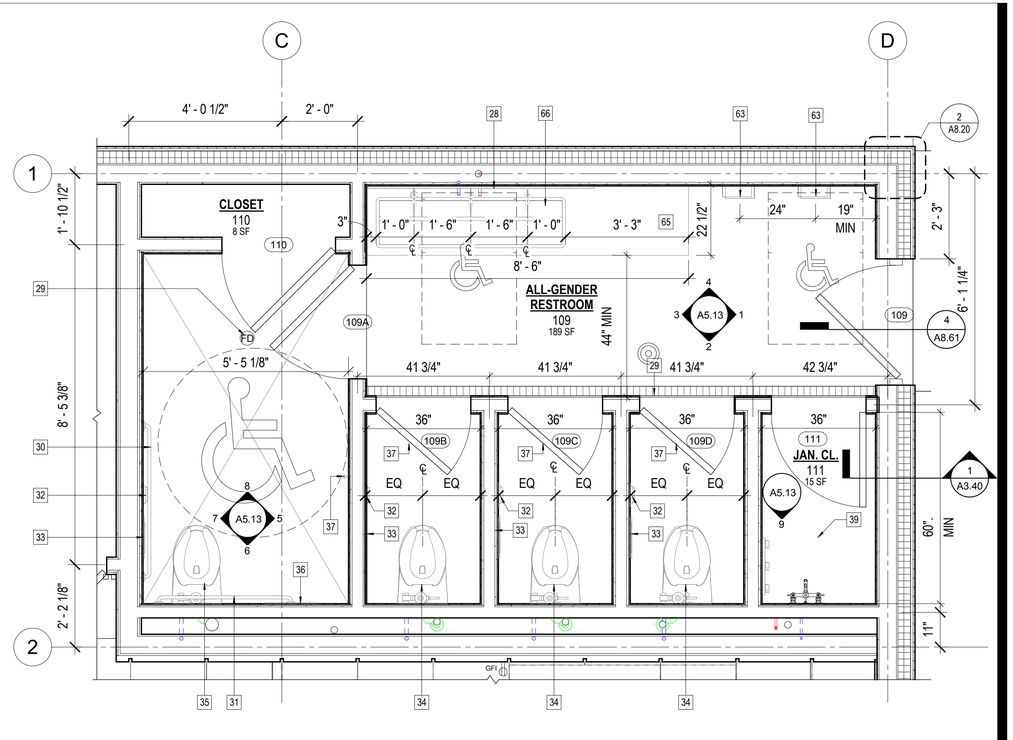

1 ENLARGED FLOOR PLAN - QUADRANT A
1/2" = 1'-0"

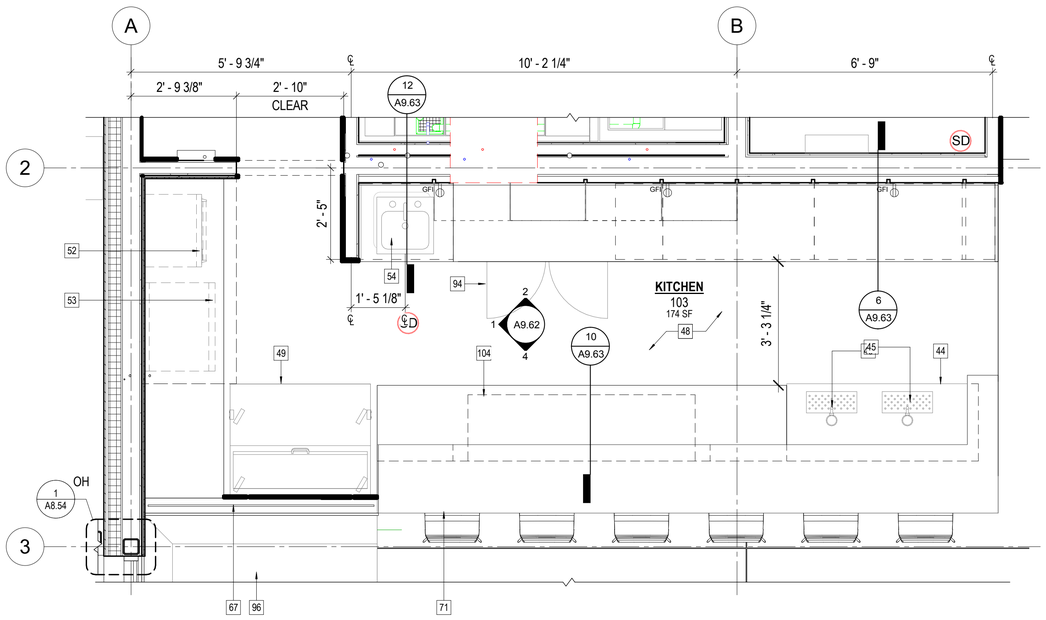

4 ENLARGED FLOOR PLAN - QUADRANT C
1/2" = 1'-0"

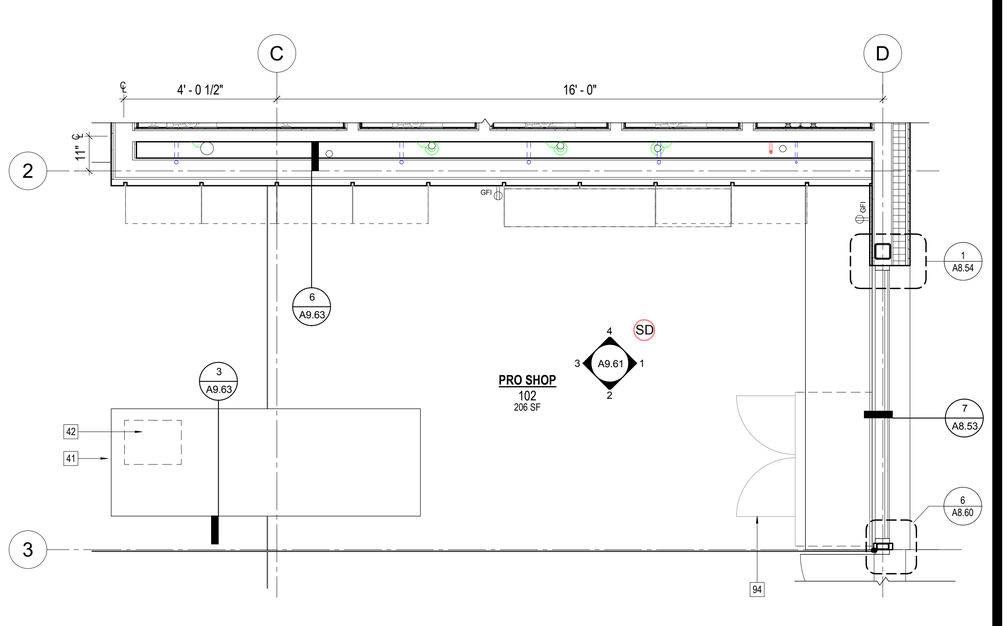

2 ENLARGED FLOOR PLAN - QUADRANT B
1/2" = 1'-0"

C:\Users\eharriso\Documents\1804_GGP_GC_CLUBHOUSE_R18_eharriso.rvt
11/2/2020 6:16:22 PM

Original Sheet Size: 22"x34"

BUREAU OF ARCHITECTURE

SAN FRANCISCO PUBLIC WORKS

Ron Alameida - City Architect
Julia Laue - Principal Architect / Bureau Manager
49 S Van Ness Ave., Suite 1100, San Francisco, CA 94103
Phone (628)271-2865

Golden Gate Park Golf Clubhouse

970 47th Avenue
San Francisco, CA 94121

Consultant

95% CD 11.16.2020

No.	Date	Revisions

PM
PA Noah Levy
Drawn Paul DeFreitas
Checked Author
Checker

NOT FOR CONSTRUCTION

Drawing Title

ENLARGED FLOOR PLANS_PREP, RESTROOM, KITCHEN & PRO SHOP

Sheet No.

A4.10

Scale: 1/2" = 1'-0"

Project No.

1804

KEY NOTE LEGEND	
1	FLOOR STANDING VRF INDOOR UNITS SET IN WOOD CASEWORK
67	GLASS SNEEZE GUARD ON COUNTER
71	QUARTZ COUNTERTOP, BAR HEIGHT
77	WOOD CASEWORK CLADDING O/ VRF UNITS
91	WALL-MOUNTED CANTILEVER QUARTZ COUNTERTOP
96	BUILT-IN WOOD BANQUETTE

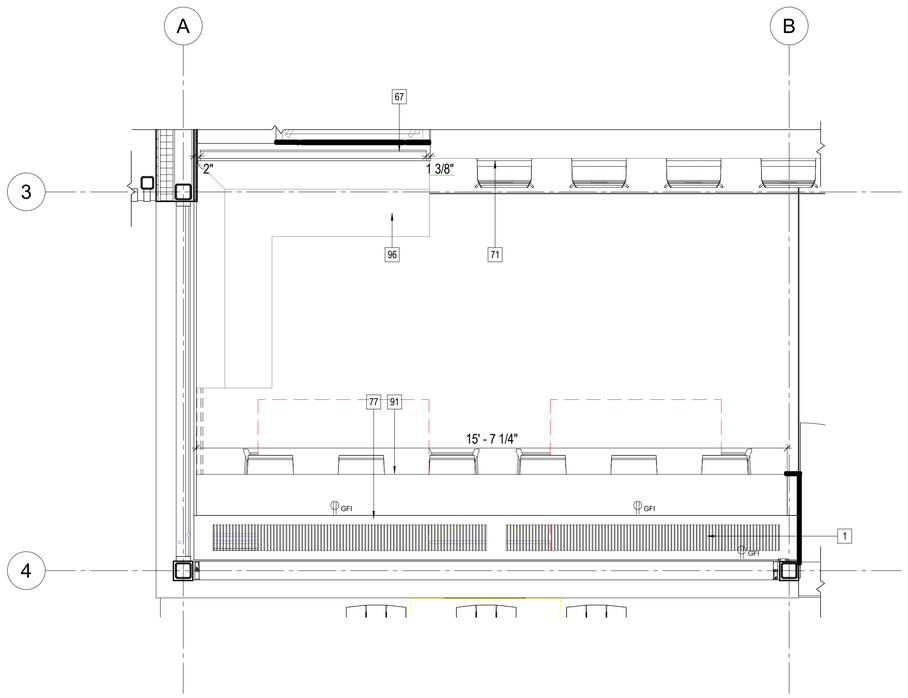

2 101 RETAIL/DINING - SOUTH
1/2" = 1'-0"

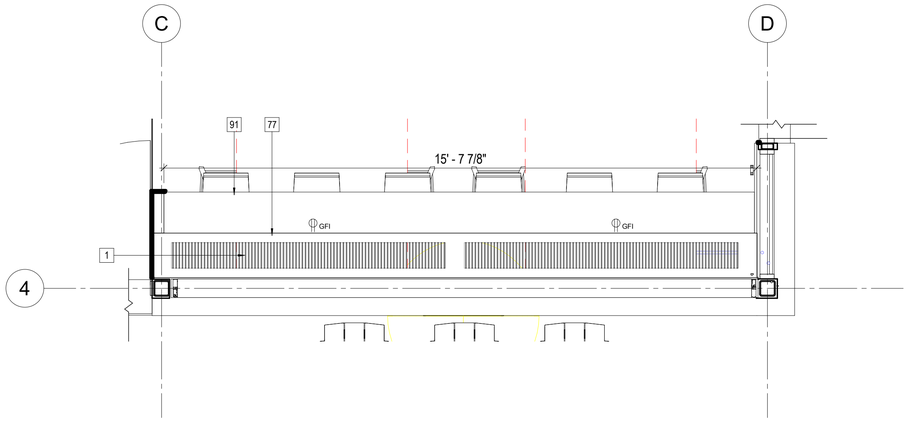

1 101 RETAIL/DINING - NORTH
1/2" = 1'-0"

BUREAU OF ARCHITECTURE

SAN FRANCISCO PUBLIC WORKS

Ron Alameida - City Architect

Julia Laue - Principal Architect / Bureau Manager

30 Van Ness Ave., Suite 4100, San Francisco, CA 94102
Fax (415)557-4701, Phone (415)557-4700

Golden Gate Park Golf Clubhouse

970 47th Avenue
San Francisco, CA 94121

Consultant

FOR DBI USE ONLY

Project Status 11.16.2020

No.	Date	Revisions

PM Noah Levy
PA Paul DeFreitas
Drawn Author
Checked Checker

NOT FOR CONSTRUCTION

Drawing Title

ENLARGED FLOOR PLANS_RETAIL/DINING

Sheet No.

A4.11

Scale: 1/2" = 1'-0"

Project No.

1804

C:\Users\eharriso\Documents\1804_GGP_GC_CLUBHOUSE_R18_eharriso.rvt
11/2/2020 6:16:25 PM

Original Sheet Size: 22"x34"

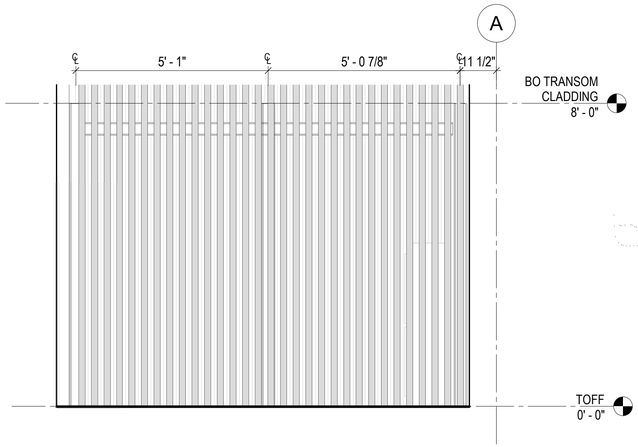

5 TRASH ENCLOSURE - EAST - EXTERIOR
1/2" = 1'-0"

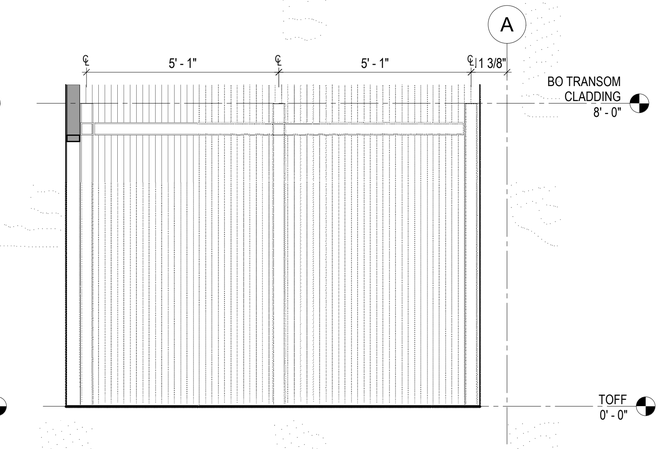

3 TRASH ENCLOSURE - WEST - INTERIOR
1/2" = 1'-0"

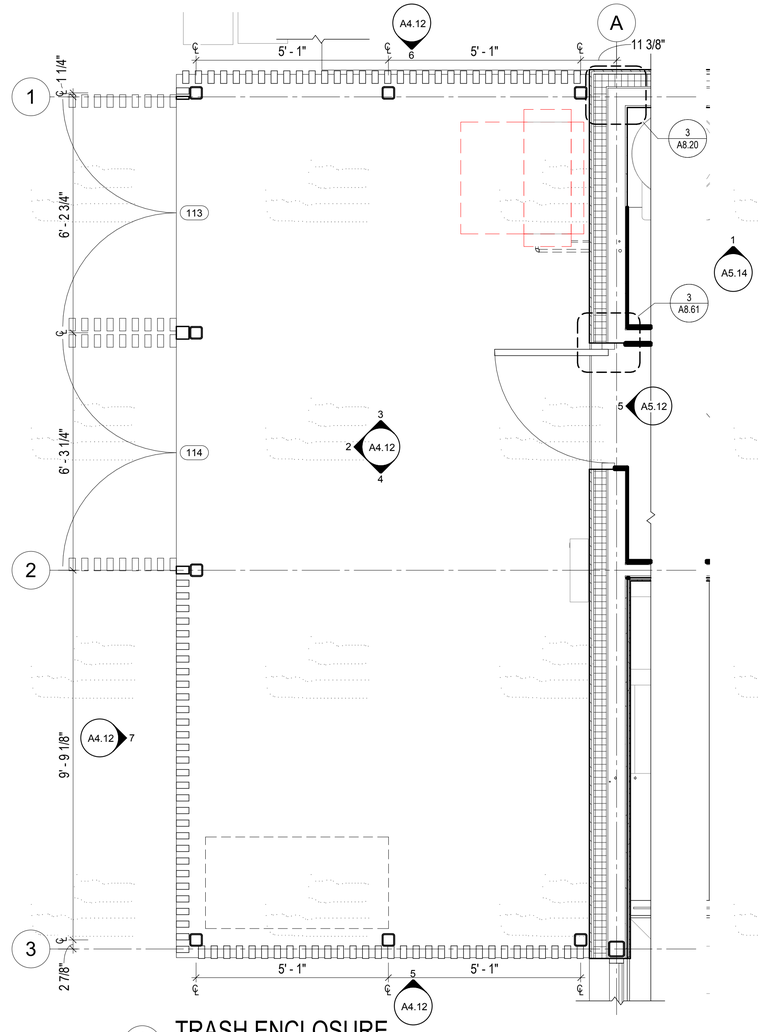

1 TRASH ENCLOSURE
1/2" = 1'-0"

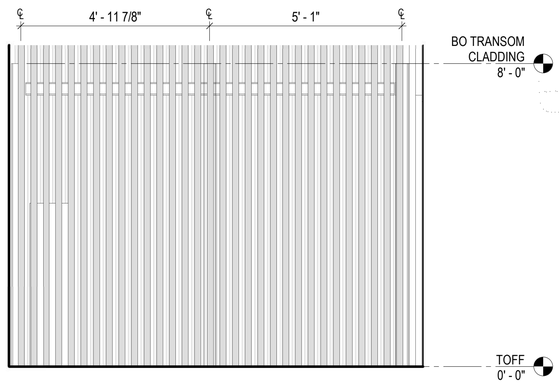

6 TRASH ENCLOSURE - WEST - EXTERIOR
1/2" = 1'-0"

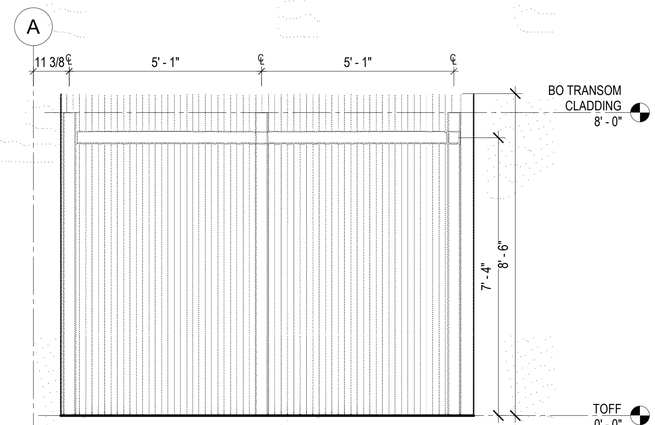

4 TRASH ENCLOSURE - EAST - INTERIOR
1/2" = 1'-0"

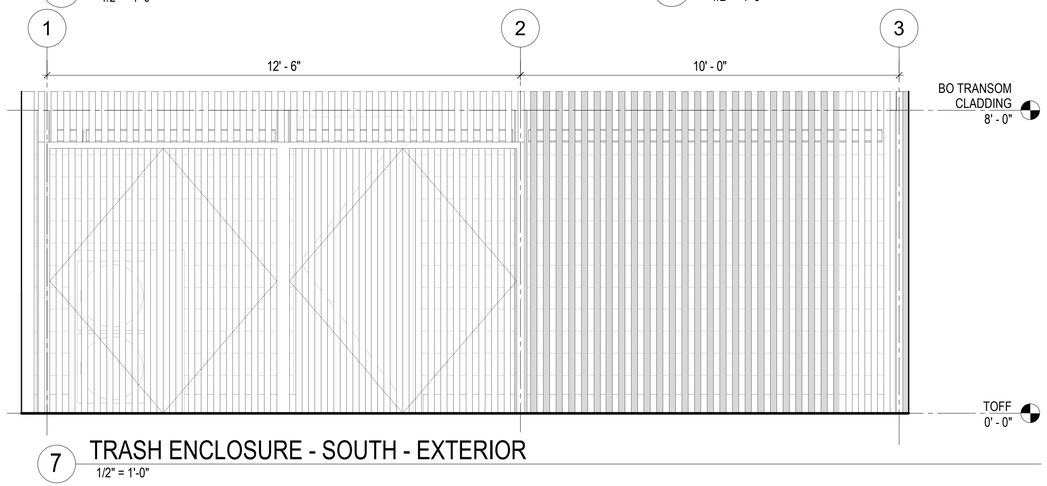

7 TRASH ENCLOSURE - SOUTH - EXTERIOR
1/2" = 1'-0"

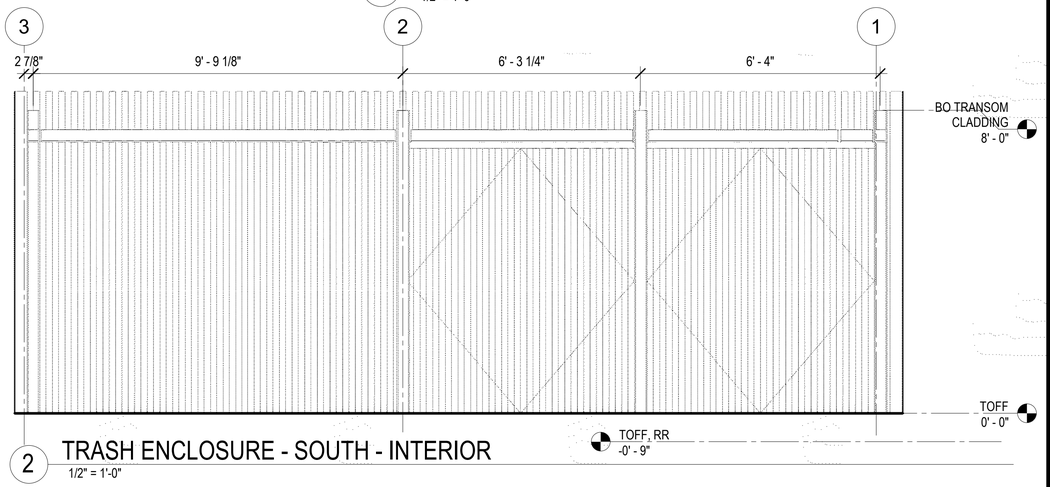

2 TRASH ENCLOSURE - SOUTH - INTERIOR
1/2" = 1'-0"

BUREAU OF ARCHITECTURE

SAN FRANCISCO PUBLIC WORKS

Ron Alameida - City Architect
Julia Laue - Principal Architect / Bureau Manager
49 S Van Ness Ave., Suite 1100, San Francisco, CA 94103
Phone (628)271-2865

Golden Gate Park Golf Clubhouse

970 47th Avenue
San Francisco, CA 94121

Consultant

95% CD 11.16.2020

No.	Date	Revisions

PM Noah Levy
PA Paul DeFreitas
Drawn Author
Checked Checker

NOT FOR CONSTRUCTION

Drawing Title

ENLARGED FLOOR PLANS_TRASH ENCLOSURE

Sheet No.

A4.12

Scale: 1/2" = 1'-0"

Project No.

1804

Original Sheet Size: 22"x34"

C:\Users\eharriso\Documents\1804_GGP_GC_CLUBHOUSE_R18_eharriso.rvt
11/2/2020 6:16:30 PM

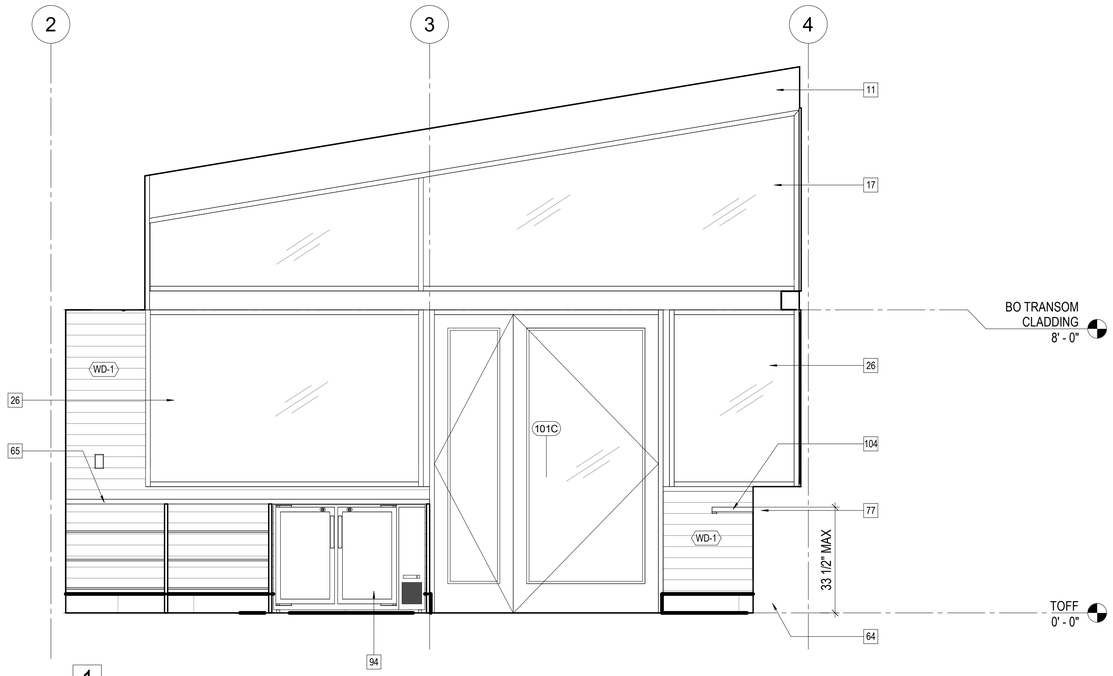

1

102/101 PRO SHOP - RETAIL/DINING

1/2" = 1'-0"

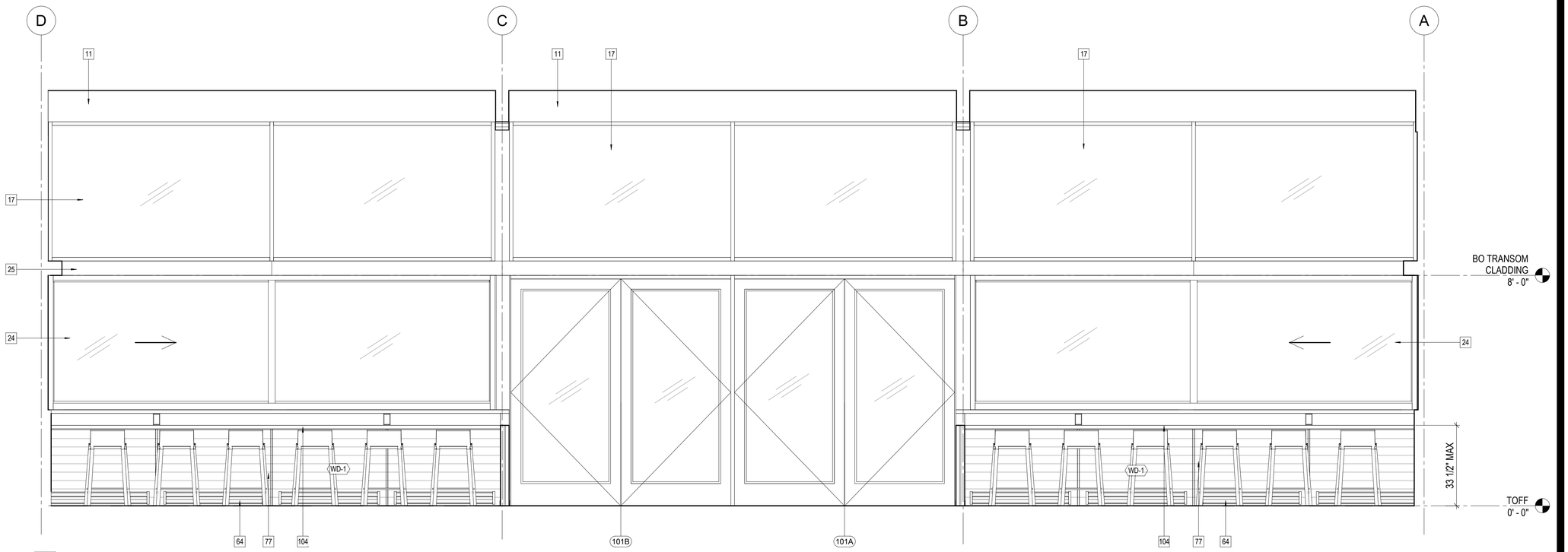

2

101 RETAIL/DINING

1/2" = 1'-0"

KEY NOTE LEGEND	
11	EXPOSED GLULAM BEAM, STAINED, SSD
17	FIXED CLERESTORY WINDOW SYSTEM, SEE WINDOW SCHEDULE
24	OPERABLE SLIDING WINDOWS, SEE WINDOW SCHEDULE
25	ALUM CLADDING AT TRANSOM BEAM
26	FIXED WINDOW SYSTEM, SEE WINDOW SCHEDULE
64	WALL BASE, SEE ROOM FINISH SCHEDULE
65	QUARTZ COUNTERTOP
77	WOOD CASEWORK CLADDING O/ VRF UNITS
94	UNDERCOUNTER BEVERAGE REFRIGERATOR
104	NON-FIXED METRO WIRE SHELVING RACK, 2 TIER

BUREAU OF ARCHITECTURE

SAN FRANCISCO PUBLIC WORKS

Ron Alameida - City Architect

Julia Laue - Principal Architect / Bureau Manager

49 S Van Ness Ave., Suite 1100, San Francisco, CA 94103
Phone (628)271-2865

Golden Gate Park Golf Clubhouse

970 47th Avenue
San Francisco, CA 94121

Consultant

95% CD 11.16.2020

No.	Date	Revisions

PM Noah Levy

PA Paul DeFreitas

Drawn Author

Checked Checker

NOT FOR CONSTRUCTION

Drawing Title

INTERIOR ELEVATIONS - KITCHEN AND PROSHOP_NORTH & EAST

Sheet No.

A5.10

Scale: 1/2" = 1'-0"

Project No.

1804

Original Sheet Size: 22"x34"

C:\Users\eharriso\Documents\1804_GGP_GC_CLUBHOUSE_R18_eharriso.rvt
11/2/2020 6:16:35 PM

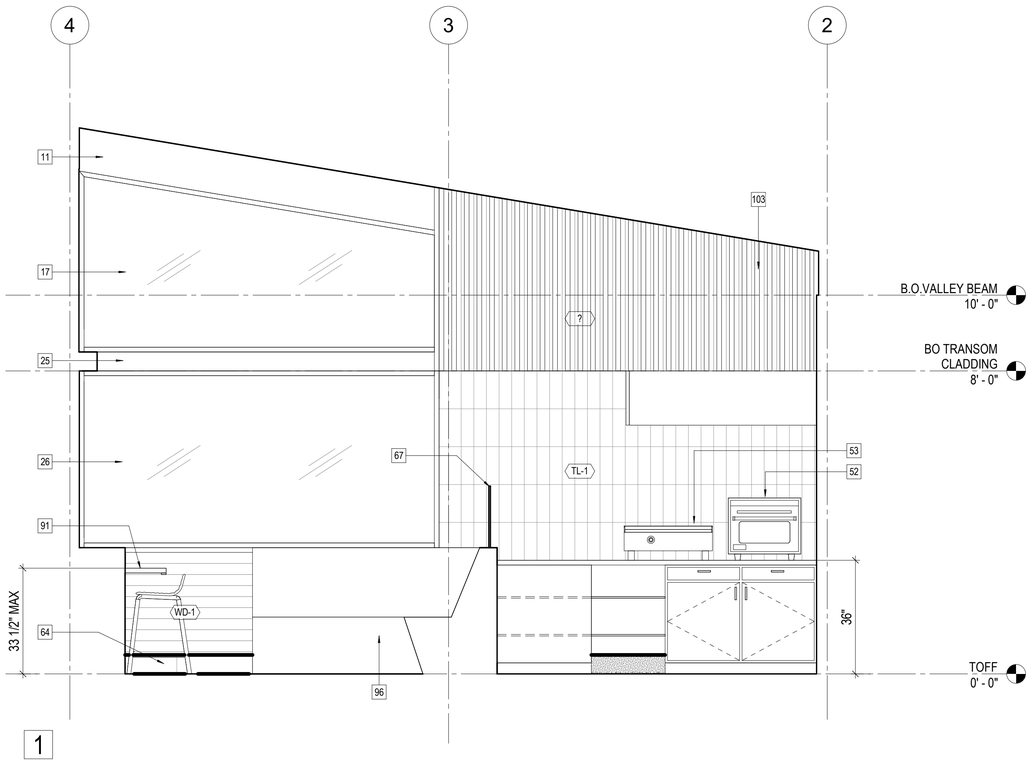

1

101/103 RETAIL/DINING - KITCHEN

1/2" = 1'-0"

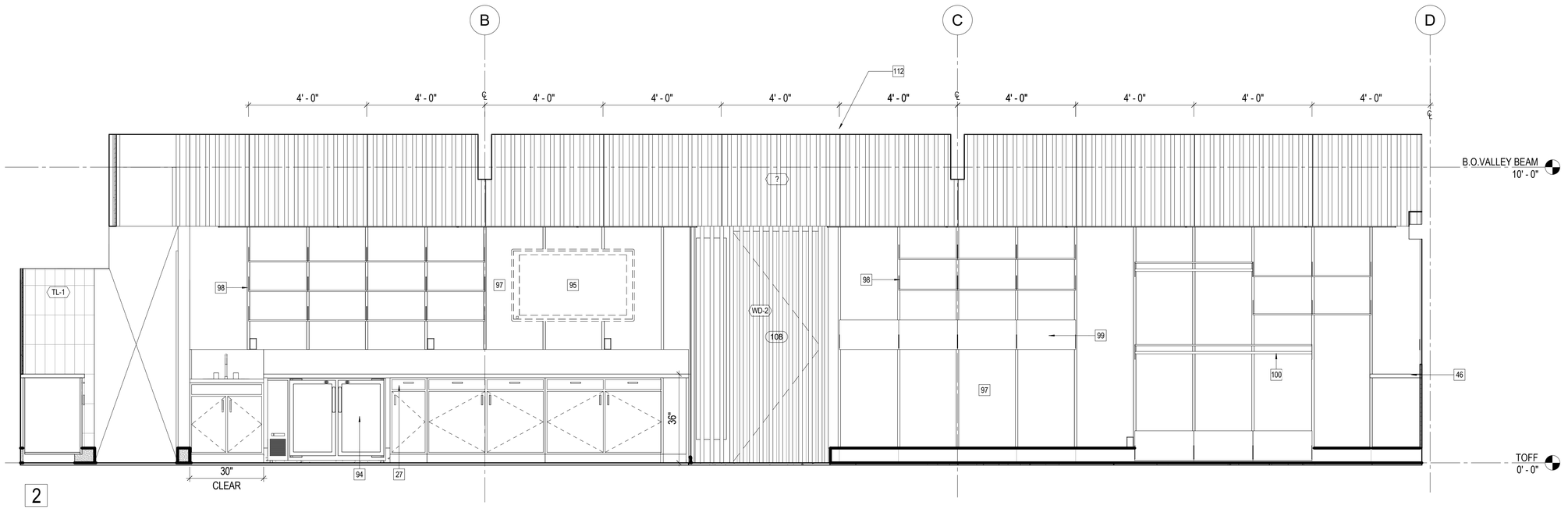

2

103/102 KITCHEN - PRO SHOP

1/2" = 1'-0"

KEY NOTE LEGEND	
11	EXPOSED GLULAM BEAM, STAINED, SSD
17	FIXED CLERESTORY WINDOW SYSTEM, SEE WINDOW SCHEDULE
25	ALUM CLADDING AT TRANSOM BEAM
26	FIXED WINDOW SYSTEM, SEE WINDOW SCHEDULE
27	QUARTZ COUNTER W/ WOOD BASE CABINETS
46	QUARTZ COUNTERTOP O/ WOOD BASE W/ OPEN STORAGE SHELVING
52	COUNTERTOP OVEN, NIC
53	GRIDDLE/FLAT TOP, NIC
64	WALL BASE, SEE ROOM FINISH SCHEDULE
67	GLASS SNEEZE GUARD ON COUNTER
91	WALL-MOUNTED CANTILEVER QUARTZ COUNTERTOP
94	UNDERCOUNTER BEVERAGE REFRIGERATOR
95	50" FLAT SCREEN TV, NIC
96	BUILT-IN WOOD BANQUETTE
97	ELECTRIFIED ADJUSTABLE MAGNETIC WALL PANEL SHELVING SYSTEM
98	CONFIGURABLE SHELVES
99	CONFIGURABLE CABINETS
100	CONFIGURABLE SHELVES W/ HANGING RACK
103	WOOD SLAT CLAD SHROUD
112	1/2" x 36" VERTICAL AIR VENTS, TYP

BUREAU OF ARCHITECTURE

SAN FRANCISCO PUBLIC WORKS

Ron Alameida - City Architect

Julia Laue - Principal Architect / Bureau Manager

30 Van Ness Ave., Suite 4100, San Francisco, CA 94102
Fax (415)557-4701, Phone (415)557-4700

Golden Gate Park Golf Clubhouse

970 47th Avenue
San Francisco, CA 94121

Consultant

FOR DBI USE ONLY

Project Status 11.16.2020

No.	Date	Revisions

PM Noah Levy

PA Paul DeFreitas

Drawn Author

Checked Checker

NOT FOR CONSTRUCTION

Drawing Title

INTERIOR ELEVATIONS - KITCHEN AND PROSHOP_SOUTH & WEST

Sheet No.

A5.11

Scale: 1/2" = 1'-0"

Project No.

1804

C:\Users\eharriso\Documents\1804_GGP_GC_CLUBHOUSE_R18_eharriso.rvt
11/2/2020 6:16:40 PM

Original Sheet Size: 22"x34"

KEY NOTE LEGEND	
54	SS HANDWASH SINK W/ SIDE SPLASH GUARDS, DROP INTO COUNTERTOP
56	METRO WIRE SHELVING RACKS OR SIM, 5 TIER, BOLT TO WALL
57	SS PREP SINK W/ INTERGRAL DRAINBOARD AND BACK SPLASH
58	SS 3 COMPARTMENT WAREWASHING SINK W/ 2 INTEGRAL DRAINBOARDS AND BACKSPLASH
59	COMMERCIAL REFRIGERATOR, NIC
60	COMMERICAL FREEZER, NIC
64	WALL BASE, SEE ROOM FINISH SCHEDULE

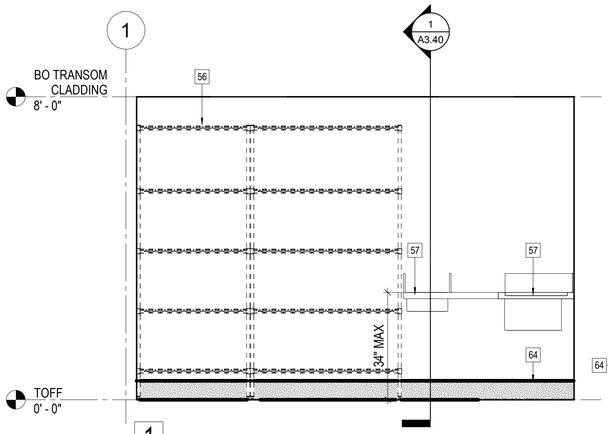

1

105 PREP/STORAGE

1/2" = 1'-0"

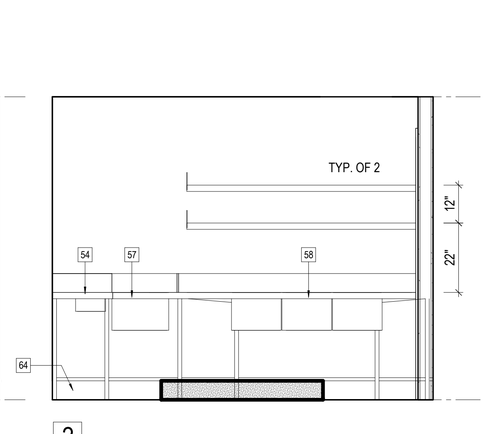

2

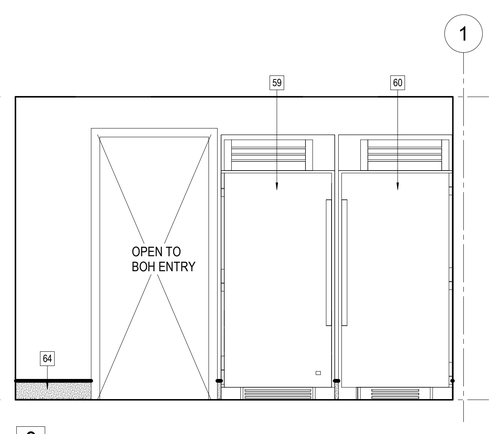

3

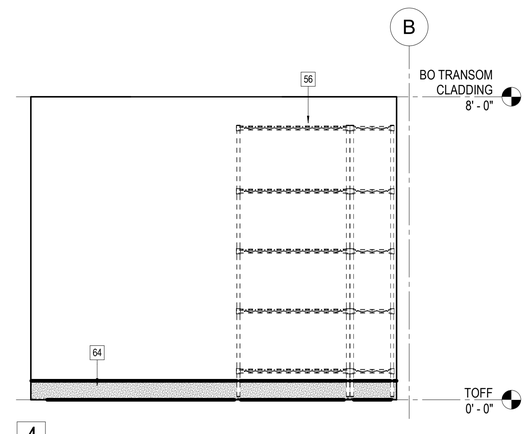

4

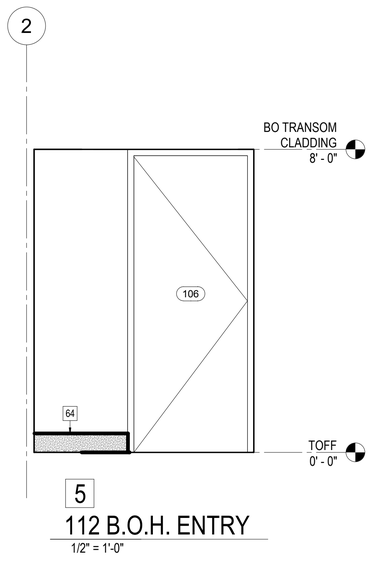

5

112 B.O.H. ENTRY

1/2" = 1'-0"

BUREAU OF ARCHITECTURE

SAN FRANCISCO PUBLIC WORKS

Ron Alameida - City Architect

Julia Laue - Principal Architect / Bureau Manager

49 S Van Ness Ave., Suite 1100, San Francisco, CA 94103
Phone (628)271-2865

Golden Gate Park Golf Clubhouse

970 47th Avenue
San Francisco, CA 94121

Consultant

95% CD 11.16.2020

No.	Date	Revisions

PM Noah Levy

PA Paul DeFreitas

Drawn Author

Checked Checker

NOT FOR CONSTRUCTION

Drawing Title

INTERIOR ELEVATIONS - BOH

Sheet No.

A5.12

Scale: 1/2" = 1'-0"

Project No.

1804

C:\Users\eharriso\Documents\1804_GGP_GC_CLUBHOUSE_R18_eharriso.rvt
11/2/2020 6:16:45 PM

Original Sheet Size: 22"x34"

KEY NOTE LEGEND	
11	EXPOSED GLULAM BEAM, STAINED, SSD
17	FIXED CLERESTORY WINDOW SYSTEM, SEE WINDOW SCHEDULE
28	MIRROR, SEE SHEET G3.32
30	48" GRAB BAR, SEE SHEET G3.32
31	42" GRAB BAR, SEE SHEET G3.32
32	TOILET TISSUE DISPENSER, SEE SHEET G3.32
33	SANITARY NAPKIN DISPOSAL, SEE SHEET G3.32
35	WALL-MOUNTED ADA WATER CLOSET, SEE SHEET G3.32
37	COAT HOOK, SEE SHEET G3.32
38	MOP SINK
63	HAND DRYER
66	COMPOSITE SINK & COUNTERTOP
113	INT WALL MOUNTED LED INDIRECT/DIRECT LINEAR WALL LIGHT FIXTURE, SED

ELEVATION - RESTROOM 109 - NORTH

1/2" = 1'-0"

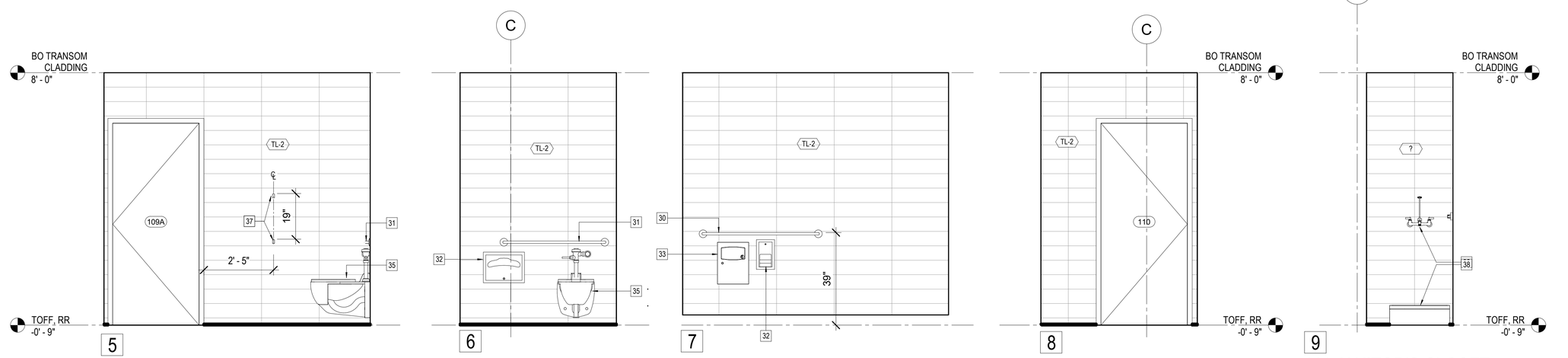

109 ACCESSIBLE STALL

1/2" = 1'-0"

111 JANITOR'S CLOSET

1/2" = 1'-0"

BUREAU OF ARCHITECTURE

SAN FRANCISCO PUBLIC WORKS

Ron Alameida - City Architect

Julia Laue - Principal Architect / Bureau Manager

49 S Van Ness Ave., Suite 1100, San Francisco, CA 94103
Phone (628)271-2865

Golden Gate Park Golf Clubhouse

970 47th Avenue
San Francisco, CA 94121

Consultant

95% CD 11.16.2020

No.	Date	Revisions

PM Noah Levy
PA Paul DeFreitas
Drawn Author
Checked Checker

NOT FOR CONSTRUCTION

Drawing Title

INTERIOR ELEVATIONS - RESTROOMS

Sheet No. A5.13

Scale: 1/2" = 1'-0"

Project No. 1804

Original Sheet Size: 22"x34"

C:\Users\eharriso\Documents\1804_GGP_GC_CLUBHOUSE_R18_eharriso.rvt
11/2/2020 6:16:55 PM

KEY NOTE LEGEND	
38	MOP SINK
39	MOP RACK
114	WATER HEATER, SMD

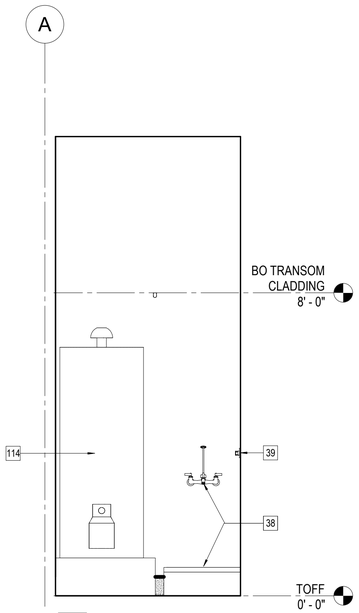

1

104 UTILITY

1/2" = 1'-0"

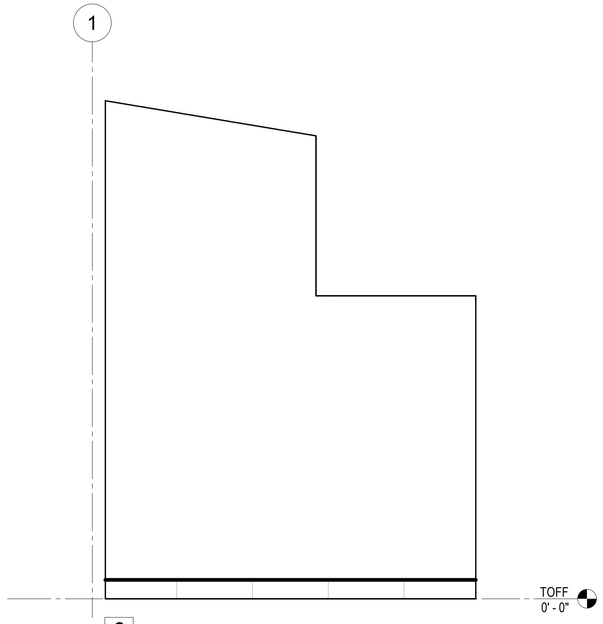

2

108 ADMIN

1/2" = 1'-0"

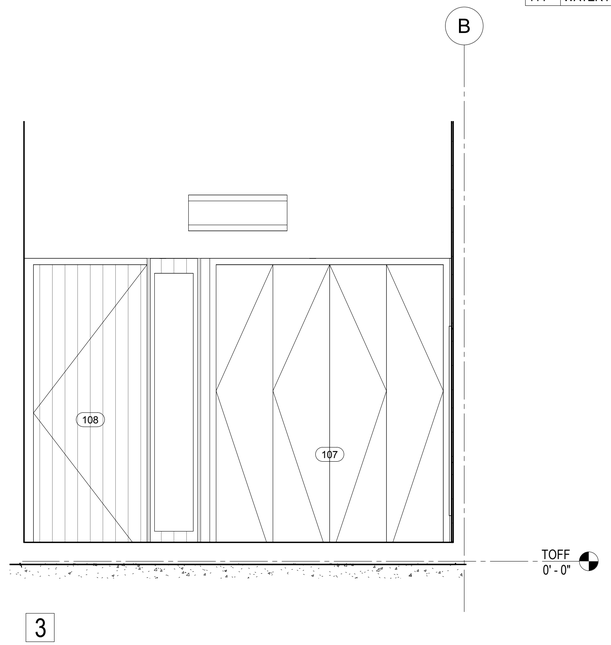

3

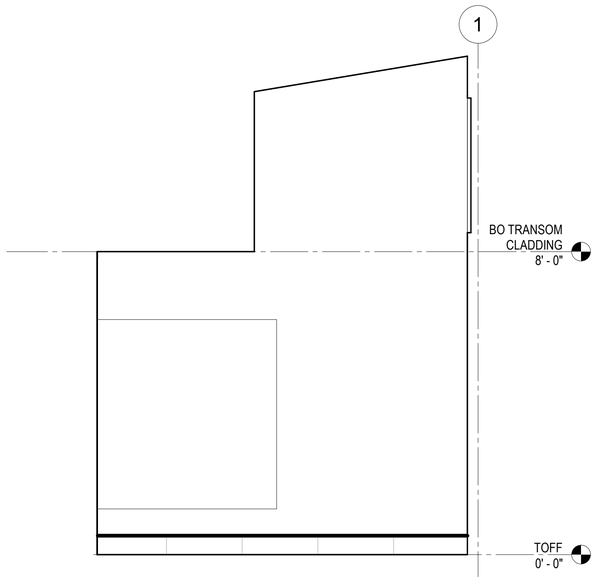

4

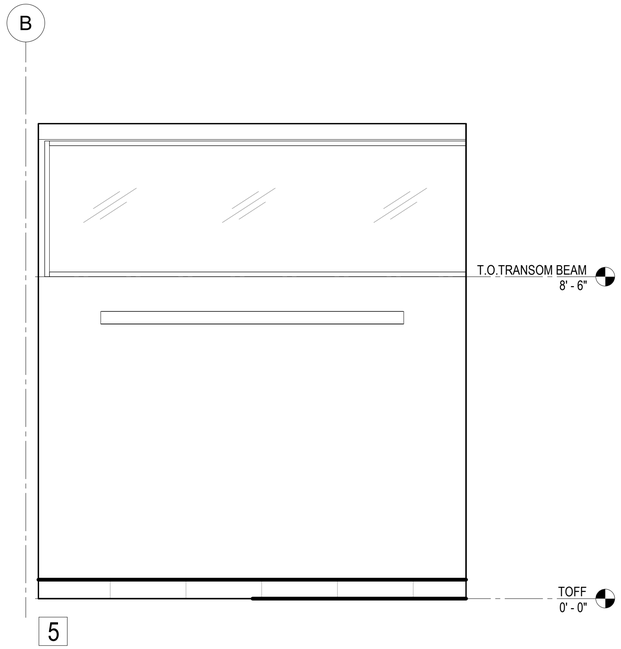

5

C:\Users\eharriso\Documents\1804_GGP_GC_CLUBHOUSE_R18_eharriso.rvt
11/2/2020 6:16:59 PM

Original Sheet Size: 22"x34"

BUREAU OF ARCHITECTURE

SAN FRANCISCO PUBLIC WORKS

Ron Alameida - City Architect

Julia Laue - Principal Architect / Bureau Manager

49 S Van Ness Ave., Suite 1100, San Francisco, CA 94103
Phone (628)271-2865

Golden Gate Park Golf Clubhouse

970 47th Avenue
San Francisco, CA 94121

Consultant

95% CD 11.16.2020

No.	Date	Revisions

PM Noah Levy

PA Paul DeFreitas

Drawn Author

Checked Checker

NOT FOR CONSTRUCTION

Drawing Title

INTERIOR ELEVATIONS - ADMIN AND UTILITY

Sheet No.

A5.14

Scale: 1/2" = 1'-0"

Project No.

1804

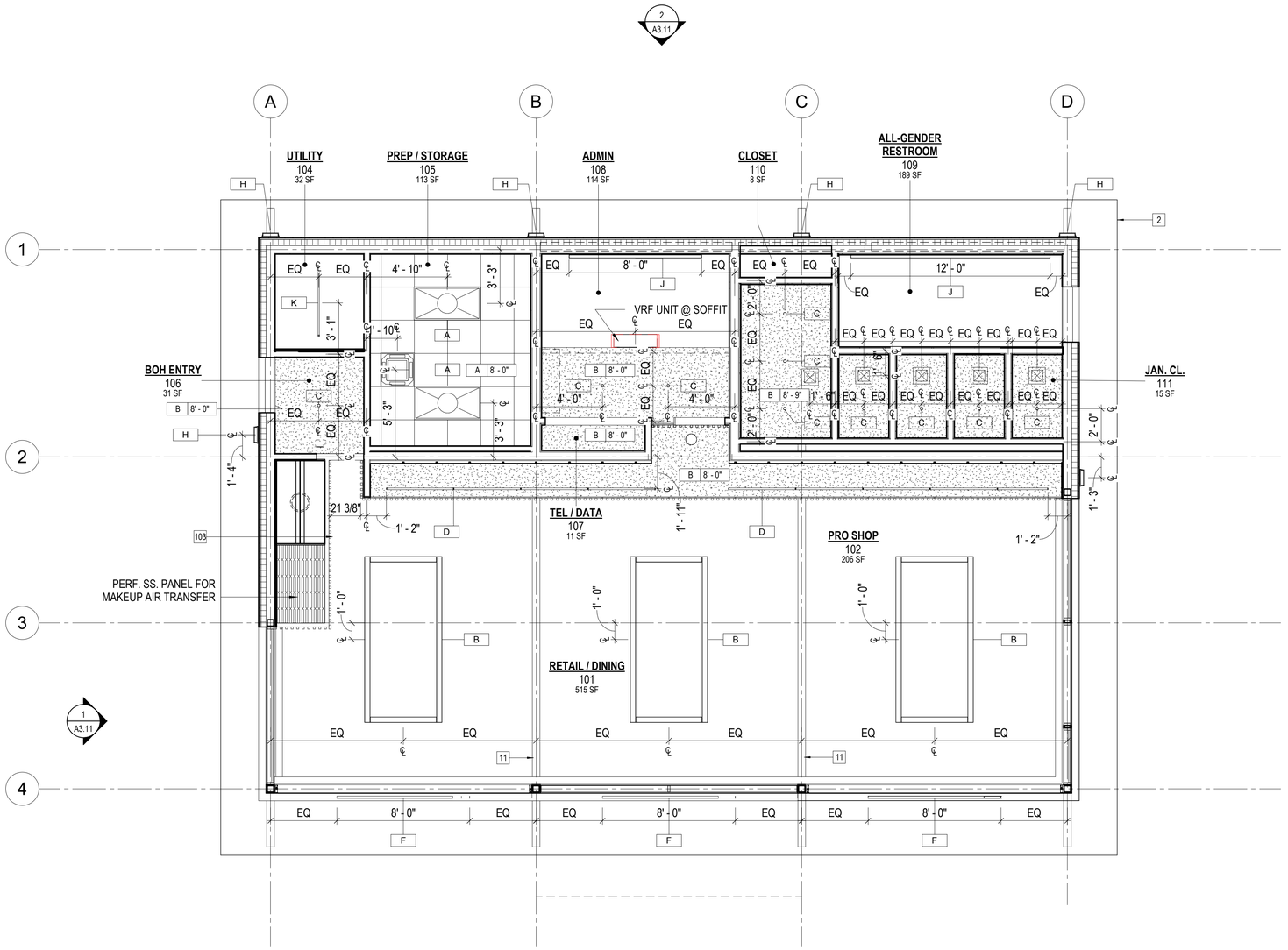

1 REFLECTED CEILING PLAN

1/4" = 1'-0"

REFLECTED CEILING PLAN LEGEND

- TYPE A - SUSPENDED 24" X 24" COMMERCIAL KITCHEN ACOUSTICAL CEILING TILE
- TYPE B- SUSPENDED GYPSUM BOARD CEILING ON WOOD CEILING JOISTS
- EXPOSED TO CLT & GLULAM BEAMS ABOVE
- VRF CEILING CASSETTE, SMD

LIGHTING FIXTURE LEGEND

TYPE A	2'x4' LED TROFFER, SED
TYPE B	LED INDIRECT/DIRECT RECTANGULAR PENDANT @ 8'-0" AFF 4'x10', SED
TYPE C	2" Ø LED DOWNLIGHT, SED
TYPE D	SURFACE MOUNTED ASYMMETRIC LED WALL WASH MICRO PROFILE, SED
TYPE F	RECESSED LED EXTERIOR STRIP IN TRANSOM BEAM CLADDING, SED
TYPE H	EXTERIOR WALL MOUNTED LED AREA LIGHT, SED
TYPE J	INTERIOR WALL MOUNTED LED INDIRECT/DIRECT LINEAR WALL LIGHT @ 6" BELOW CLERESTORY WINDOW SILL, SED

BUREAU OF ARCHITECTURE

SAN FRANCISCO PUBLIC WORKS

Ron Alameida - City Architect

Julia Laue - Principal Architect / Bureau Manager

49 S Van Ness Ave., Suite 1100, San Francisco, CA 94103
Phone (628)271-2865

Golden Gate Park Golf Clubhouse

970 47th Avenue
San Francisco, CA 94121

Consultant

95% CD 11.16.2020

No.	Date	Revisions

PM Noah Levy
PA Paul DeFreitas
Drawn Author
Checked Checker

NOT FOR CONSTRUCTION

Drawing Title

REFLECTED CEILING PLAN

Sheet No. A6.10

Scale: As indicated

Project No. 1804

Original Sheet Size: 22"x34"

C:\Users\eharriso\Documents\1804_GGP_GC_CLUBHOUSE_R18_eharriso.rvt
11/2/2020 6:17:05 PM

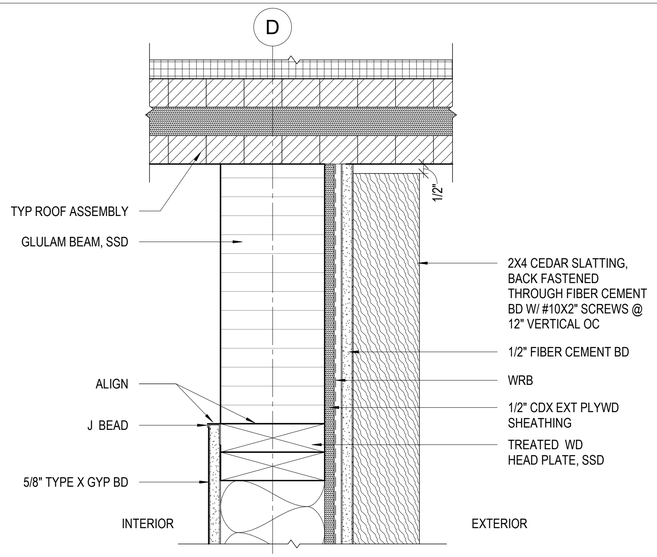

4 EXTERIOR WALL & SLATTINGAT GLU LAM

3" = 1'-0"

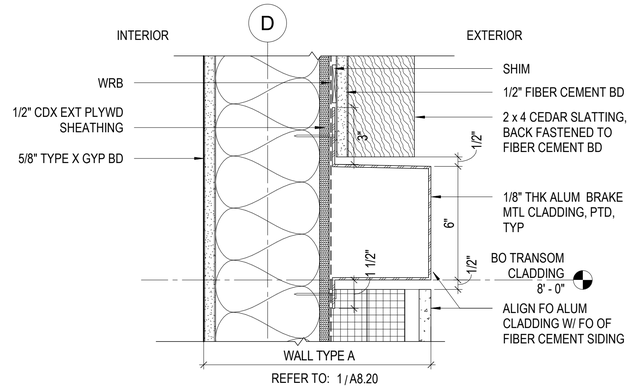

5 EXTERIOR WALL AT CEDAR SLATTING

3" = 1'-0"

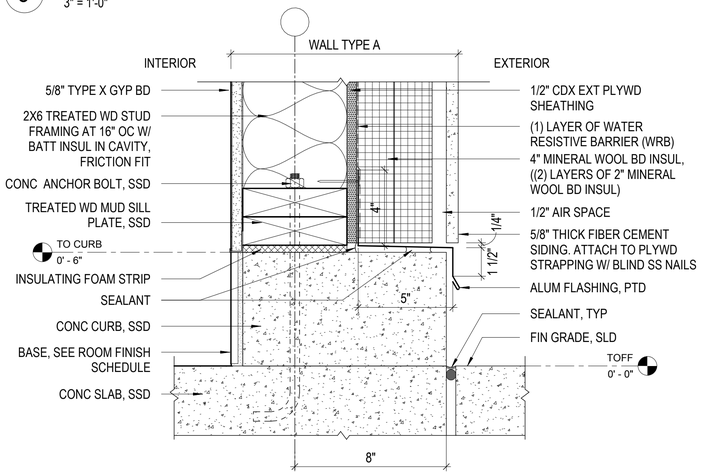

6 WALL TYPE A - EXTERIOR SHEAR WALL, BASE

3" = 1'-0"

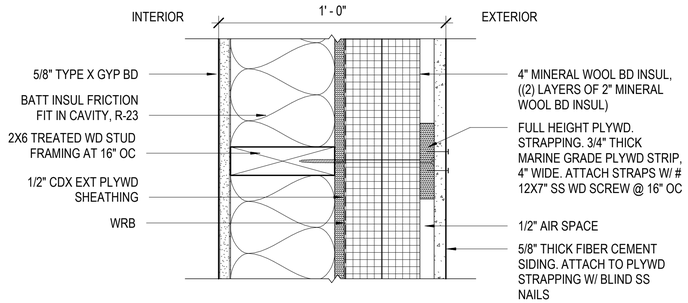

1 WALL TYPE A - EXTERIOR SHEAR WALL PLAN VIEW

3" = 1'-0"

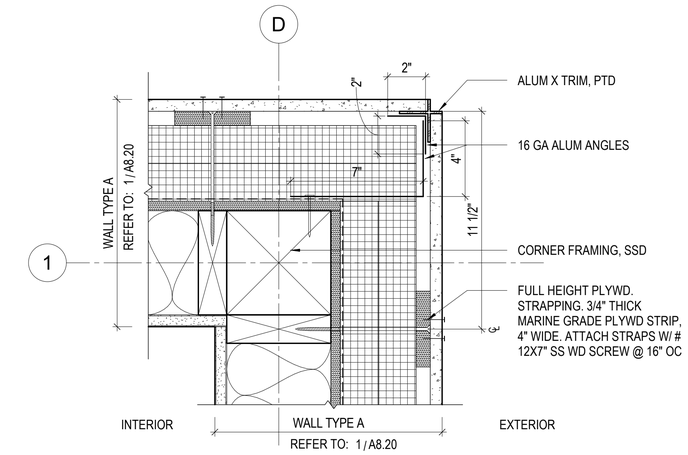

2 TYPICAL CORNER AT EXTERIOR WALL

3" = 1'-0"

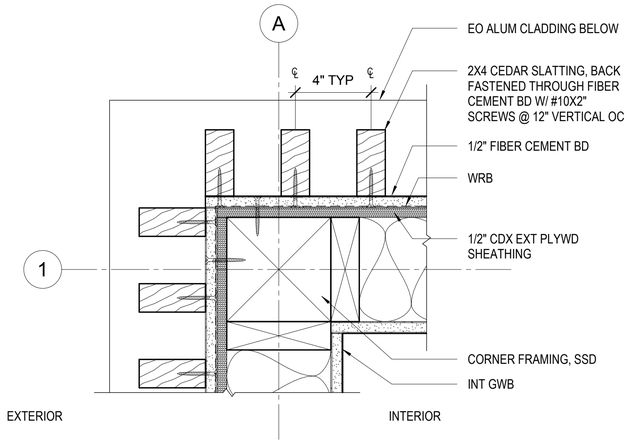

3 CORNER DETAIL AT SLATTING

3" = 1'-0"

BUREAU OF ARCHITECTURE

SAN FRANCISCO PUBLIC WORKS

Ron Alameida - City Architect

Julia Laue - Principal Architect / Bureau Manager

49 S Van Ness Ave., Suite 1100, San Francisco, CA 94103
Phone (628)271-2865

Golden Gate Park Golf Clubhouse

970 47th Avenue
San Francisco, CA 94121

Consultant

95% CD 11.16.2020

No.	Date	Revisions

PM Noah Levy

PA Paul DeFreitas

Drawn Author

Checked Checker

NOT FOR CONSTRUCTION

Drawing Title

EXTERIOR WALL DETAILS

Sheet No.

A8.20

Scale: 3" = 1'-0"

Project No.

1804

C:\Users\ehamso\Documents\1804_GGP_GC_CLUBHOUSE_R18_ehamso.rvt
11/2/2020 6:17:07 PM

Original Sheet Size: 22"x34"

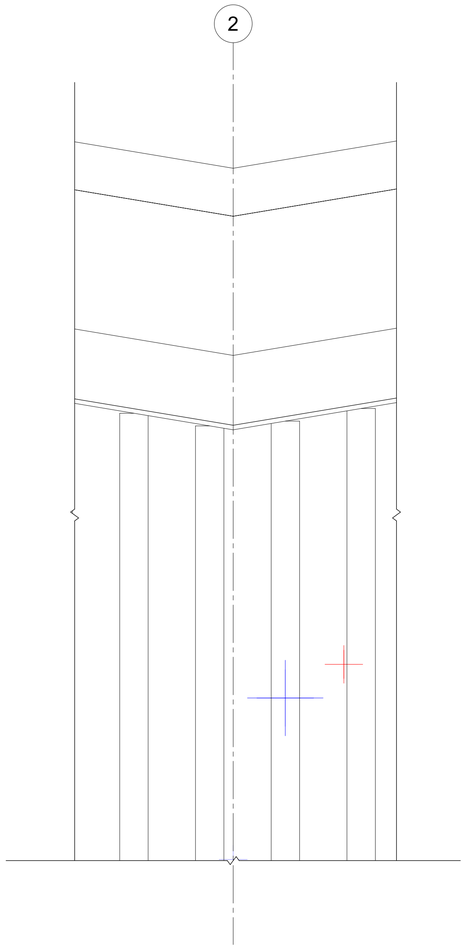

5 GUTTER, SCUPPER AND DOWNSPOUT TRANSITION
3" = 1'-0"

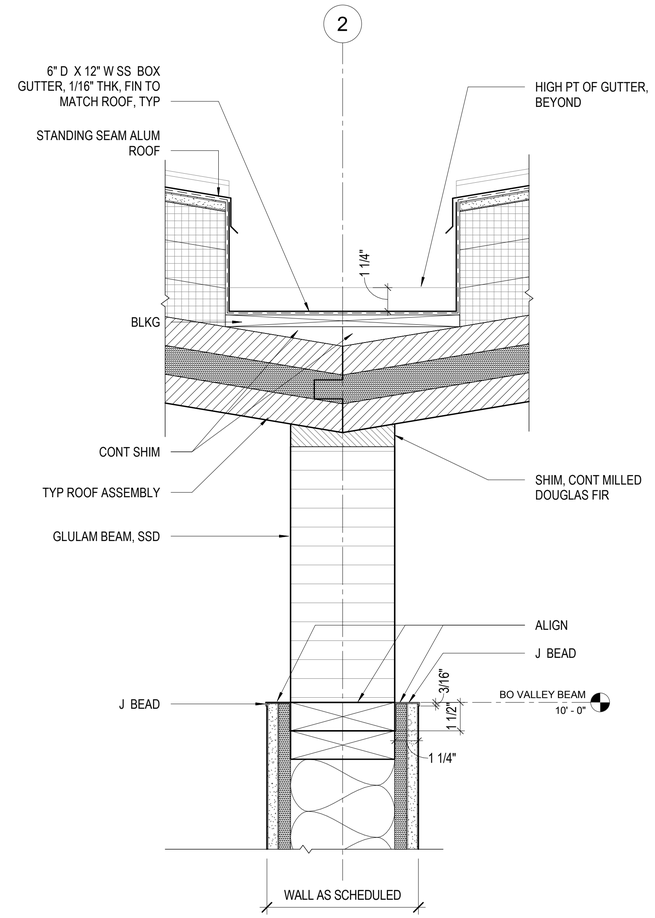

4 ROOFING & GUTTER AT VALLEY
3" = 1'-0"

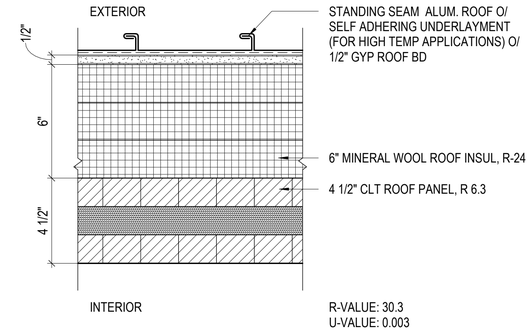

1 TYPICAL ROOF ASSEMBLY
3" = 1'-0"

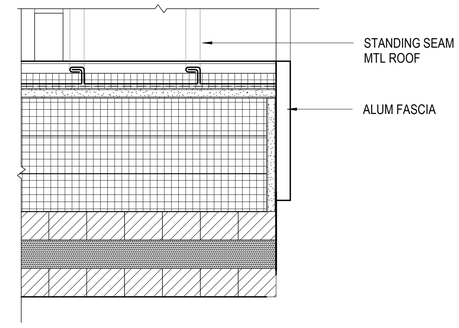

2 ROOFING AT EAVE & FASCIA
3" = 1'-0"

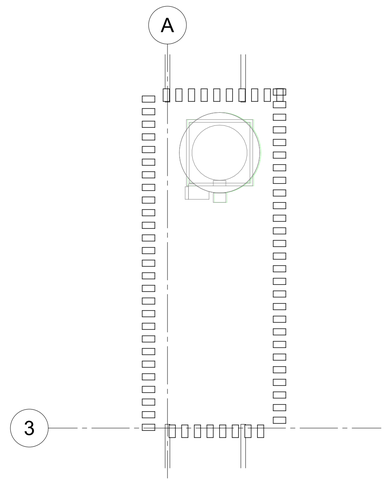

6 CHIMNEY PLAN
1/2" = 1'-0"

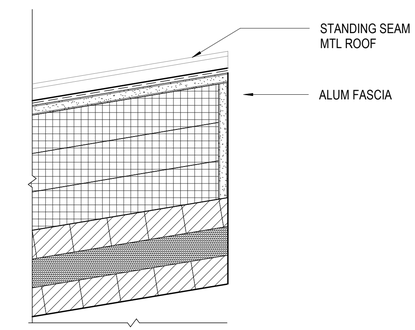

3 ROOFING AT EAVE & FASCIA
3" = 1'-0"

BUREAU OF ARCHITECTURE

SAN FRANCISCO PUBLIC WORKS

Ron Alameida - City Architect
Julia Laue - Principal Architect / Bureau Manager
49 S Van Ness Ave., Suite 1100, San Francisco, CA 94103
Phone (628)271-2865

Golden Gate Park Golf Clubhouse

970 47th Avenue
San Francisco, CA 94121

Consultant

95% CD 11.16.2020

No.	Date	Revisions

PM Noah Levy
PA Paul DeFreitas
Drawn Author
Checked Checker

NOT FOR CONSTRUCTION

Drawing Title

ROOFING DETAILS

Sheet No.
A8.30
Scale: As indicated

Project No.
1804

Original Sheet Size: 22"x34"

C:\Users\eharriso\Documents\1804_GGP_GC_CLUBHOUSE_R18_eharriso.rvt
11/2/2020 6:17:09 PM

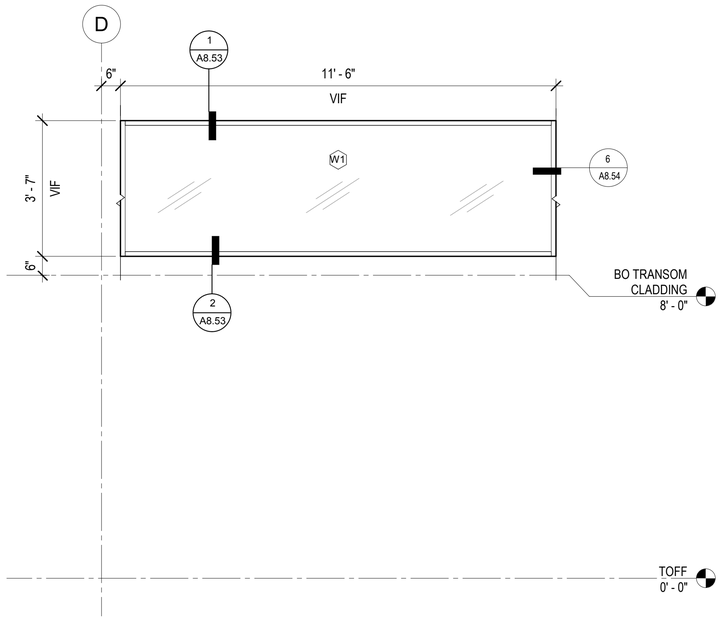

1B EXTERIOR WINDOW ELEVATION - WEST, W1

1/2" = 1'-0"

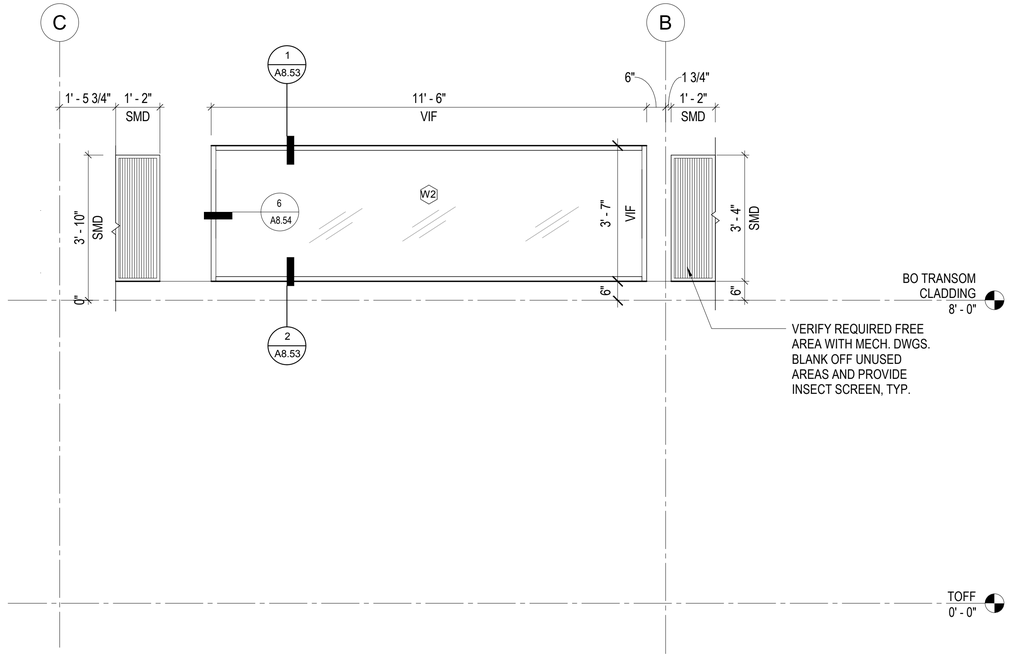

1A EXTERIOR WINDOW & LOUVER ELEVATION - WEST

1/2" = 1'-0"

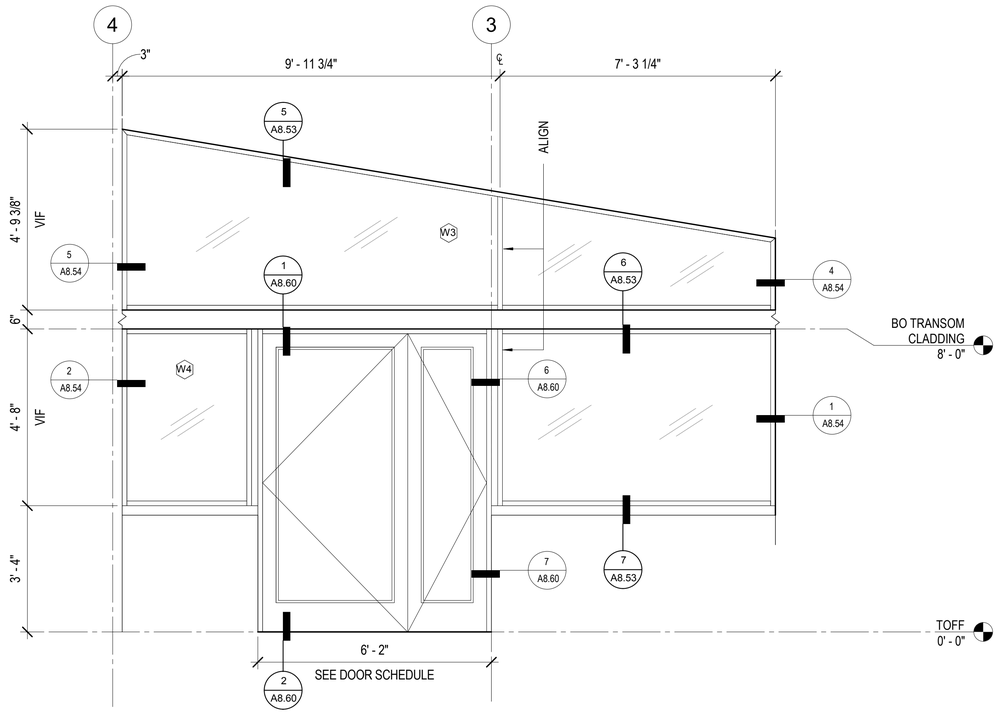

2 EXTERIOR WINDOW & DOOR ELEVATION - NORTH

1/2" = 1'-0"

BUREAU OF ARCHITECTURE

SAN FRANCISCO PUBLIC WORKS

Ron Alameida - City Architect

Julia Laue - Principal Architect / Bureau Manager

49 S Van Ness Ave., Suite 1100, San Francisco, CA 94103
Phone (628)271-2865

Golden Gate Park Golf Clubhouse

970 47th Avenue
San Francisco, CA 94121

Consultant

95% CD 11.16.2020

No.	Date	Revisions

PM Noah Levy

PA Paul DeFreitas

Drawn Author

Checked Checker

NOT FOR CONSTRUCTION

Drawing Title

EXTERIOR WINDOW AND LOUVER SCHEDULE_WEST NORTH

Sheet No.

A8.51

Scale: 1/2" = 1'-0"

Project No.

1804

Original Sheet Size: 22"x34"

C:\Users\eharriso\Documents\1804_GGP_GC_CLUBHOUSE_R18_eharriso.rvt
11/2/2020 6:17:10 PM

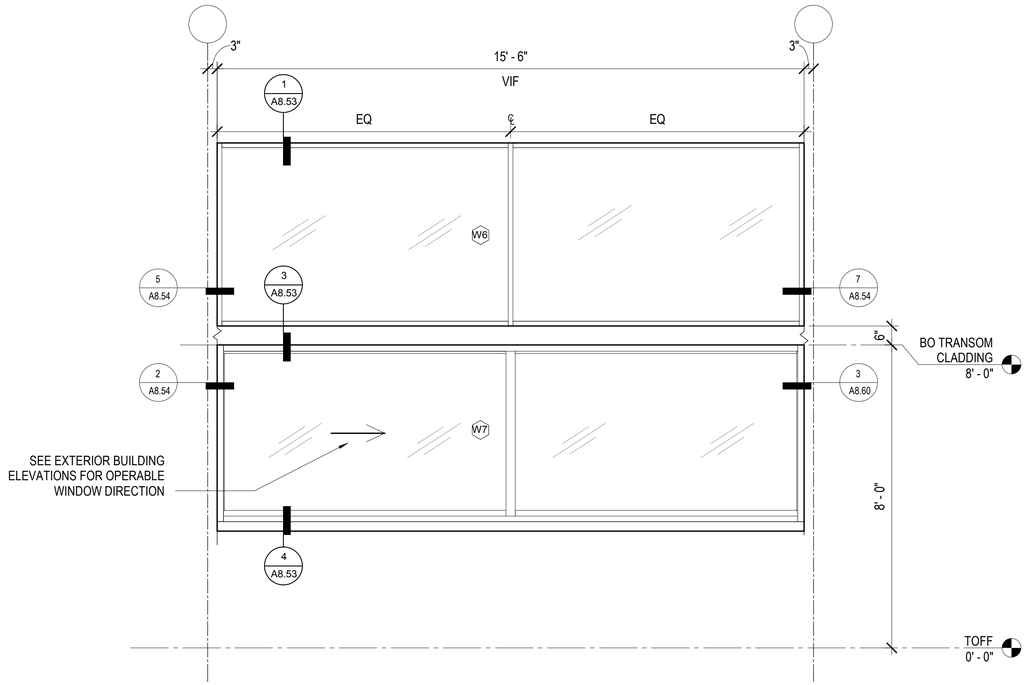

1B EXTERIOR WINDOW ELEVATION - EAST TYPES W5 & W6

1/2" = 1'-0"

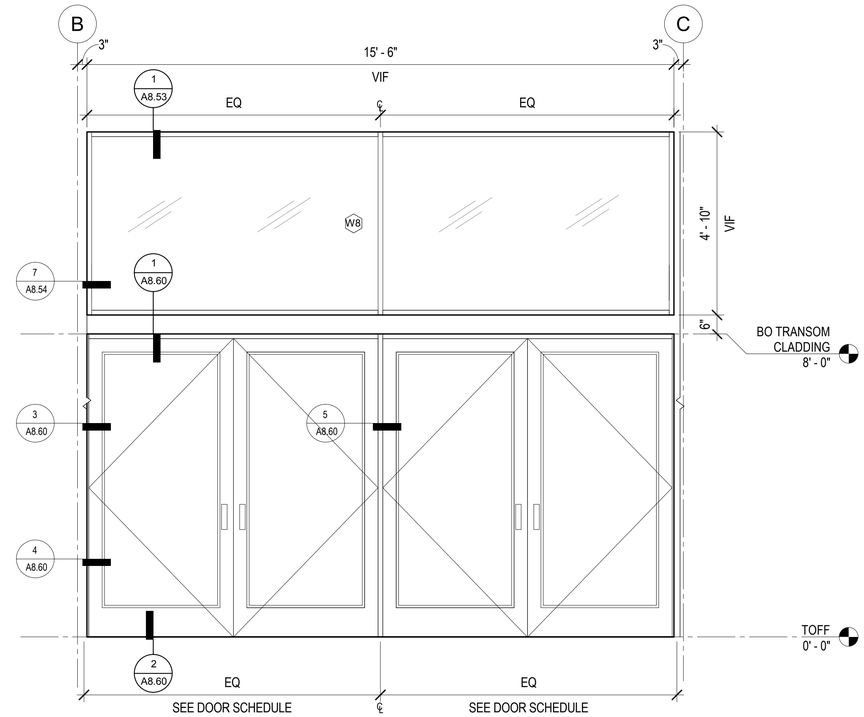

1A EXTERIOR WINDOW & DOOR ELELVATION - EAST ENTRY

1/2" = 1'-0"

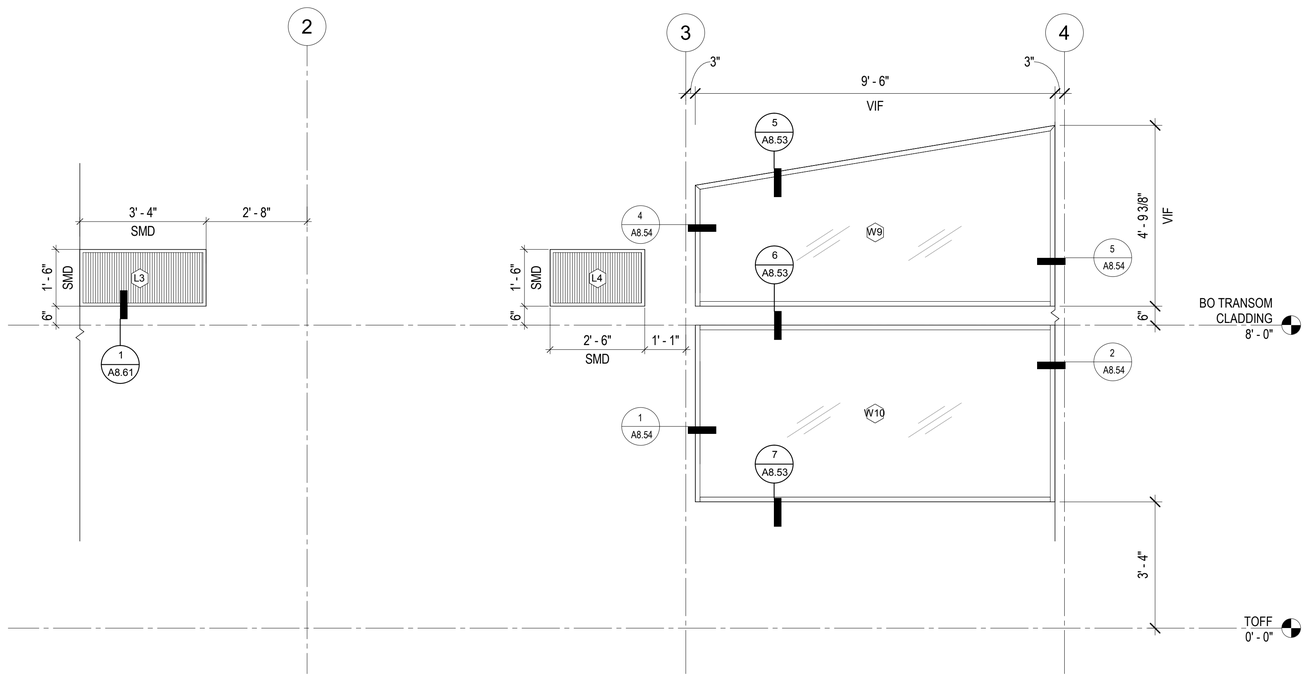

2 EXTERIOR WINDOW ELEVATION - SOUTH

1/2" = 1'-0"

BUREAU OF ARCHITECTURE

SAN FRANCISCO PUBLIC WORKS

Ron Alameida - City Architect

Julia Laue - Principal Architect / Bureau Manager

49 S Van Ness Ave., Suite 1100, San Francisco, CA 94103
Phone (628)271-2865

Golden Gate Park Golf Clubhouse

970 47th Avenue
San Francisco, CA 94121

Consultant

95% CD 11.16.2020

No.	Date	Revisions

PM Noah Levy

PA Paul DeFreitas

Drawn Author

Checked Checker

NOT FOR CONSTRUCTION

Drawing Title

EXTERIOR WINDOW AND LOUVER SCHEDULE - EAST SOUTH

Sheet No. A8.52

Scale: 1/2" = 1'-0"

Project No. 1804

Original Sheet Size: 22"x34"

C:\Users\eharriso\Documents\1804_GGP_GC_CLUBHOUSE_R18_eharriso.rvt
11/2/2020 6:17:12 PM

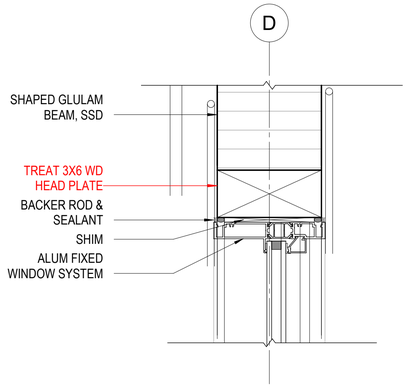

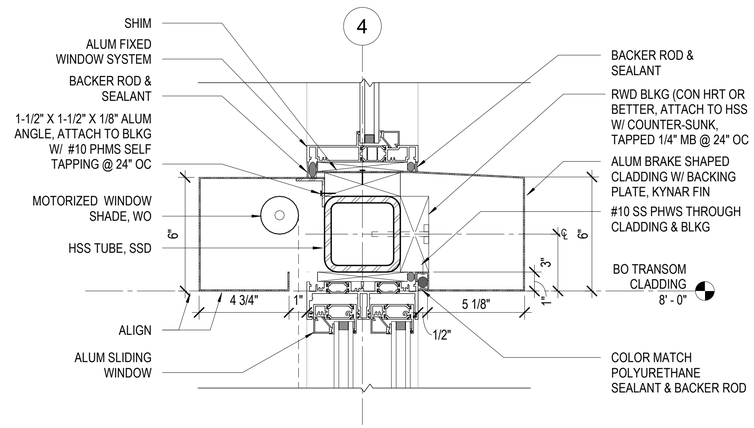

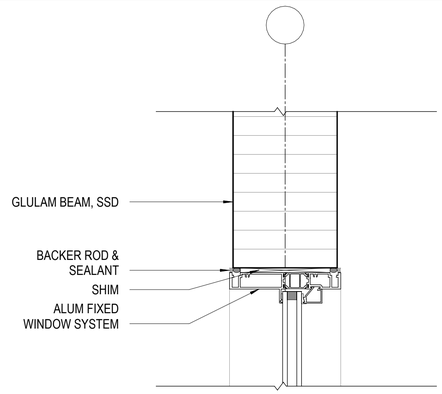

5 CLERESTORY HEAD DETAIL AT SLOPED GLULAM BEAM
3" = 1'-0"

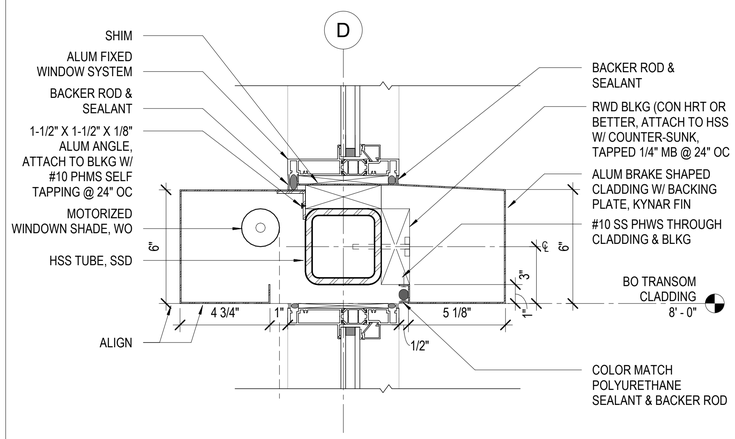

3 CLERESTORY SILL/ OPERABLE WIN. HEAD AT TRANSOM
3" = 1'-0"

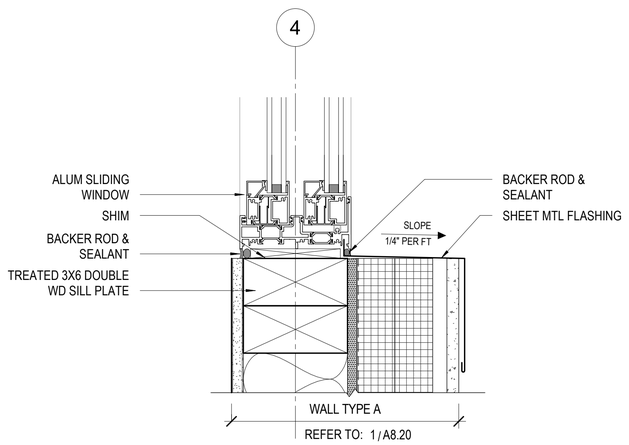

1 CLERESTORY WINDOW HEAD DETAIL
3" = 1'-0"

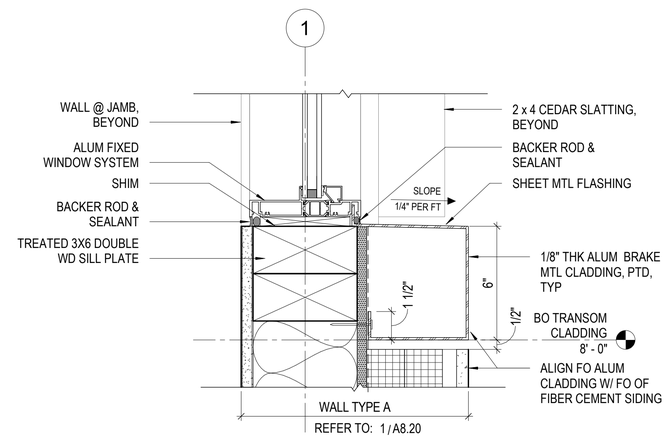

6 CLERESTORY SILL/FIXED WINDOW HEAD AT TRANSOM
3" = 1'-0"

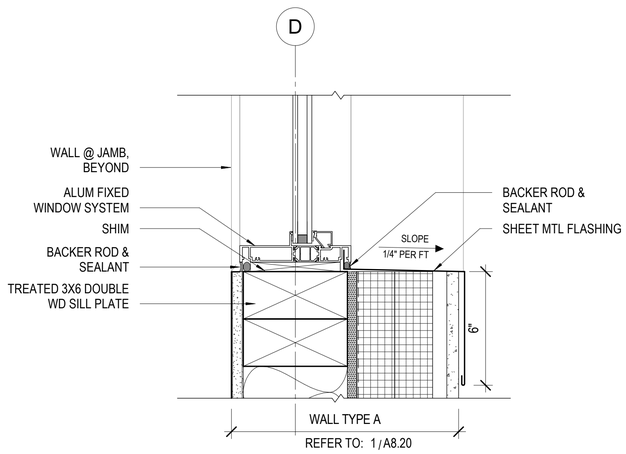

4 OPERABLE WINDOW SILL
3" = 1'-0"

7 FIXED WINDOW SILL
3" = 1'-0"

BUREAU OF ARCHITECTURE

SAN FRANCISCO PUBLIC WORKS

Ron Alameida - City Architect

Julia Laue - Principal Architect / Bureau Manager

49 S Van Ness Ave., Suite 1100, San Francisco, CA 94103
Phone (628)271-2865

Golden Gate Park Golf Clubhouse

970 47th Avenue
San Francisco, CA 94121

Consultant

95% CD 11.16.2020

No.	Date	Revisions

PM Noah Levy
PA Paul DeFreitas
Drawn Author
Checked Checker

NOT FOR CONSTRUCTION

Drawing Title

EXTERIOR WINDOW DETAILS

Sheet No.
A8.53

Scale: 3" = 1'-0"

Project No.
1804

Original Sheet Size: 22"x34"

C:\Users\eharriso\Documents\1804_GGP_GC_CLUBHOUSE_R18_eharriso.rvt
11/2/2020 6:17:15 PM

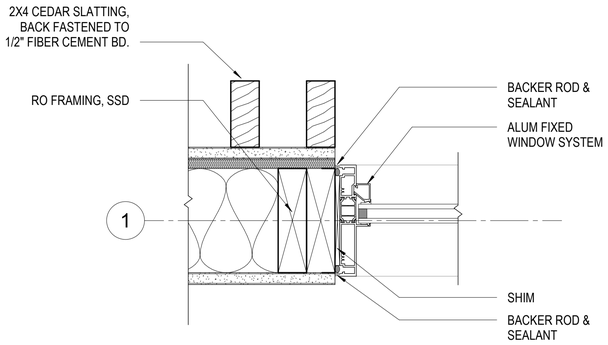

6 CLERESTORY WINDOW JAMB DETAIL AT SLATS
3" = 1'-0"

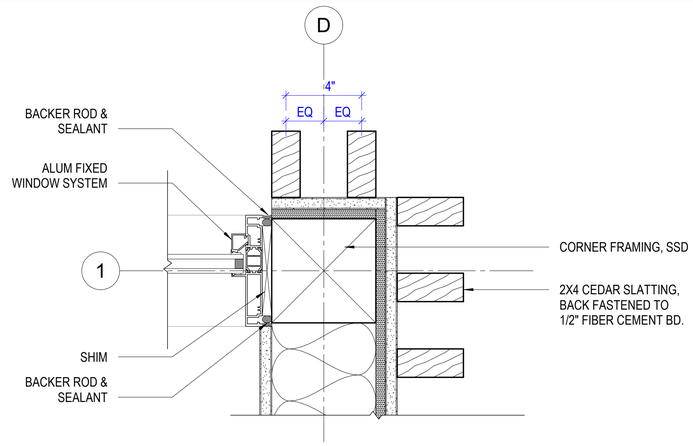

3 CLERESTORY WINDOW JAMB AT CORNER & SLATS
3" = 1'-0"

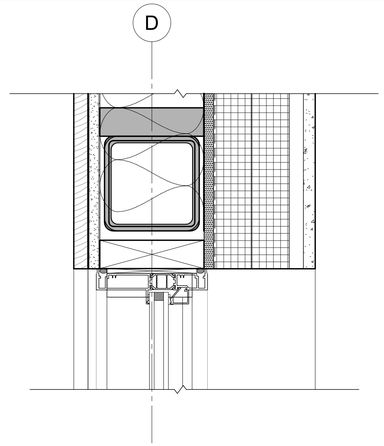

1 FIXED WINDOW JAMB DETAIL AT WALL
3" = 1'-0"

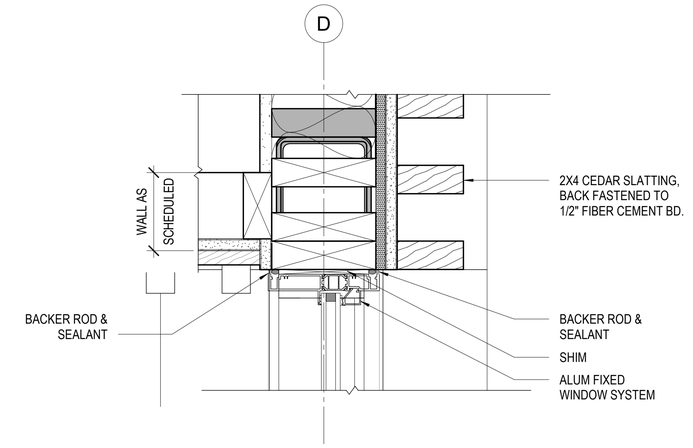

4 FIXED WINDOW JAMB DETAIL AT SLATS
3" = 1'-0"

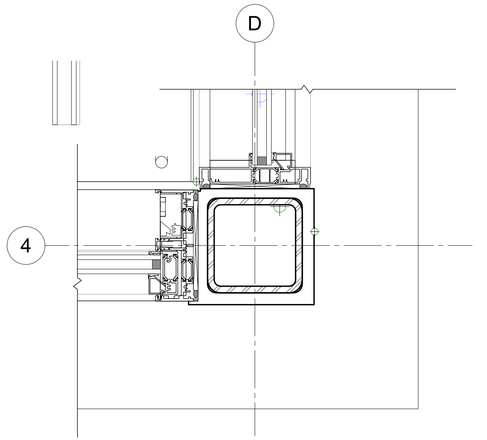

2 PLAN DETAIL AT FIXED & OPERABLE WINDOW CORNER
3" = 1'-0"

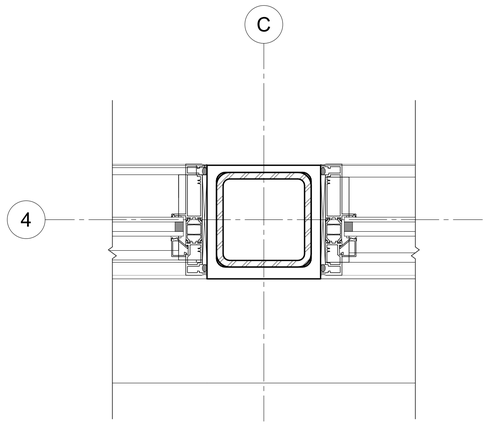

7 CLERESTORY WINDOW JAMB AT HSS COLUMN
3" = 1'-0"

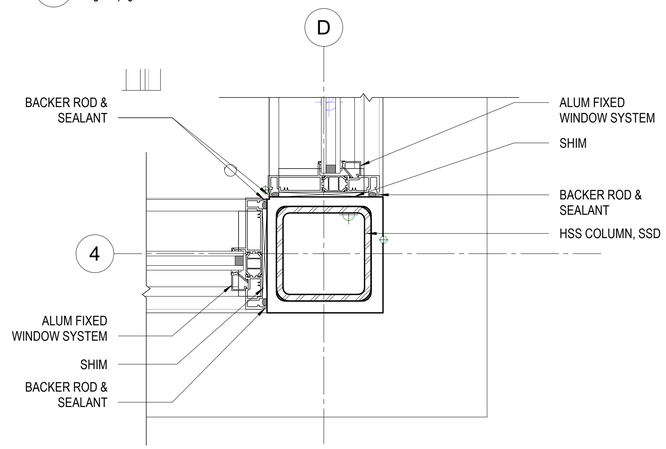

5 PLAN DETAIL AT CLERESTORY WINDOW CORNER
3" = 1'-0"

BUREAU OF ARCHITECTURE

SAN FRANCISCO PUBLIC WORKS

Ron Alameida - City Architect

Julia Laue - Principal Architect / Bureau Manager

49 S Van Ness Ave., Suite 1100, San Francisco, CA 94103
Phone (628)271-2865

Golden Gate Park Golf Clubhouse

970 47th Avenue
San Francisco, CA 94121

Consultant

95% CD 11.16.2020

No.	Date	Revisions

PM Noah Levy
PA Paul DeFreitas
Drawn Author
Checked Checker

NOT FOR CONSTRUCTION

Drawing Title

EXTERIOR WINDOW PLAN DETAILS

Sheet No.

A8.54

Scale: 3" = 1'-0"

Project No.

1804

Original Sheet Size: 22"x34"

C:\Users\eharriso\Documents\1804_GGP_GC_CLUBHOUSE_R18_eharriso.rvt
11/2/2020 6:17:17 PM

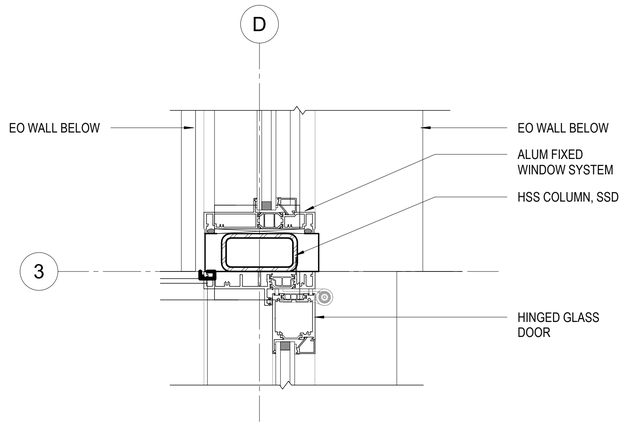

6 DOOR JAMB DETAIL AT FIXED WINDOW
3" = 1'-0"

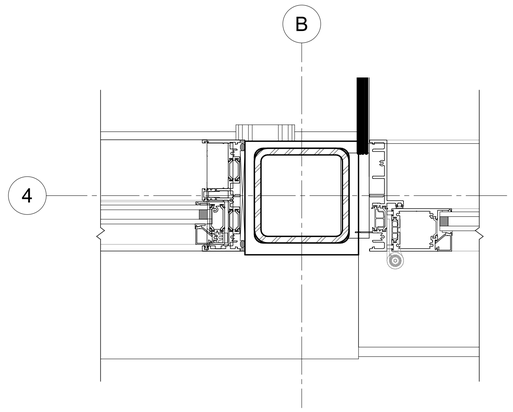

3 PATIO DOOR JAMB AT OPERABLE WINDOW
3" = 1'-0"

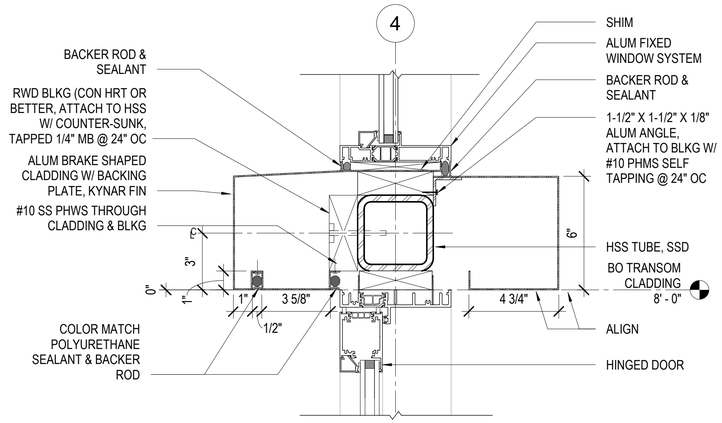

1 CLERESTORY SILL/DOOR HEAD AT TRANSOM BEAM
3" = 1'-0"

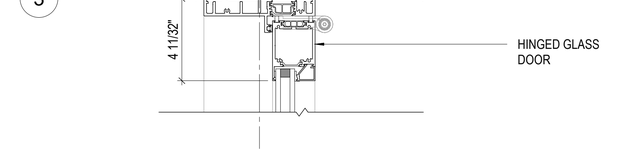

7 DOOR JAMB DETAIL AT WALL
3" = 1'-0"

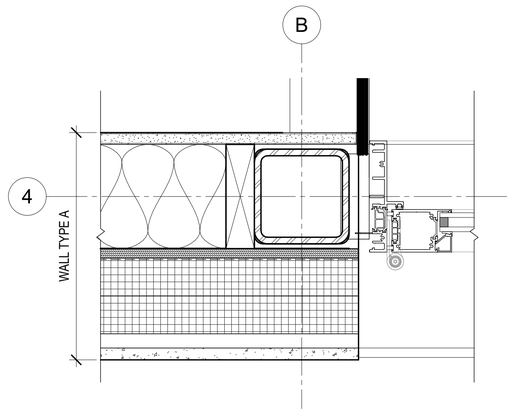

4 PATIO DOOR JAMB AT HSS COLUMN
3" = 1'-0"

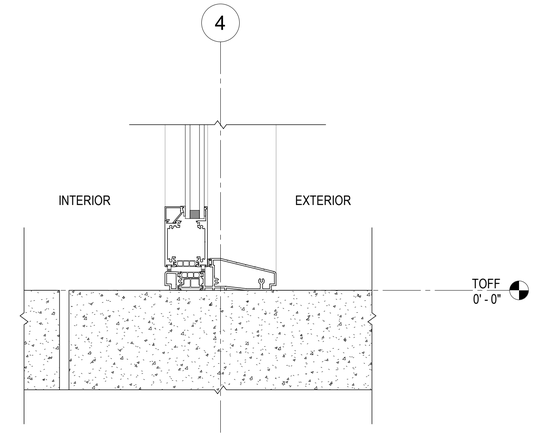

2 DOOR THRESHOLD DETAIL
3" = 1'-0"

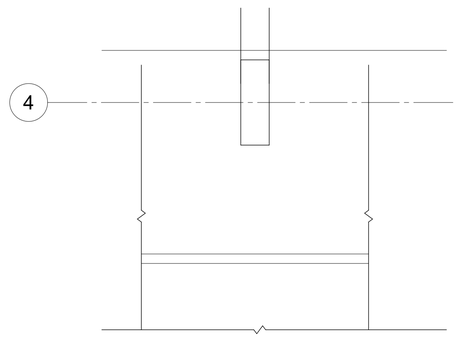

5 PATIO DOOR PLAN DETAIL AT VERTICAL MULLION
3" = 1'-0"

BUREAU OF ARCHITECTURE

SAN FRANCISCO PUBLIC WORKS

Ron Alameida - City Architect

Julia Laue - Principal Architect / Bureau Manager

49 S Van Ness Ave., Suite 1100, San Francisco, CA 94103
Phone (628)271-2865

Golden Gate Park Golf Clubhouse

970 47th Avenue
San Francisco, CA 94121

Consultant

95% CD 11.16.2020

No.	Date	Revisions

PM Noah Levy
PA Paul DeFreitas
Drawn JL
Checked Checker

NOT FOR CONSTRUCTION

Drawing Title

EXTERIOR DOOR DETAILS

Sheet No.

A8.60

Scale: 3" = 1'-0"

Project No.

1804

Original Sheet Size: 22"x34"

C:\Users\eharriso\Documents\1804_GGP_GC_CLUBHOUSE_R18_eharriso.rvt
11/2/2020 6:17:20 PM

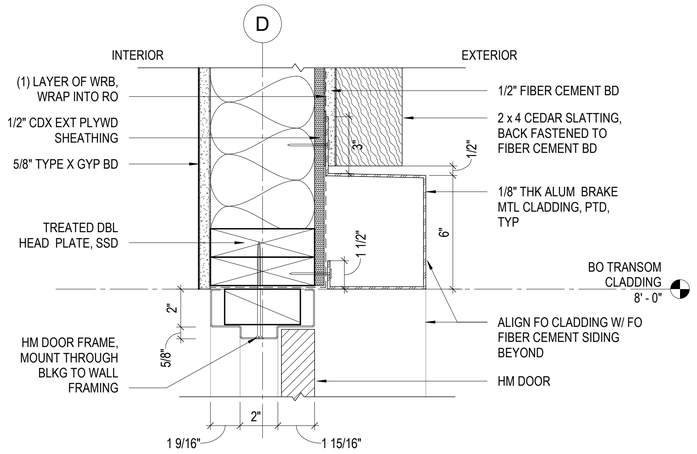

4 HEAD DETAIL AT HOLLOW METAL DOOR & SLATTING

3" = 1'-0"

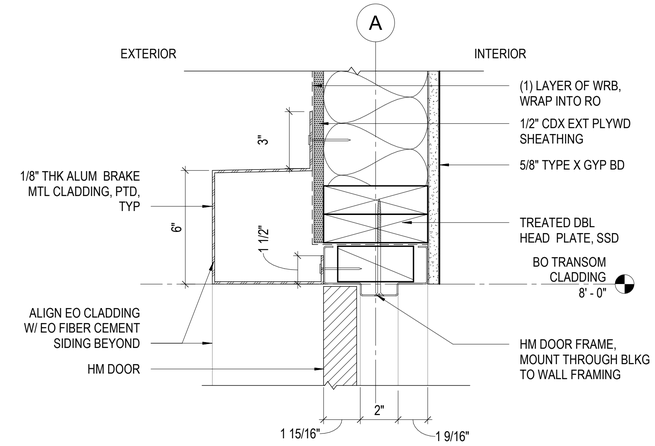

1 HEAD DETAIL AT HOLLOW METAL DOOR & LOUVER

3" = 1'-0"

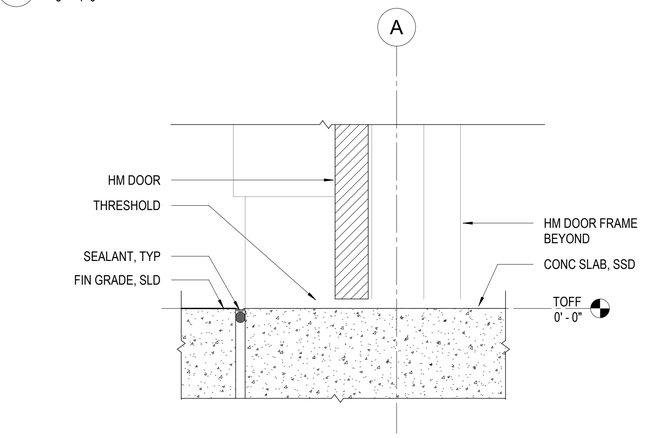

2 THRESHOLD AT HOLLOW METAL DOOR

3" = 1'-0"

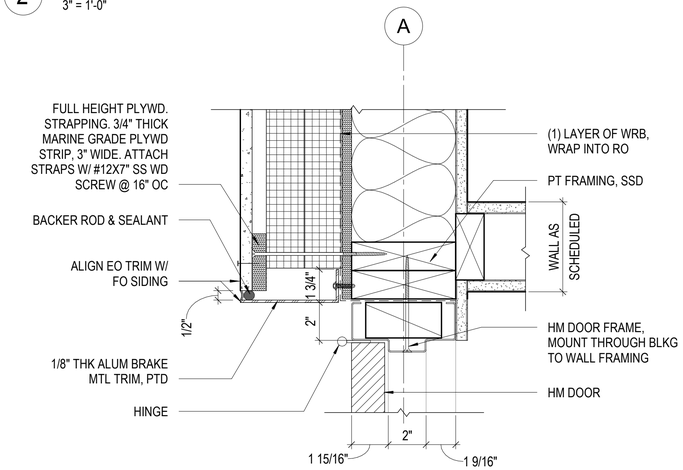

3 JAMB DETAIL AT HOLLOW METAL DOOR

3" = 1'-0"

BUREAU OF ARCHITECTURE

SAN FRANCISCO PUBLIC WORKS

Ron Alameida - City Architect

Julia Laue - Principal Architect / Bureau Manager

49 S Van Ness Ave., Suite 1100, San Francisco, CA 94103
Phone (628)271-2865

Golden Gate Park Golf Clubhouse

970 47th Avenue
San Francisco, CA 94121

Consultant

95% CD 11.16.2020

No.	Date	Revisions

PM
PA Noah Levy
Drawn Paul DeFreitas
Checked JL
Checker

NOT FOR CONSTRUCTION

Drawing Title

EXTERIOR DOOR DETAILS

Sheet No.

A8.61

Scale: 3" = 1'-0"

Project No.

1804

Original Sheet Size: 22"x34"

C:\Users\eharriso\Documents\1804_GGP_GC_CLUBHOUSE_R18_eharriso.rvt
11/2/2020 6:17:21 PM

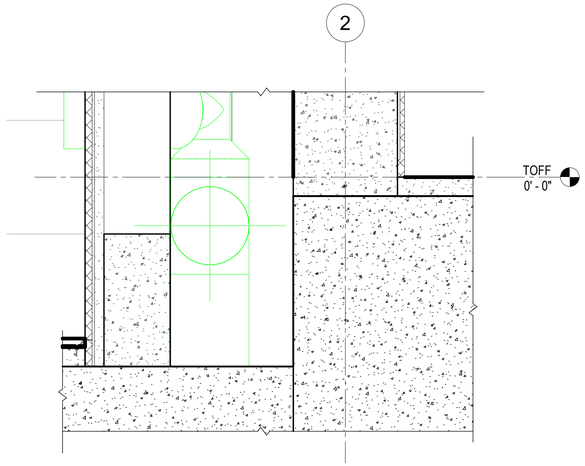

4 SLAB ELEVATION CHANGE AT RESTROOM
3" = 1'-0"

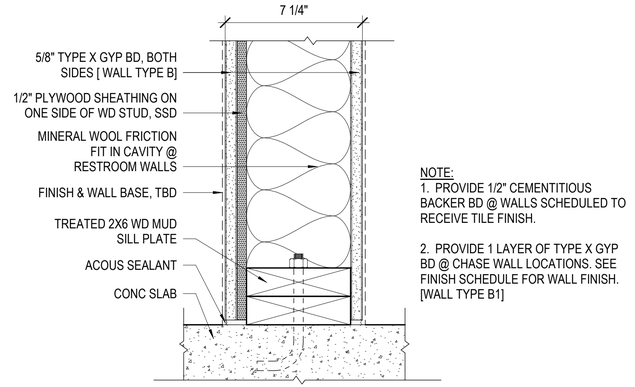

NOTE:
1. PROVIDE 1/2" CEMENTITIOUS BACKER BD @ WALLS SCHEDULED TO RECEIVE TILE FINISH.

2. PROVIDE 1 LAYER OF TYPE X GYP BD @ CHASE WALL LOCATIONS. SEE FINISH SCHEDULE FOR WALL FINISH. [WALL TYPE B1]

1 WALL TYPE B - INTERIOR SHEAR WALL
3" = 1'-0"

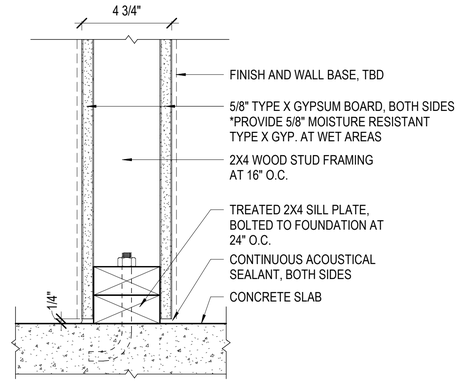

2 WALL TYPE C - INTERIOR PARTITION
3" = 1'-0"

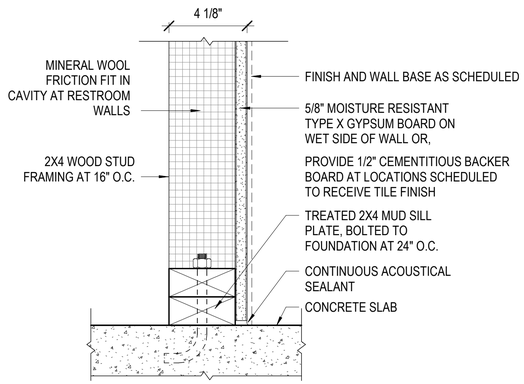

3 WALL TYPE D - CHASE WALL
3" = 1'-0"

BUREAU OF ARCHITECTURE

SAN FRANCISCO PUBLIC WORKS

Ron Alameida - City Architect

Julia Laue - Principal Architect / Bureau Manager

49 S Van Ness Ave., Suite 1100, San Francisco, CA 94103
Phone (628)271-2865

Golden Gate Park Golf Clubhouse

970 47th Avenue
San Francisco, CA 94121

Consultant

95% CD 11.16.2020

No.	Date	Revisions

PM Noah Levy
PA Paul DeFreitas
Drawn Author
Checked Checker

NOT FOR CONSTRUCTION

Drawing Title

PARTITION SCHEDULE, PARTITION DETAILS

Sheet No.

A9.10

Scale: 3" = 1'-0"

Project No.

1804

Original Sheet Size: 22"x34"

C:\Users\eharriso\Documents\1804_GGP_GC_CLUBHOUSE_R18_eharriso.rvt
11/2/2020 6:17:22 PM

DOOR SCHEDULE

DOOR NUMBER	DESCRIPTION	DOOR TYPE	DOOR					FRAME					HDWR GROUP	SIGNAGE	COMMENTS
			MATERIAL	FINISH	SIZE			MATERIAL	FINISH	DETAIL					
					WIDTH	HEIGHT	THICKNESS			HEAD	JAMB	THRESHOLD			
101A	EXTERIOR ALUM FRAME GLASS DOOR	A	ALUM/GLASS		7' - 7 11/16"	7' - 10 1/2"	0' - 1 3/4"	ALUM		1/A8.60	3/A8.60, 4/A8.60, 5/A8.60	2/A8.60			
101B	EXTERIOR ALUM FRAME GLASS DOOR	A	ALUM/GLASS		7' - 7 11/16"	7' - 10 1/2"	0' - 1 3/4"	ALUM		1/A8.60	3/A8.60, 4/A8.60, 5/A8.60	2/A8.60			
101C	EXTERIOR ALUM FRAME GLASS DOOR	B	ALUM/GLASS		5' - 11"	7' - 10 1/2"	0' - 1 3/4"	ALUM		1/A8.60	6/A8.60, 7/A8.60	2/A8.60			
101D		52			0' - 0"	0' - 0"									
104	FLUSH DOOR	C	HM		3' - 0"	7' - 0"	0' - 2"	HM							
106	EXTERIOR FLUSH DOOR	F	HM		3' - 4"	8' - 0"	0' - 2"	HM		1/A8.61	3/A8.61	2/A8.61			
107	FOUR PANEL BI-FOLD DOOR	E	WOOD		6' - 0"	7' - 10"	0' - 1 1/2"	WOOD							
108		63			3' - 0"	7' - 10"	0' - 2"	WOOD							SIDELITE
109	EXTERIOR FLUSH DOOR	F	HM		3' - 4"	8' - 9"	0' - 2"	HM		4/A8.61	3/A8.61	2/A8.61			
109A	FLUSH DOOR	C	HM		3' - 0"	7' - 0"	0' - 2"	HM							
109B	FLUSH DOOR	C	HM		2' - 6"	7' - 0"	0' - 2"	HM							
109C	FLUSH DOOR	C	HM		2' - 6"	7' - 0"	0' - 2"	HM							
109D	FLUSH DOOR	C	HM		2' - 6"	7' - 0"	0' - 2"	HM							
110	FLUSH DOOR	C	HM		3' - 0"	7' - 0"	0' - 2"	HM							
111	FLUSH DOOR	C	HM		2' - 6"	7' - 0"	0' - 2"	HM							
113	EXTERIOR SLATTED PAIR GATE	G	CEDAR SLATTING		6' - 0"	7' - 0"	0' - 2"								
114	EXTERIOR SLATTED PAIR GATE	G	CEDAR SLATTING		6' - 0"	7' - 0"	0' - 2"								

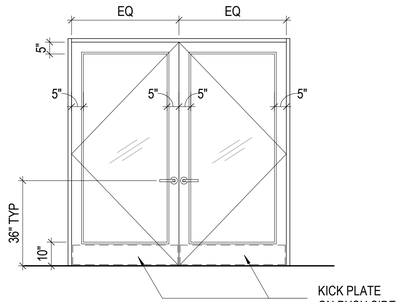

TYPE A

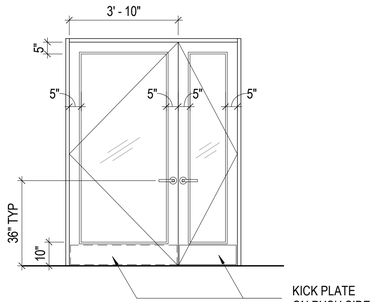

TYPE B

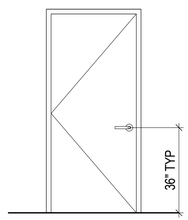

TYPE C

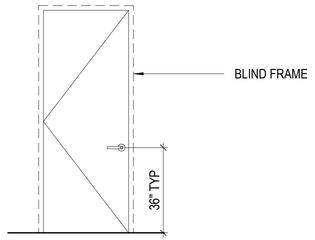

TYPE D

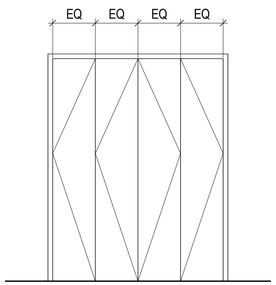

TYPE E

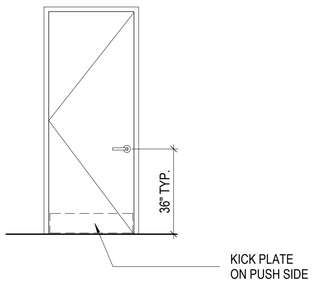

TYPE F

DOOR TYPE LEGEND

3/8" = 1'-0"

BUREAU OF ARCHITECTURE

SAN FRANCISCO PUBLIC WORKS

Ron Alameida - City Architect

Julia Laue - Principal Architect / Bureau Manager

49 S Van Ness Ave., Suite 1100, San Francisco, CA 94103
Phone (628)271-2865

Golden Gate Park Golf Clubhouse

970 47th Avenue
San Francisco, CA 94121

Consultant

95% CD 11.16.2020

No.	Date	Revisions

PM Noah Levy
PA Paul DeFreitas
Drawn Author
Checked Checker

NOT FOR CONSTRUCTION

Drawing Title

DOOR SCHEDULE AND OTHER INTERIOR OPENINGS

Sheet No.

A9.40

Scale: 3/8" = 1'-0"

Project No.

1804

Original Sheet Size: 22"x34"

C:\Users\eharriso\Documents\1804_GGP_GC_CLUBHOUSE_R18_eharriso.rvt
11/12/2020 6:17:25 PM

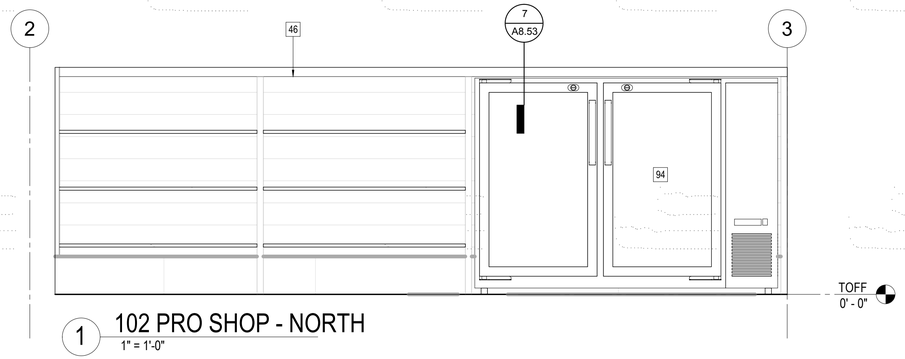

1 102 PRO SHOP - NORTH
1" = 1'-0"

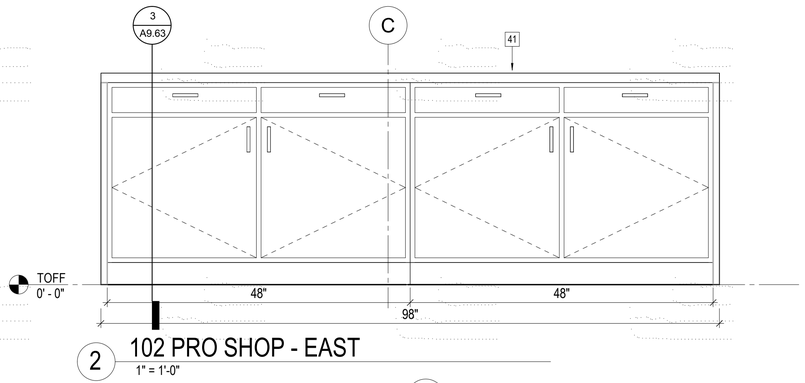

2 102 PRO SHOP - EAST
1" = 1'-0"

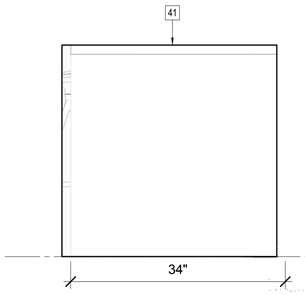

3 102 PRO SHOP - SOUTH
1" = 1'-0"

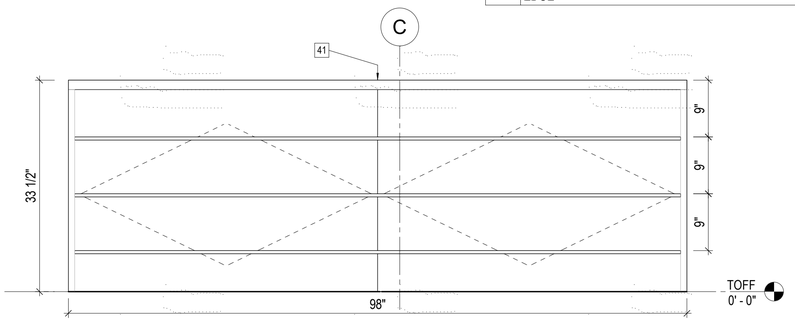

5 101 RETAIL/DINING WEST
1" = 1'-0"

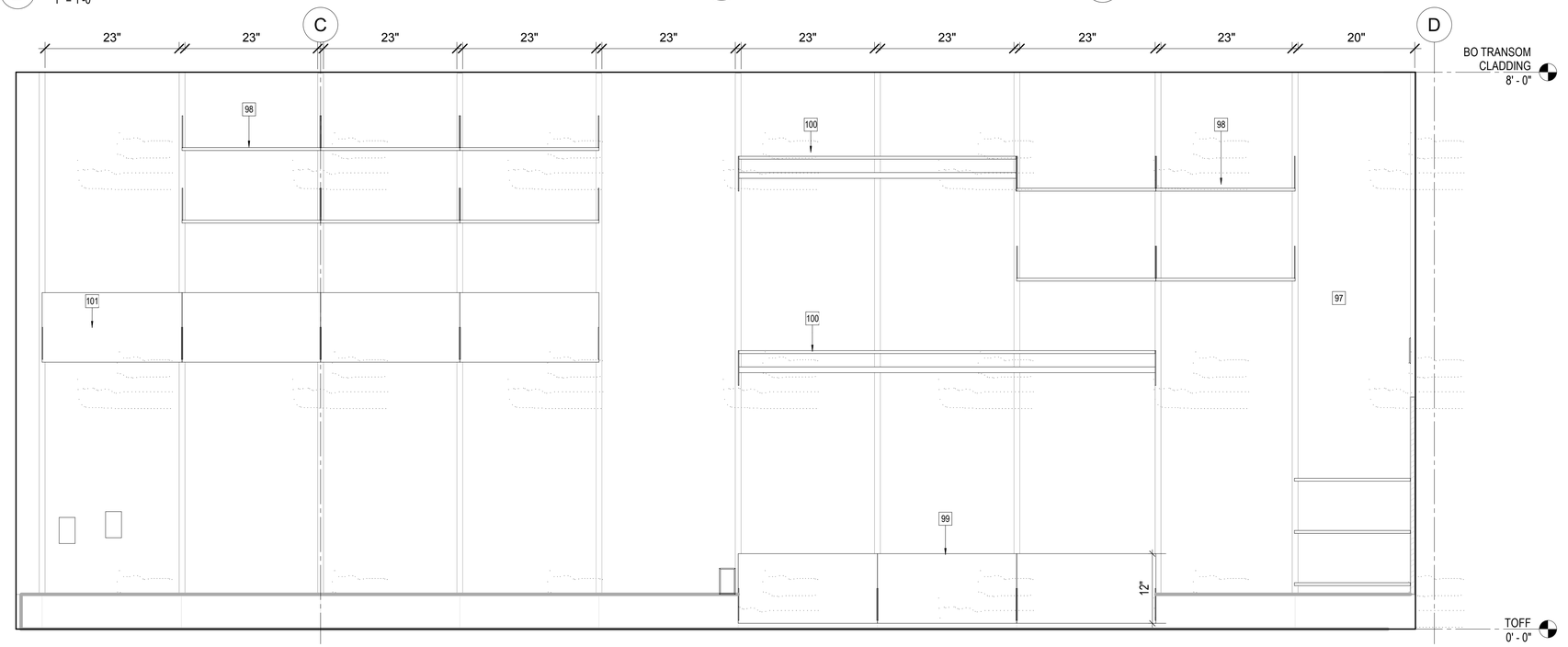

4 102 PRO SHOP - WEST
1" = 1'-0"

KEY NOTE LEGEND

41	RETAIL ISLAND - QUARTZ COUNTER O/ CUSTOM WOOD BASE CABINETS, WATERFALL EDGE
46	QUARTZ COUNTERTOP O/ WOOD BASE W/ OPEN STORAGE SHELVING
94	UNDERCOUNTER BEVERAGE REFRIGERATOR
97	ELECTRIFIED ADJUSTABLE MAGNETIC WALL PANEL SHELVING SYSTEM
98	CONFIGURABLE SHELVES
99	CONFIGURABLE CABINETS
100	CONFIGURABLE SHELVES W/ HANGING RACK
101	QUARTZ COUNTERTOP O/ WOOD BASE, WATERFALL EDGE

BUREAU OF ARCHITECTURE

SAN FRANCISCO PUBLIC WORKS

Ron Alameida - City Architect

Julia Laue - Principal Architect / Bureau Manager

49 S Van Ness Ave., Suite 1100, San Francisco, CA 94103
Phone (628)271-2865

Golden Gate Park Golf Clubhouse

970 47th Avenue
San Francisco, CA 94121

Consultant

95% CD 11.16.2020

No.	Date	Revisions

PM Noah Levy
PA Paul DeFreitas
Drawn Author
Checked Checker

NOT FOR CONSTRUCTION

Drawing Title

CASEWORK & MILLWORK DETAILS - PRO SHOP

Sheet No.

A9.61

Scale: 1" = 1'-0"

Project No.

1804

C:\Users\eharriso\Documents\1804_GGP_GC_CLUBHOUSE_R18_eharriso.rvt
11/2/2020 6:17:29 PM

Original Sheet Size: 22"x34"

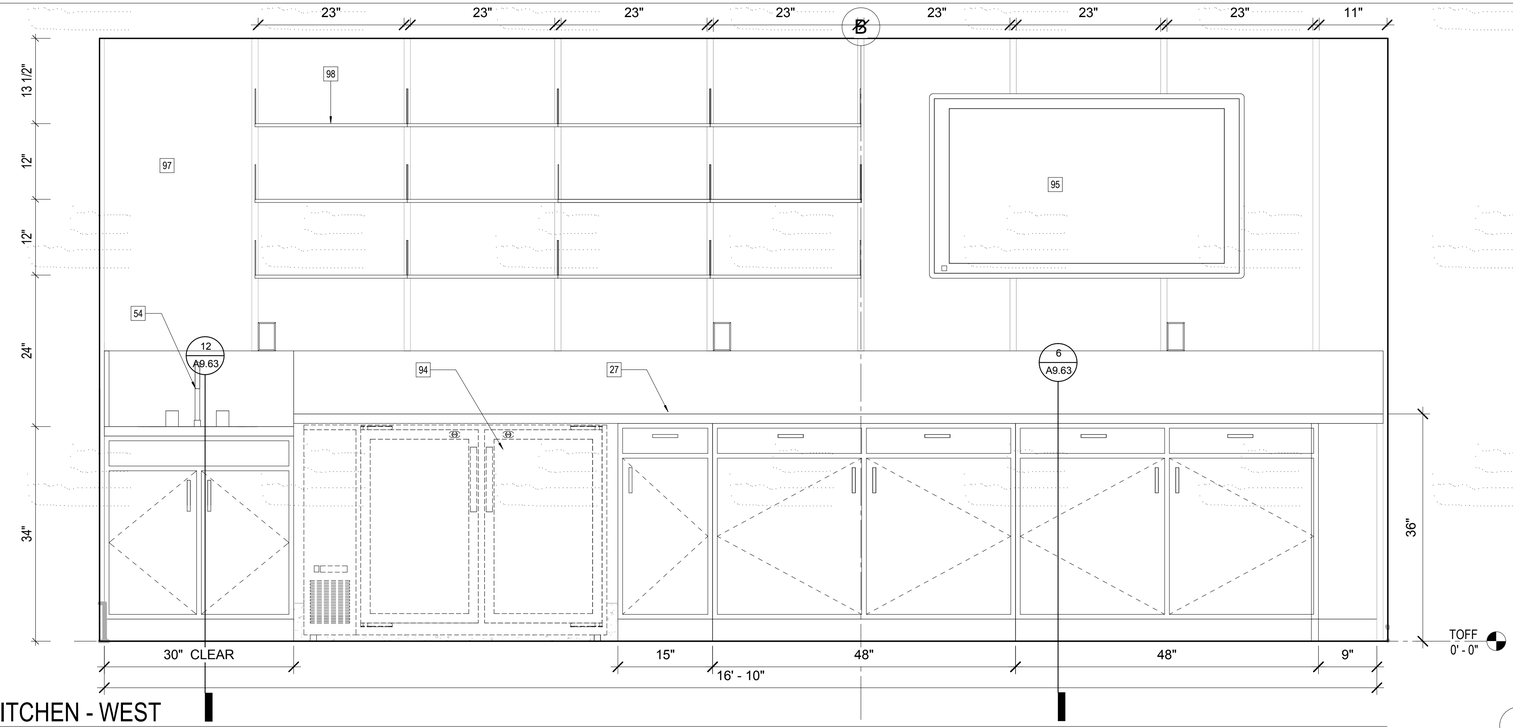

2 103 KITCHEN - WEST
1" = 1'-0"

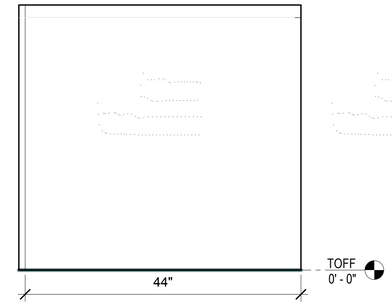

1 103 KITCHEN - SOUTH
1" = 1'-0"

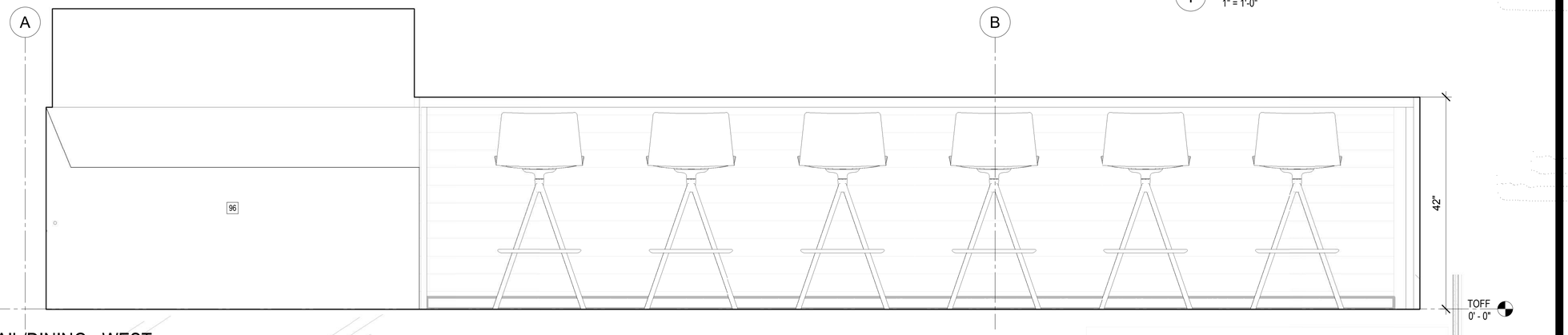

3 101 RETAIL/DINING - WEST
1" = 1'-0"

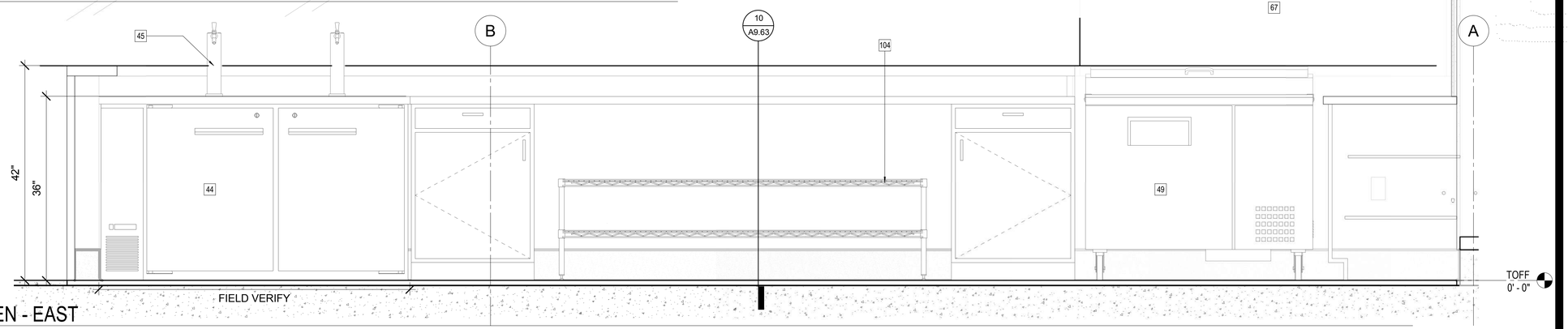

4 103 KITCHEN - EAST
1" = 1'-0"

KEY NOTE LEGEND

27	QUARTZ COUNTER W/ WOOD BASE CABINETS
44	TWO KEG REFRIGERATOR, UNDERCOUNTER
45	TWO TAP HANDLE FOR KEG - MOUNT IN COUNTERTOP
49	REFRIGERATED SANDWICH PREP STATION
54	SS HANDWASH SINK W/ SIDE SPLASH GUARDS, DROP INTO COUNTERTOP
67	GLASS SNEEZE GUARD ON COUNTER
94	UNDERCOUNTER BEVERAGE REFRIGERATOR
95	50" FLAT SCREEN TV, NIC
96	BUILT-IN WOOD BANQUETTE
97	ELECTRIFIED ADJUSTABLE MAGNETIC WALL PANEL SHELVING SYSTEM
98	CONFIGURABLE SHELVES
104	NON-FIXED METRO WIRE SHELVING RACK, 2 TIER

BUREAU OF ARCHITECTURE

SAN FRANCISCO PUBLIC WORKS

Ron Alameida - City Architect

Julia Laue - Principal Architect / Bureau Manager

49 S Van Ness Ave., Suite 1100, San Francisco, CA 94103
Phone (628)271-2865

Golden Gate Park Golf Clubhouse

970 47th Avenue
San Francisco, CA 94121

Consultant

95% CD 11.16.2020

No.	Date	Revisions

PM Noah Levy
PA Paul DeFreitas
Drawn Author
Checked Checker

NOT FOR CONSTRUCTION

Drawing Title

CASEWORK & MILLWORK DETAILS - KITCHEN

Sheet No. A9.62

Scale: 1" = 1'-0"

Project No. 1804

Original Sheet Size: 22"x34"

C:\Users\eharriso\Documents\1804_GGP_GC_CLUBHOUSE_R18_eharriso.rvt
11/2/2020 6:17:35 PM

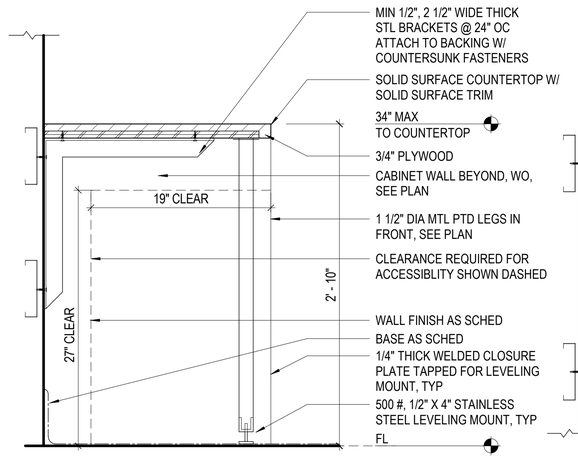

10 ACCESSIBLE WORK SURFACE

1 1/2" = 1'-0"

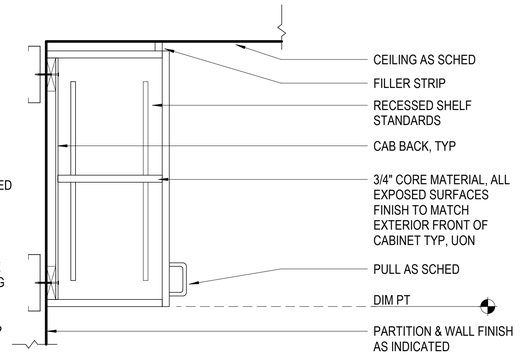

7 WALL CABINET AT CEILING

1 1/2" = 1'-0"

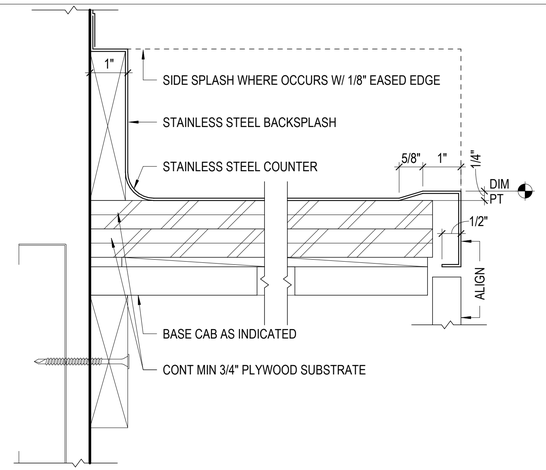

4 COUNTER EDGE - SS

6" = 1'-0"

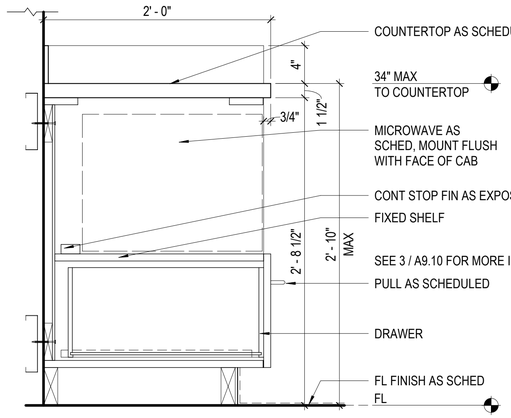

11 BASE CABINET - MICROWAVE

1 1/2" = 1'-0"

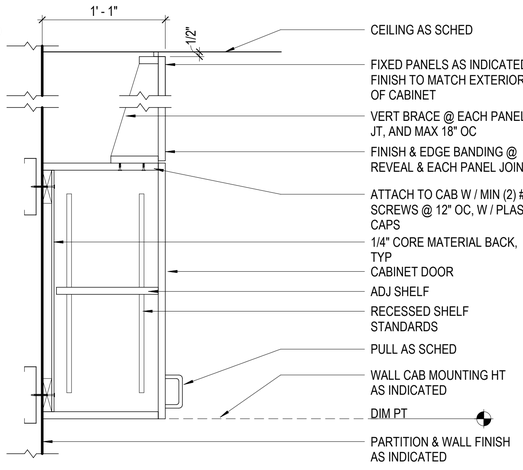

8 WALL CABINET AT SOFFIT

1 1/2" = 1'-0"

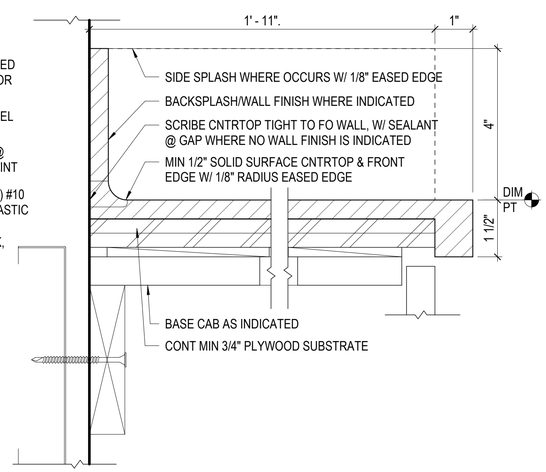

5 COUNTER EDGE - OPT 1

6" = 1'-0"

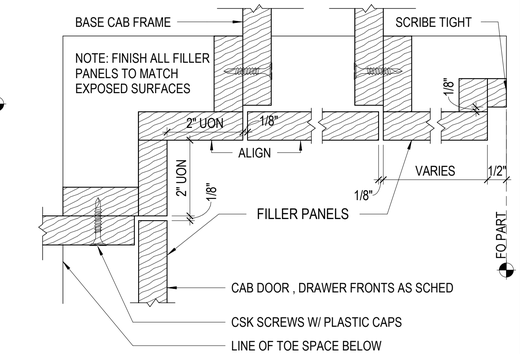

2 BASE CABINET - FILLER PANEL

6" = 1'-0"

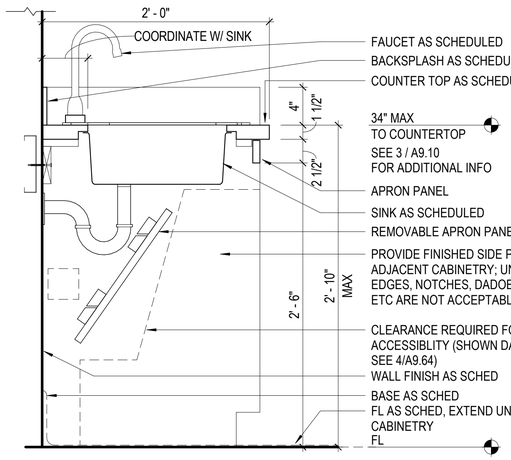

12 BASE CABINET - SINK

1 1/2" = 1'-0"

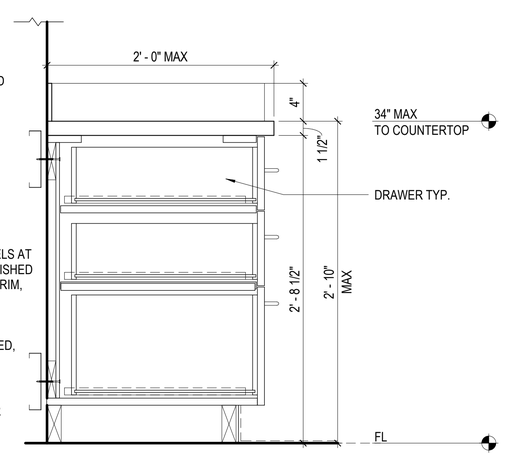

9 BASE CABINET - THREE DRAWERS

1 1/2" = 1'-0"

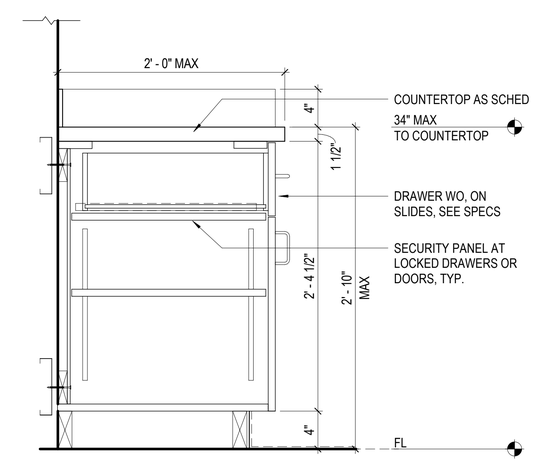

6 BASE CABINET - ONE DRAWER/CABINET

1 1/2" = 1'-0"

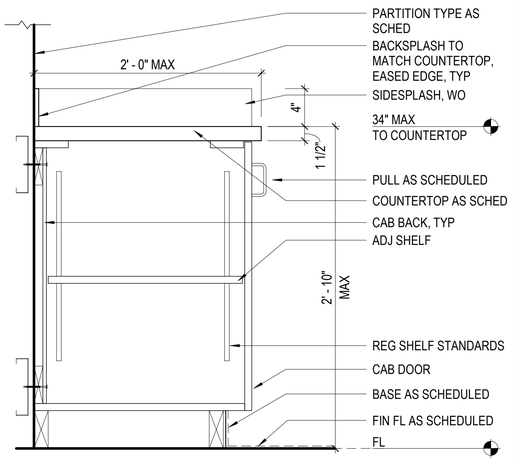

3 BASE CABINET - ONE CABINET

1 1/2" = 1'-0"

CASEWORK GENERAL NOTES

1. REFER TO INTERIOR ELEVATIONS AND SPECIFICATIONS FOR CASEWORK REQUIREMENTS.
2. COORDINATE CASEWORK WITH MECHANICAL, PLUMBING, AND ELECTRICAL DRWGS.
3. COORDINATE ALL BACKING REQUIRED FOR CASEWORK INSTALLATION.
4. LEGEND:
   CS = CONCEALED SUPPORT — CP = CLOSURE PANEL
   IS = INTERMEDIATE SUPPORT — FP = FILLER PANEL
5. PROVIDE BACKSPLASH ON WALL BEHIND SINK AND SIDESPLASH WHERE COUNTERTOPS MEET SIDE WALLS, UON.
6. PROVIDE LOCKS ON CASEWORK WHERE SHOWN ON ELEVATIONS, TYP.
7. ALL STANDARD CASEWORK (PLASTIC LAMINATE) (WOOD VENEER) FINISH, UON.
8. FIELD VERIFY ALL DIMENSIONS AND PLUMBNESS OF WALLS PRIOR TO FABRICATING CASEWORK.
9. CASEWORK TYPES SHALL MEET SEISMIC FORCE REQUIREMENTS OF TITLE 24, CALIFORNIA CODE OF REGULATIONS.
10. SEAMS IN CLOSURE PANEL ABOVE UPPER CASEWORK TO LINE UP W/ CASEWORK DOORS.
11. ALL PLUMBING (INCLUDING GARBAGE DISPOSAL) MUST BE INSTALLED TO MAINTAIN CLEAR KNEE SPACE, SEE 4/A9.64
12. PROVIDE PLYWOOD TEMPLATE OF REQUIRED KNEE SPACE CLEARANCE FOR ON-SITE INSPECTION & VERIFICATION, SEE 4/9.64

BUREAU OF ARCHITECTURE

SAN FRANCISCO PUBLIC WORKS

Ron Alameida - City Architect

Julia Laue - Principal Architect / Bureau Manager

30 Van Ness Ave., Suite 4100, San Francisco, CA 94102
Fax (415)557-4701, Phone (415)557-4700

Golden Gate Park Golf Clubhouse

970 47th Avenue
San Francisco, CA 94121

Consultant

FOR DBI USE ONLY

Project Status 11.16.2020

No.	Date	Revisions

PM Noah Levy
PA Paul DeFreitas
Drawn Author
Checked Checker

NOT FOR CONSTRUCTION

Drawing Title

CASEWORK STANDARD DETAILS

Sheet No. A9.63

Scale: As indicated

Project No. 1804

Original Sheet Size: 22"x34"

C:\Users\eharriso\Documents\1804_GGP_GC_CLUBHOUSE_R18_eharriso.rvt
11/12/2020 6:17:36 PM

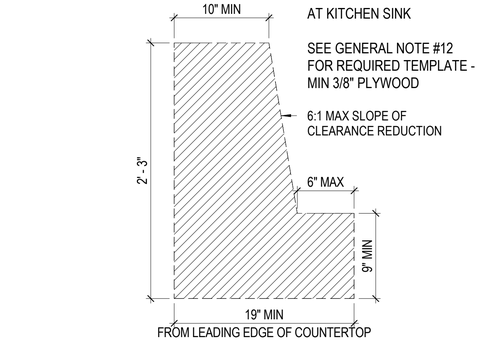

4 KNEE CLEARANCE
1 1/2" = 1'-0"

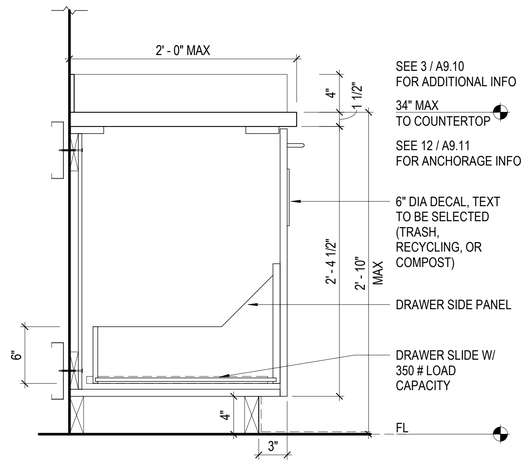

1 BASE CABINET - TRASH DRAWER
1 1/2" = 1'-0"

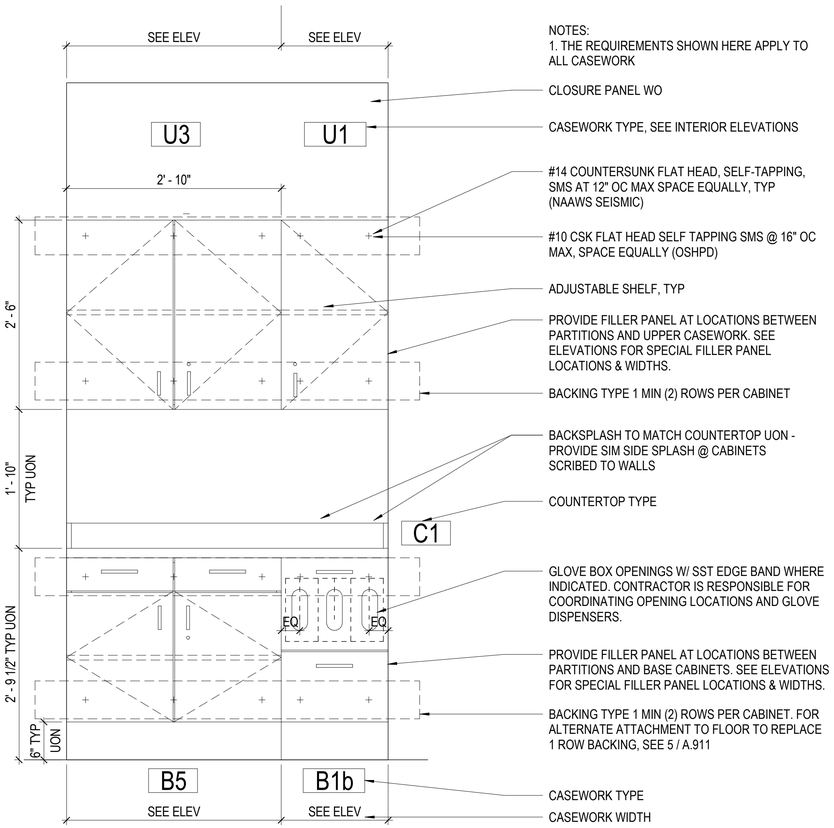

12 ELEVATION AT TYP. CASEWORK
1" = 1'-0"

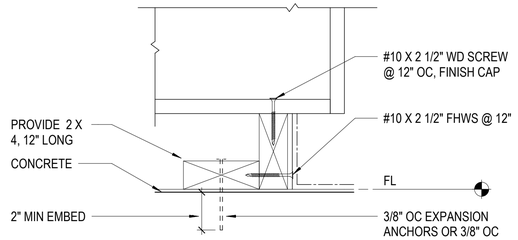

5 ALTERNATE ANCHORAGE
3" = 1'-0"

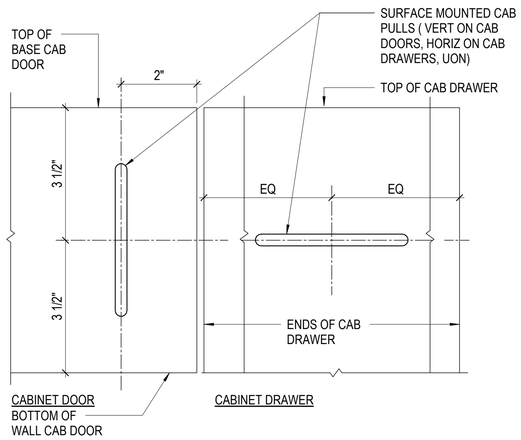

6 CABINET PULL LOCATION DIAGRAM
6" = 1'-0"

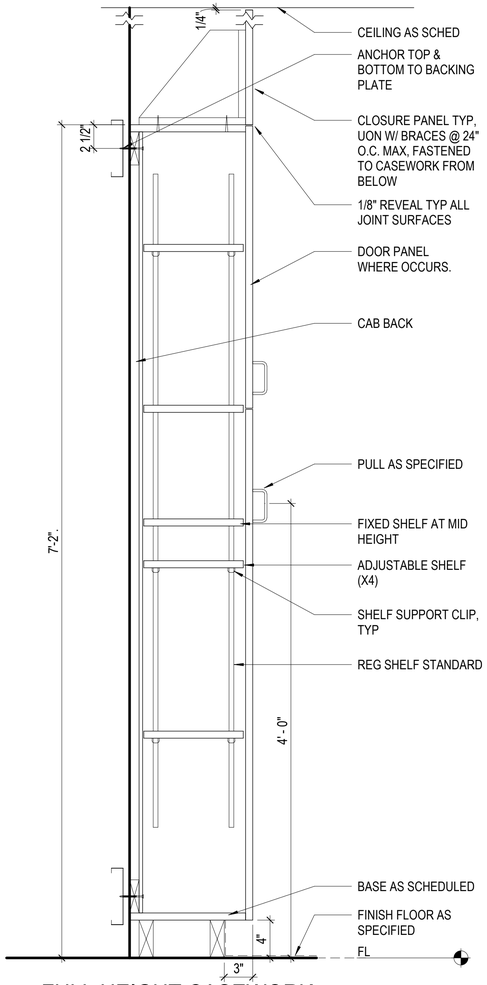

3 FULL HEIGHT CASEWORK
1 1/2" = 1'-0"

BUREAU OF ARCHITECTURE

SAN FRANCISCO PUBLIC WORKS

Ron Alameida - City Architect

Julia Laue - Principal Architect / Bureau Manager

30 Van Ness Ave., Suite 4100, San Francisco, CA 94102
Fax (415)557-4701, Phone (415)557-4700

Golden Gate Park Golf Clubhouse

970 47th Avenue
San Francisco, CA 94121

Consultant

FOR DBI USE ONLY

Project Status 11.16.2020

No.	Date	Revisions

PM
PA Noah Levy
Drawn Paul DeFreitas
Checked Author
Checker

NOT FOR CONSTRUCTION

Drawing Title

CASEWORK STANDARD DETAILS

Sheet No.

A9.64

Scale: As indicated

Project No.

1804

Original Sheet Size: 22"x34"

C:\Users\eharriso\Documents\1804_GGP_GC_CLUBHOUSE_R18_eharriso.rvt
11/2/2020 6:17:37 PM

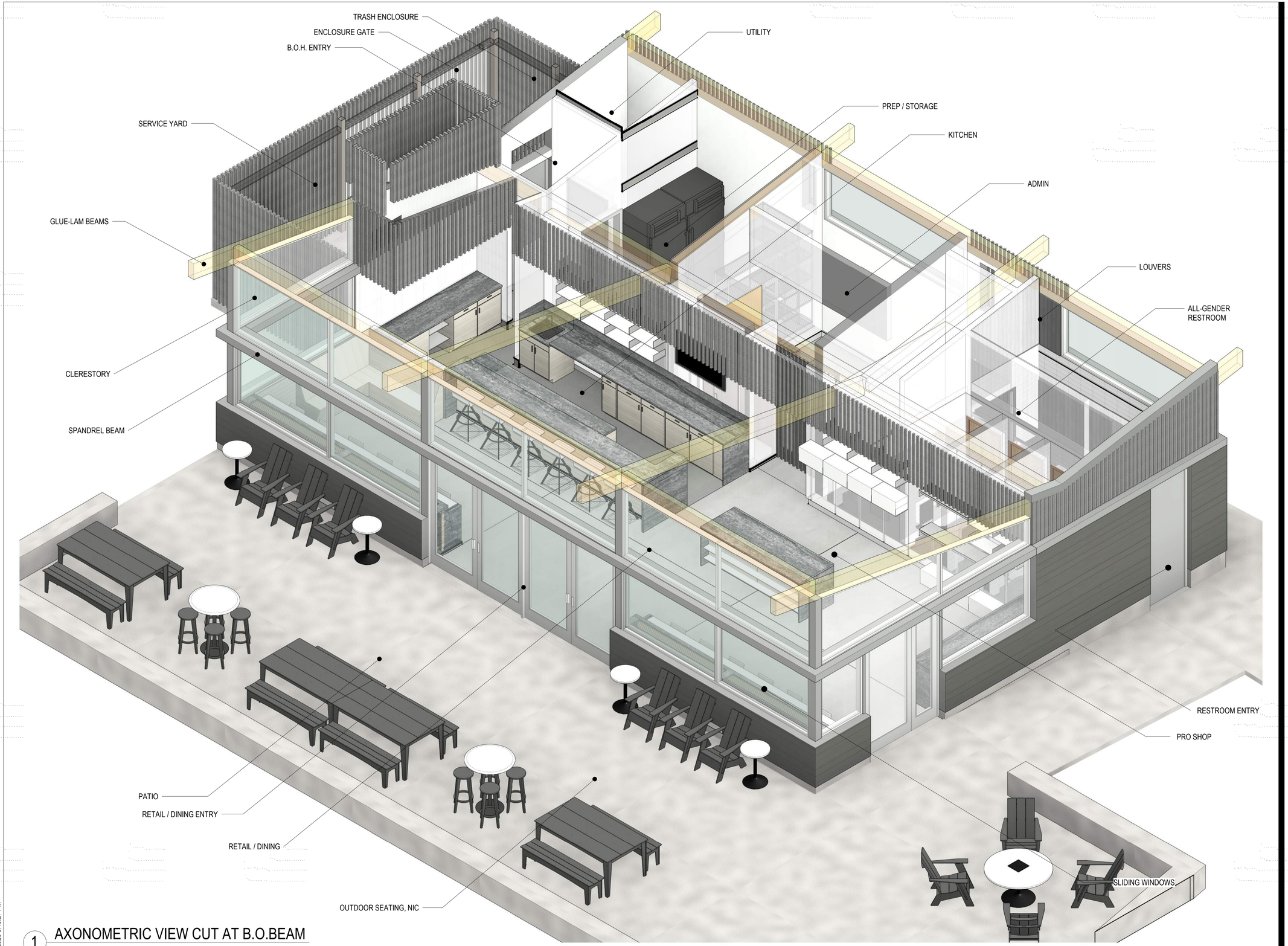

1 AXONOMETRIC VIEW CUT AT B.O.BEAM

C:\Users\eharriso\Documents\1804_GGP_GC_CLUBHOUSE_R18_eharriso.rvt
11/22/2020 6:16:27 PM

Original Sheet Size: 22"x34"

BUREAU OF ARCHITECTURE

SAN FRANCISCO PUBLIC WORKS

Ron Alameida - City Architect
Julia Laue - Principal Architect / Bureau Manager
49 S Van Ness Ave., Suite 1100, San Francisco, CA 94103
Phone (628)271-2865

Golden Gate Park Golf Clubhouse

970 47th Avenue
San Francisco, CA 94121

Consultant

95% CD 11.16.2020

No.	Date	Revisions

PM Noah Levy
PA Paul DeFreitas
Drawn Author
Checked Checker

NOT FOR CONSTRUCTION

Drawing Title

PROGRAM AXONOMETRIC

Sheet No.
A11.00

Scale:

Project No.
1804

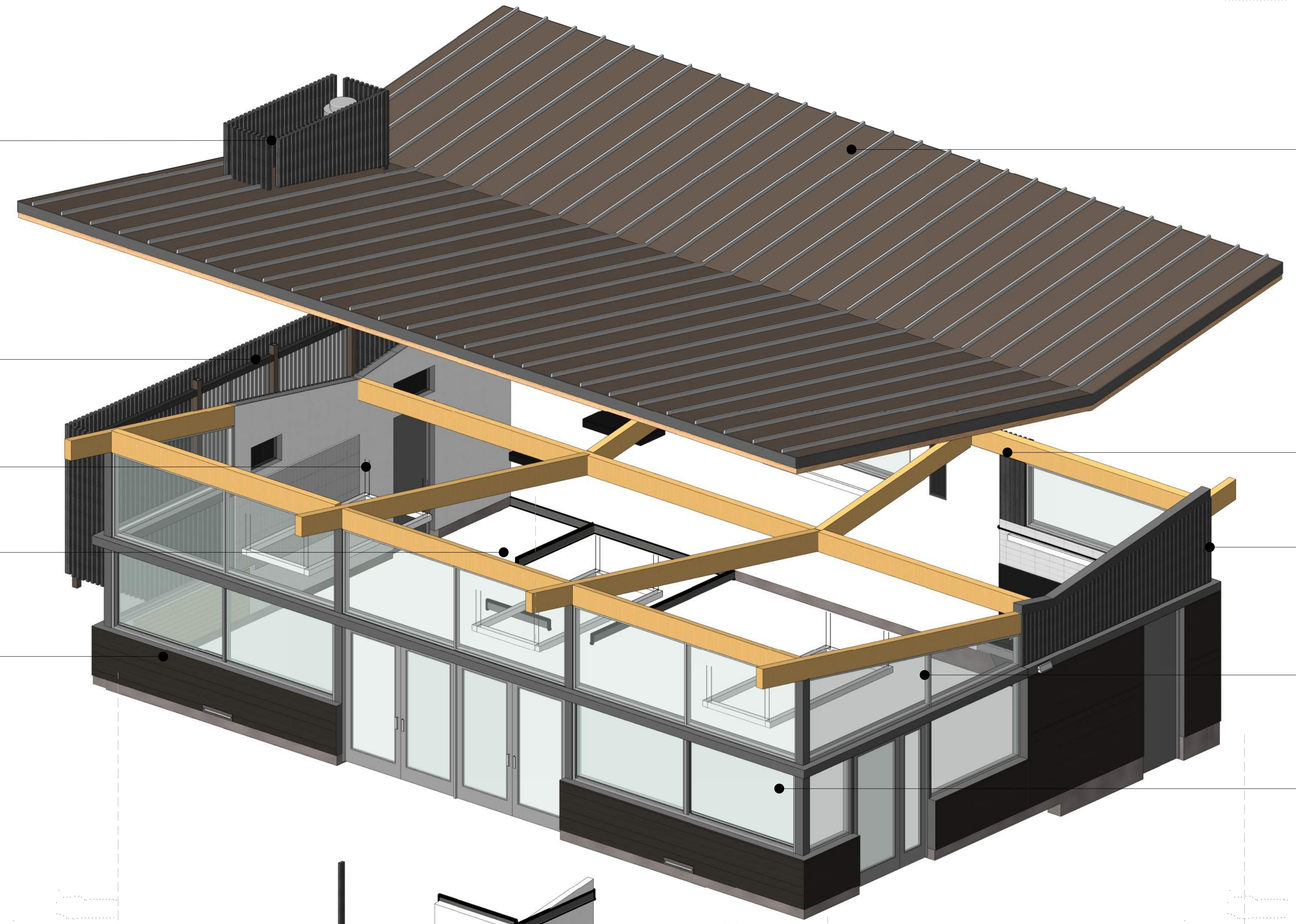

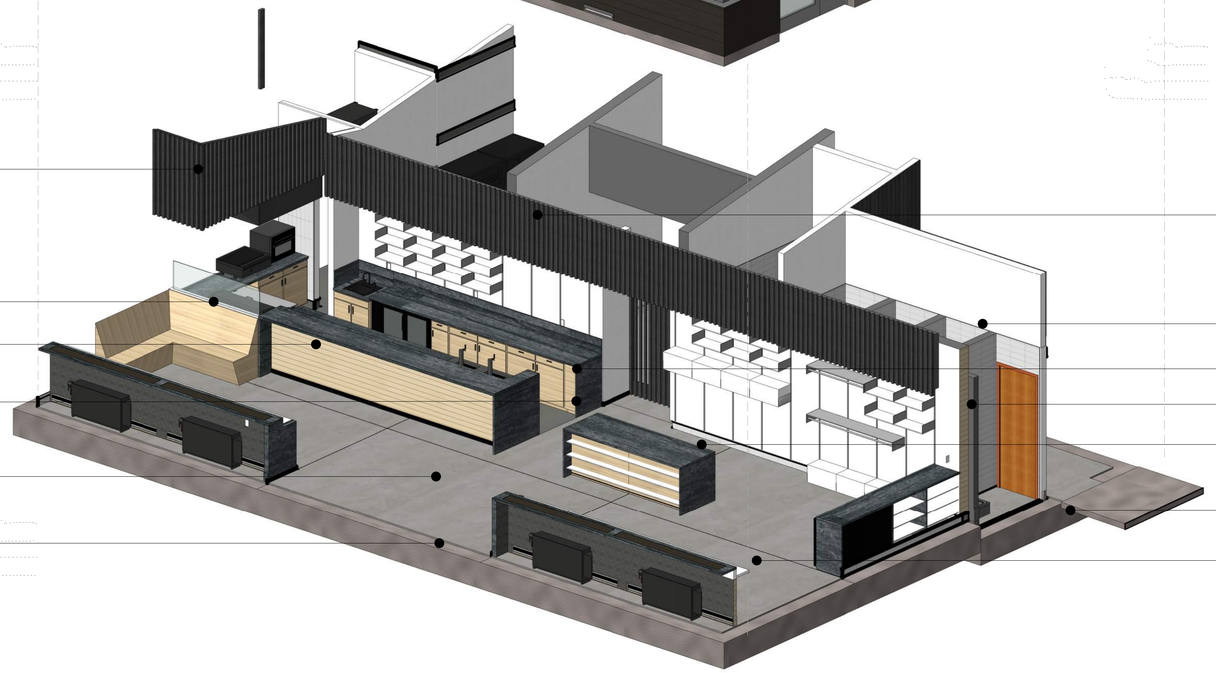

1 MATERIAL AXONOMETRIC

C:\Users\eharriso\Documents\1804_GGP_GC_CLUBHOUSE_R18_eharriso.rvt
11/2/2020 6:18:40 PM

Original Sheet Size: 22"x34"

BUREAU OF ARCHITECTURE

SAN FRANCISCO PUBLIC WORKS

Ron Alameida - City Architect
Julia Laue - Principal Architect / Bureau Manager
30 Van Ness Ave., Suite 4100, San Francisco, CA 94102
Fax (415)557-4701, Phone (415)557-4700

Golden Gate Park Golf Clubhouse

970 47th Avenue
San Francisco, CA 94121

Consultant

FOR DBI USE ONLY

Project Status 11.16.2020

No.	Date	Revisions

PM Noah Levy
PA Paul DeFreitas
Drawn Author
Checked Checker

NOT FOR CONSTRUCTION

Drawing Title

MATERIAL AXONOMETRIC

Sheet No. A11.10

Scale:

Project No. 1804