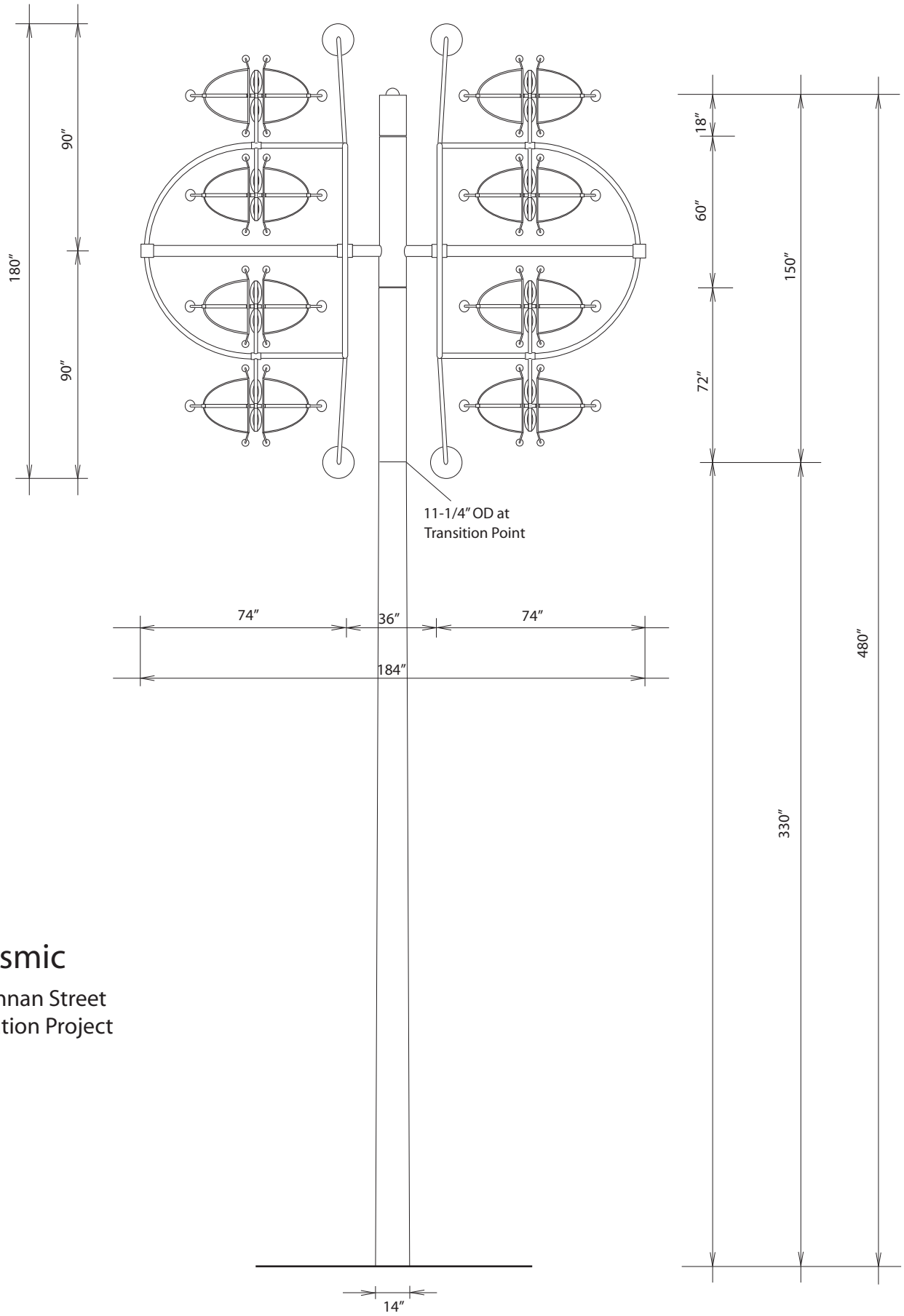

Microcosmic

4th and Brannan Street
Platform Station Project

Elevation

Moto Ohtake 2014

Microcosmic

4th and Brannan Street
Platform Station Project
Moto Ohtake

I. GENERAL NOTES:

A. SCULPTURE DESIGN CRITERIA
1. CALIFORNIA BUILDING CODE (CBC, 2010 EDITION) AS AMENDED BY THE SAN FRANCISCO BUILDING CODE.
2. AASHTO, 2009 (WITH 2010 INTERIM REVISIONS) STANDARD SPECIFICATION FOR SUPPORT FOR HIGHWAY SIGNS, LUMINAIRES AND TRAFFIC SIGNALS. DESIGNED IN ACCORDANCE WITH FATIGUE CRITERIA.

B. POLE DESIGN CRITERIA
1. SUPPORTING POLE IS TO BE SUBMITTED AS A DESIGN-BUILD SYSTEM AS PREVIOUSLY SPECIFIED IN DRAWINGS BY DEADALUS ENGINEERING TITLED "THIRD STREET LIGHT RAIL PROGRAM PHASE 2-CENTRAL SUBWAY SURFACE, TRACK AND SYSTEMS" DATED 5.25.2012
2. CODE WIND DESIGN PRESSURE 43 PSI, 90 MPH WIND SPEED (PER ASCE 7-05). ESTIMATED SCULPTURE SURFACE AREA 70 SQ.FT. (TOP 15 FEET OF (POLE).
3. SEISMIC DESIGN PER ASCE-7-05
4. MAXIMUM ANTICIPATED POLE DEFLECTION AT TIP = 5.7 INCHES AT 90 MPH WIND GUST.
5. ESTIMATED SCULPTURE WEIGHT = 1,500 LBS
6. ALL CONNECTION DESIGN PER ASSHTO DESIGN CRITERIA

C. DISCLAIMER

DEADALUS IS NOT AWARE OF ANY SPECIFIED DESIGN CODES, GUIDELINES OR CRITERIA FOR A MOBILE SCULPTURE OR SIMILAR STRUCTURES AND WE MAKE NO WARRANTEE BASED ON ANY DESIGN CODES, STANDARDS, OR OTHER CRITERIA EXCEPT AS PROVIDED IN THESE NOTES AND IN OUR CALCULATIONS. THE DESIGN IS BASED ON THE CODES AND STANDARDS NOTED ABOVE AND DESIGN ASSUMPTIONS BASED ON OUR ENGINEERING JUDGEMNET AND EXPERIENCE AND A DESIGN WIND SPEED OF 90 MPH PROVIDED BY THE SFMTA PROJECT ENGINEER OF RECORD WHO PROVIDED PEER REVIEW OF THE POLE DESIGN.

II. STRUCTURAL STEEL SPECIFICATION

A. GENERAL
1. CODE: COMPLY WITH AISC "MANUAL OF STEEL CONSTRUCTION" FOURTEENTH EDITION FOR ALL TOLERANCES, EDGE DISTANCES, SPACING, MINIMUM WELD SIZES AND OTHER DETAILS AND INFORMATION NOT PROVIDED.

B. MATERIALS
1. GENERAL: ALL STEEL SHALL BE IDENTIFIED AS REQUIRED BY CBC SECTION 2203A.2. STEEL WHICH IS NOT PROPERLY IDENTIFIED SHALL BE TESTED TO SHOW CONFORMANCE WITH REQUIREMENT OF APPLICABLE ASTM STANDARD AT CONTRACTOR'S EXPENSE.
2. PIPES: ASTM A53, TYPE S, GRADE B.
3. WELDING FILLER MATERIAL: AWS D1.1; TYPE REQUIRED FOR BASE MATERIALS BEING WELDED.ELECTRODES SHALL BE E70XX, LOW HYDROGEN, UNLESS OTHERWISE NOTED.
4. SET SCREWS: STAINLESS STEEL WITH ALLEN HEAD AND CONE TIP-ASTM F880
5. ACCESSORIES: SET SCREW THREAD ADHESIVE - THREADLOCKER RED 271 AS MANUFACTURED BY "LOCTITE"
6. STAINLESS STEEL: ALL STAINLESS STEEL SHALL BE S30400 AND SHALL BE MANUFACTURED IN ACCORDANCE WITH ASTM A554.

C. EXECUTION
1. FABRICATION
   a. FABRICATE STRUCTURAL STEEL MEMBERS IN ACCORDANCE WITH AISC SPECIFICATIONS, AISC MANUAL (FOURTEENTH EDITION) AND THE 2010 CALIFORNIA BUILDING CODE.
   b. ALL WELDING TO USE TUNGSTEN INERT GAS (TIG) WELDING PROCESS. USE WELDING ROD AS RECOMMENDED BY THE AMERICAN WELDING SOCIETY (AWS) FOR THE TIG WELDING PROCESS.
   c. WELDING PROCEDURES: FOLLOW ALL RECOMMENDATIONS OF THE AMERICAN WELDING SOCIETY FOR TIG WELDING OF STAINLESS STEEL.

D. QUALITY ASSURANCE
1. FABRICATOR SHALL PREPARE WELDING PROCEDURE SPECIFICATIONS (WPS), PER AWS D1.1.
2. QUALIFY WELDING PROCEDURES AND WELDING OPERATORS IN ACCORDANCE WITH AWS D1.1 "QUALIFICATION" REQUIREMENT.
3. WELDING SPECIAL INSPECTION SHALL BE IN ACCORDANCE WITH CBC SECTION 1704.2 AND 1704.3 OR AS REQUIRED BY THE CITY OF SAN FRANCISCO.

Microcosmic

4th and Brannan Street
Platform Station Project

Main Kinetic Components
Overall View

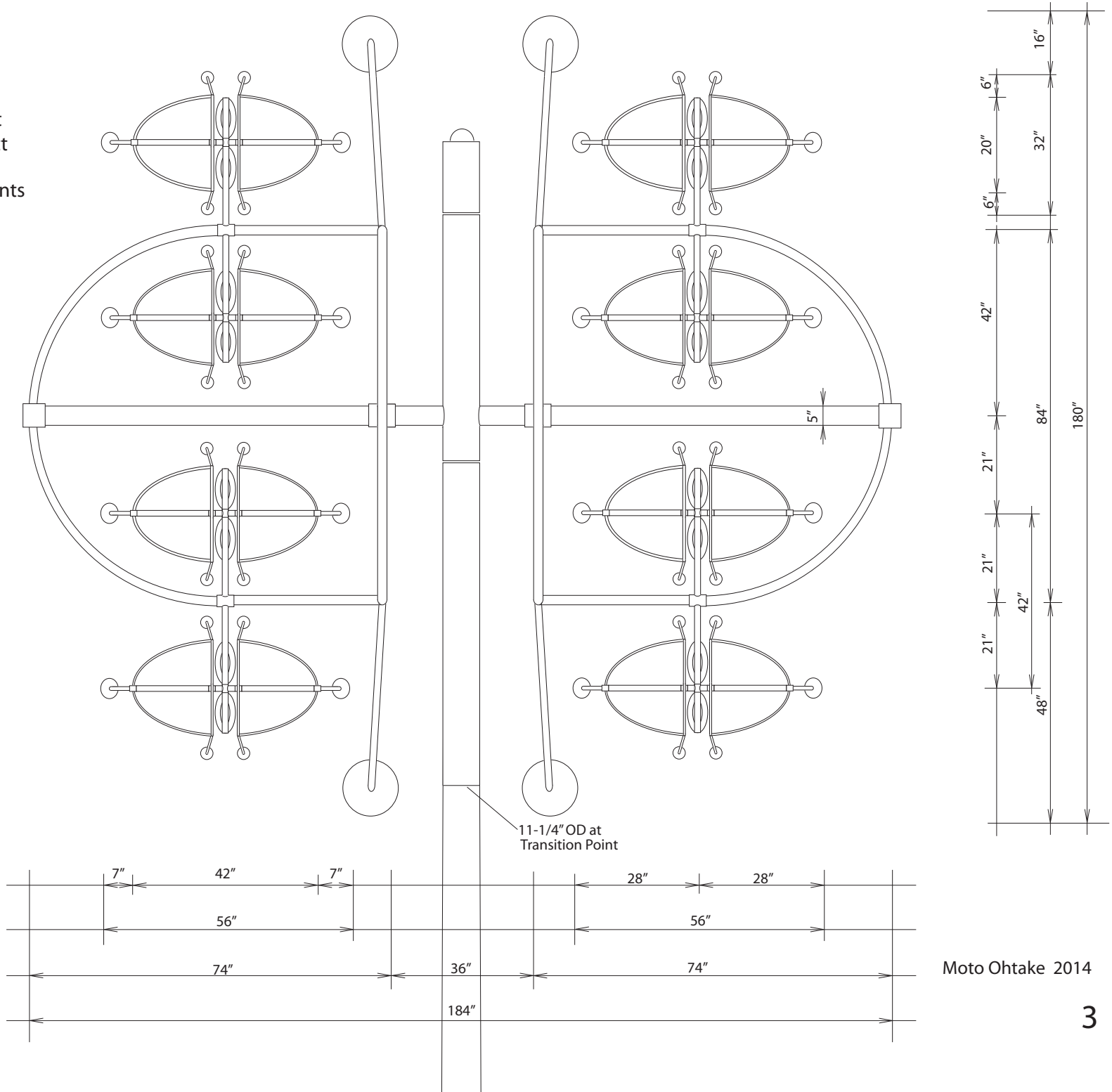

Moto Ohtake 2014

Microcosmic

4th and Brannan Street
Platform Station Project

Main Kinetic Components
Frame

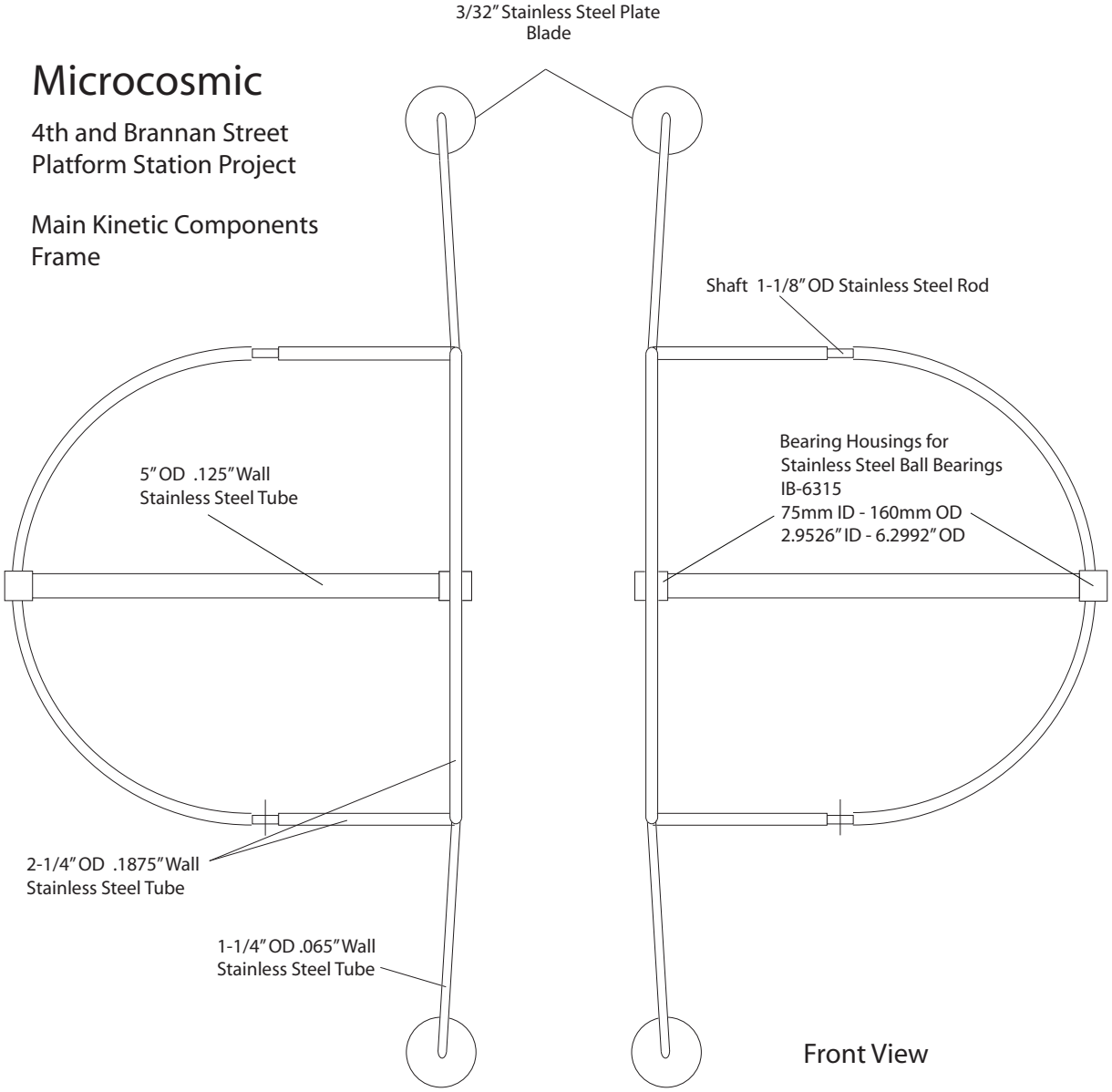

Front View

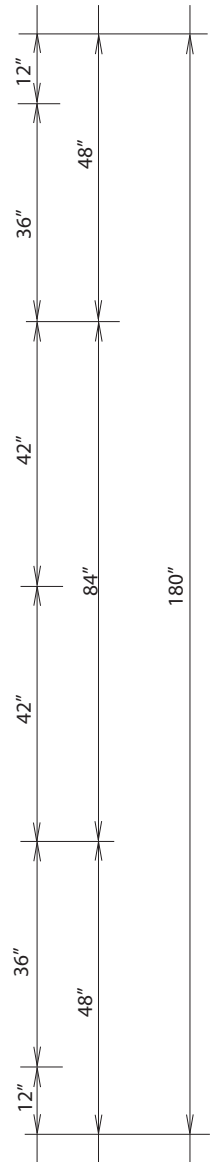

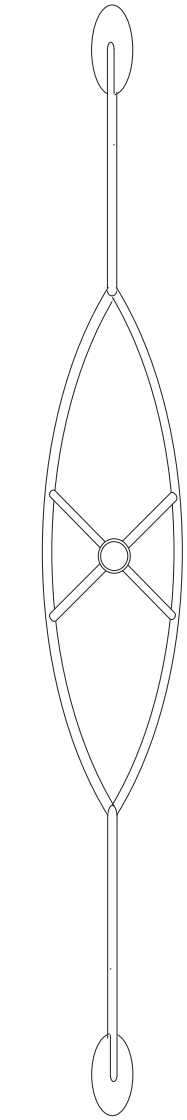

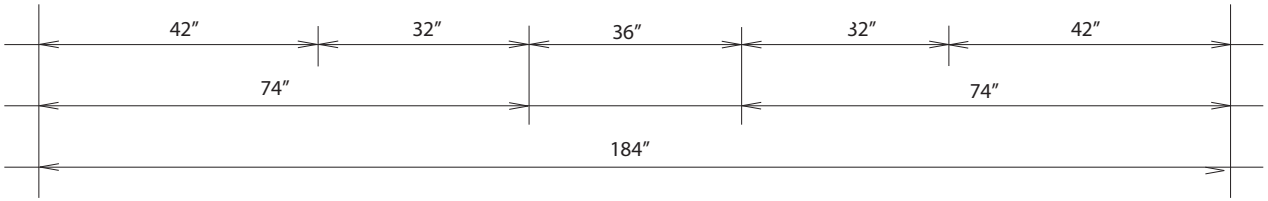

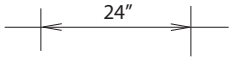

Moto Ohtake 2014

Microcosmic
4th and Brannan Street
Platform Station Project
Main Kinetic Component Frame
Detail - A ~ I

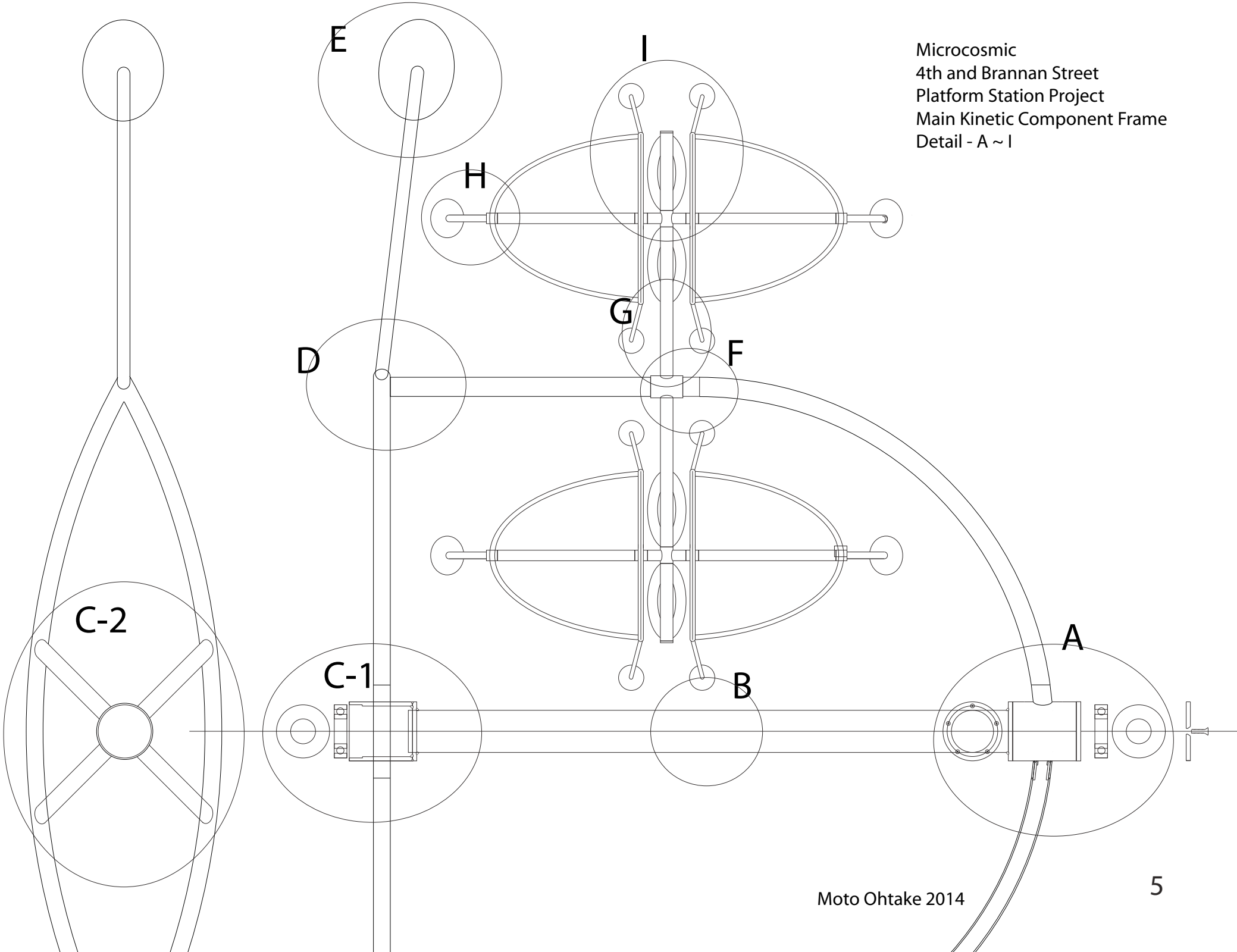

Moto Ohtake 2014

Microcosmic
4th and Brannan Street
Platform Station Project
Main Kinetic Component Frame T-Arm Detail A, B

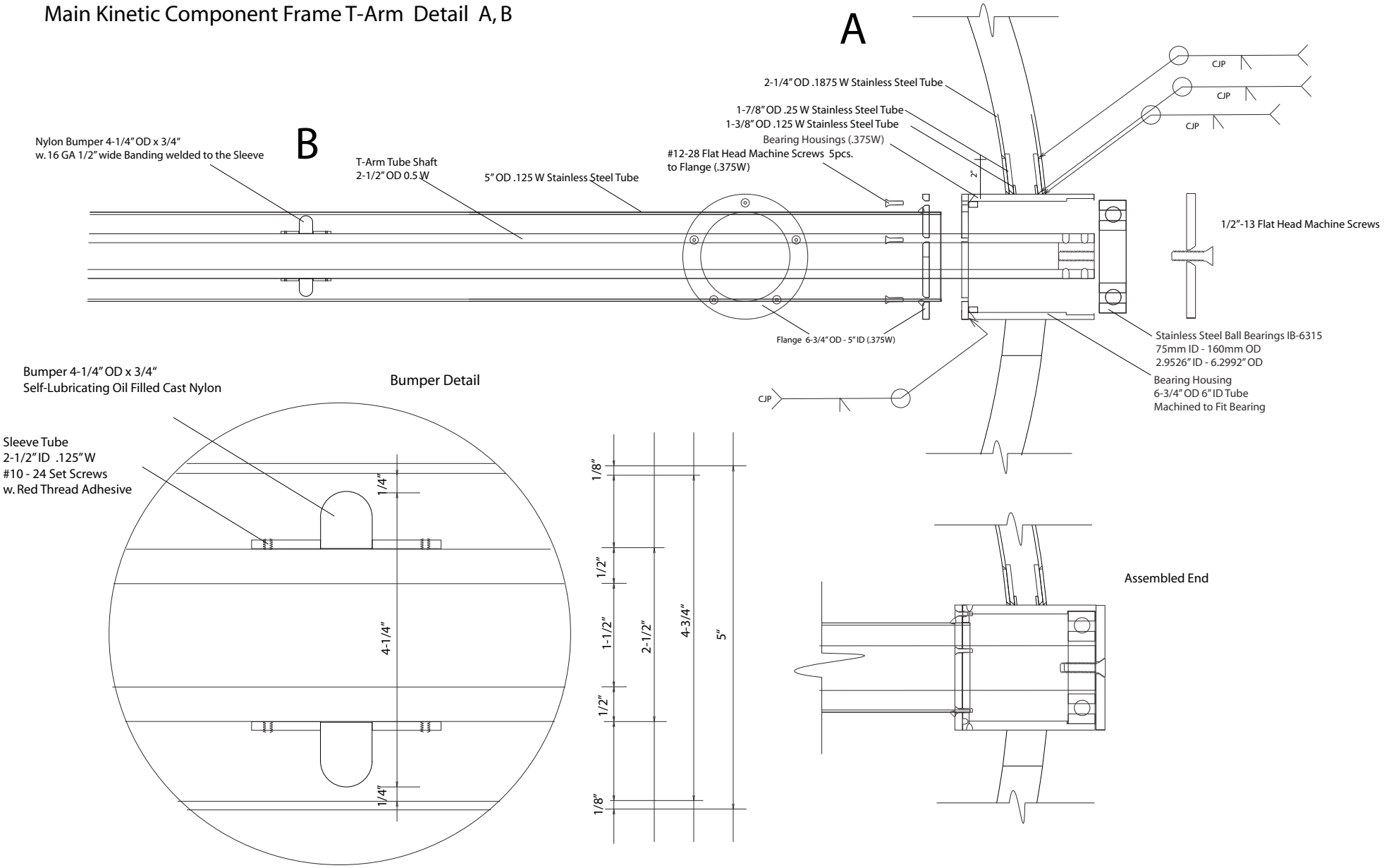

Microcosmic
4th and Brannan Street
Platform Station Project
Main Kinetic Component Frame
T-Arm Connection
Detail - A, B

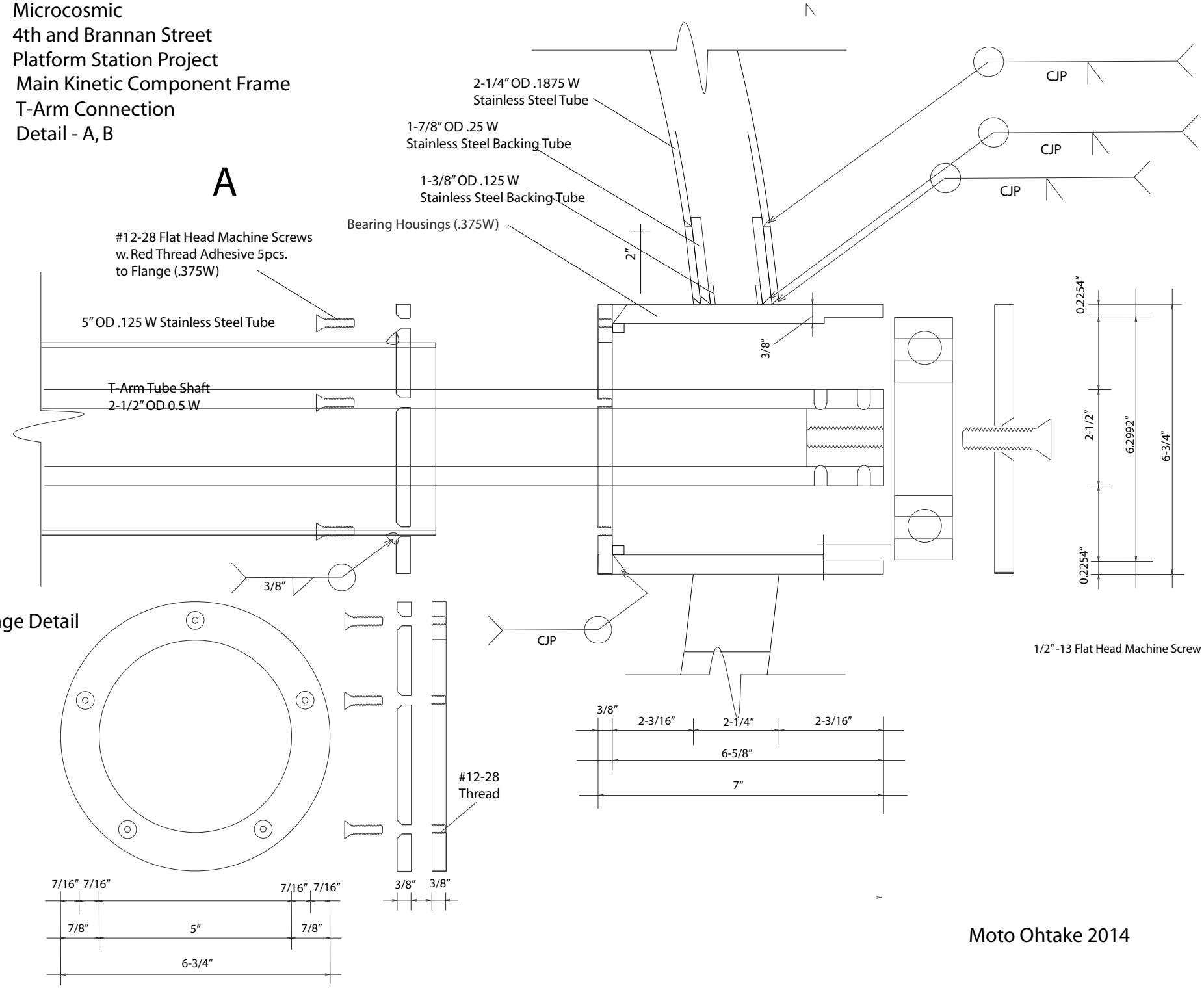

Flange Detail

Moto Ohtake 2014

Microcosmic
4th and Brannan Street
Platform Station Project
Main Kinetic Component
Detail-C-1

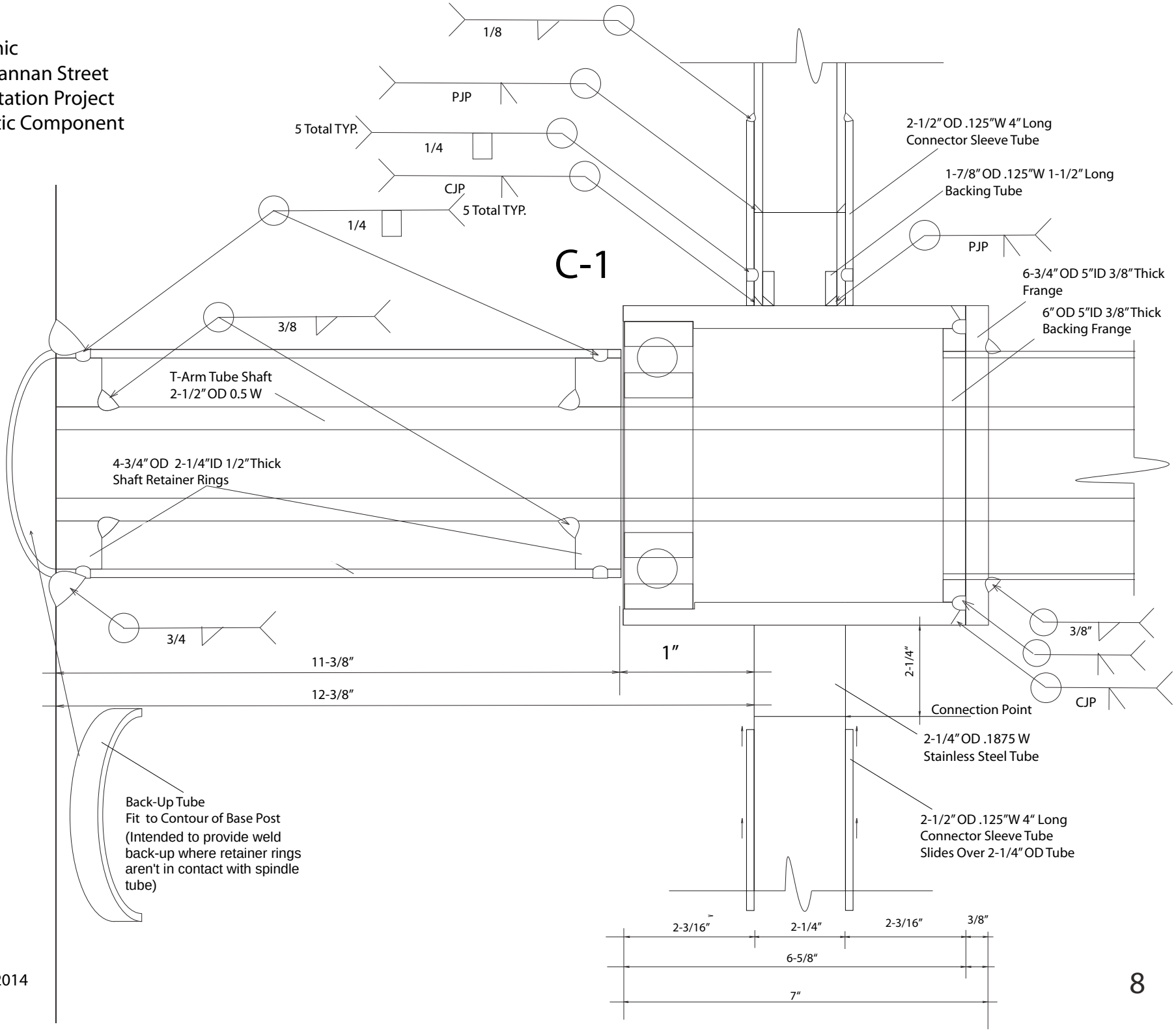

Microcosmic
4th and Brannan Street
Platform Station Project
Main Kinetic Component
Detail-C-2

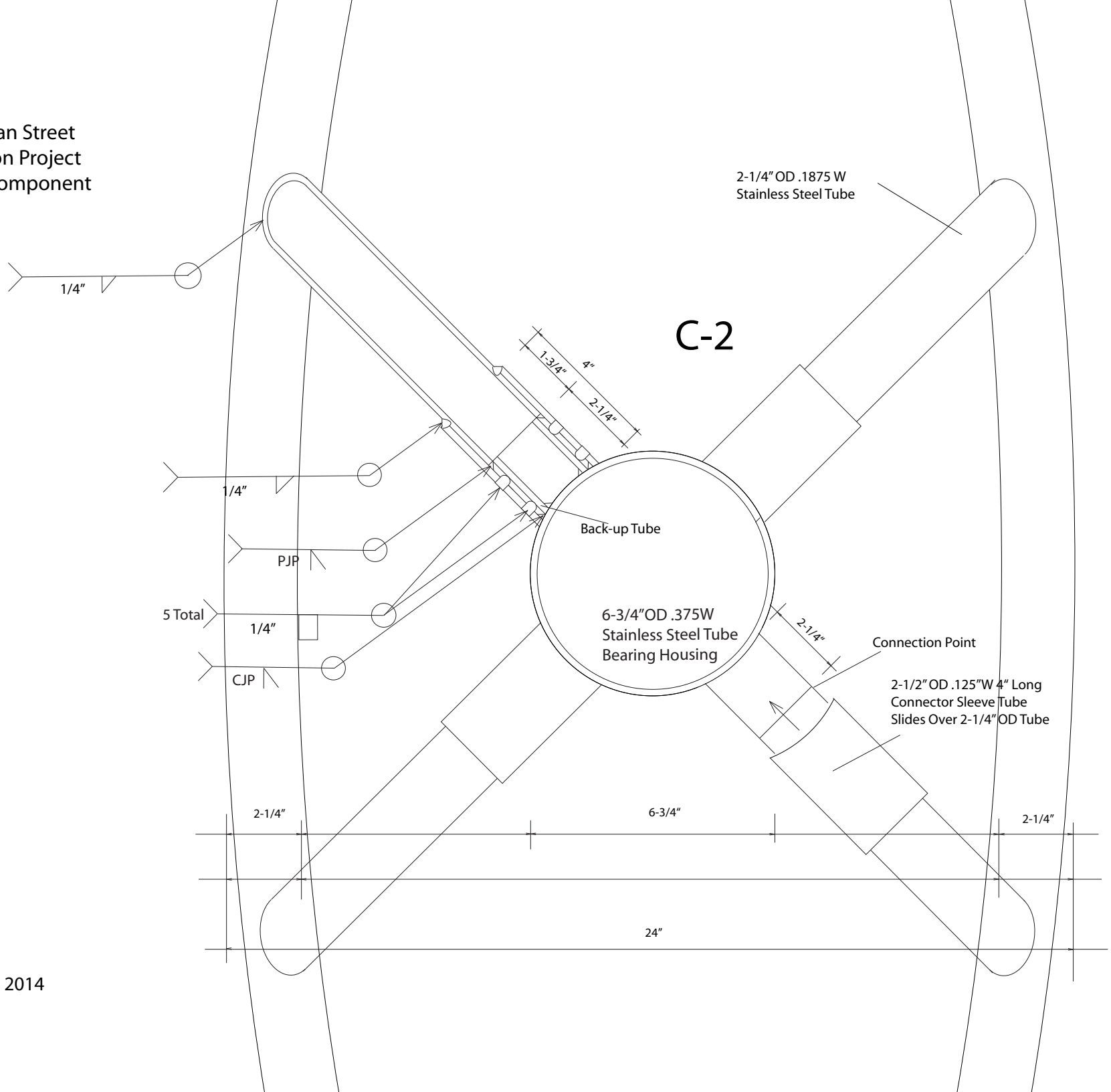

Moto Ohtake 2014

Microcosmic
4th and Brannan Street
Platform Station Project
Main Kinetic Component Frame
Detail -D, E

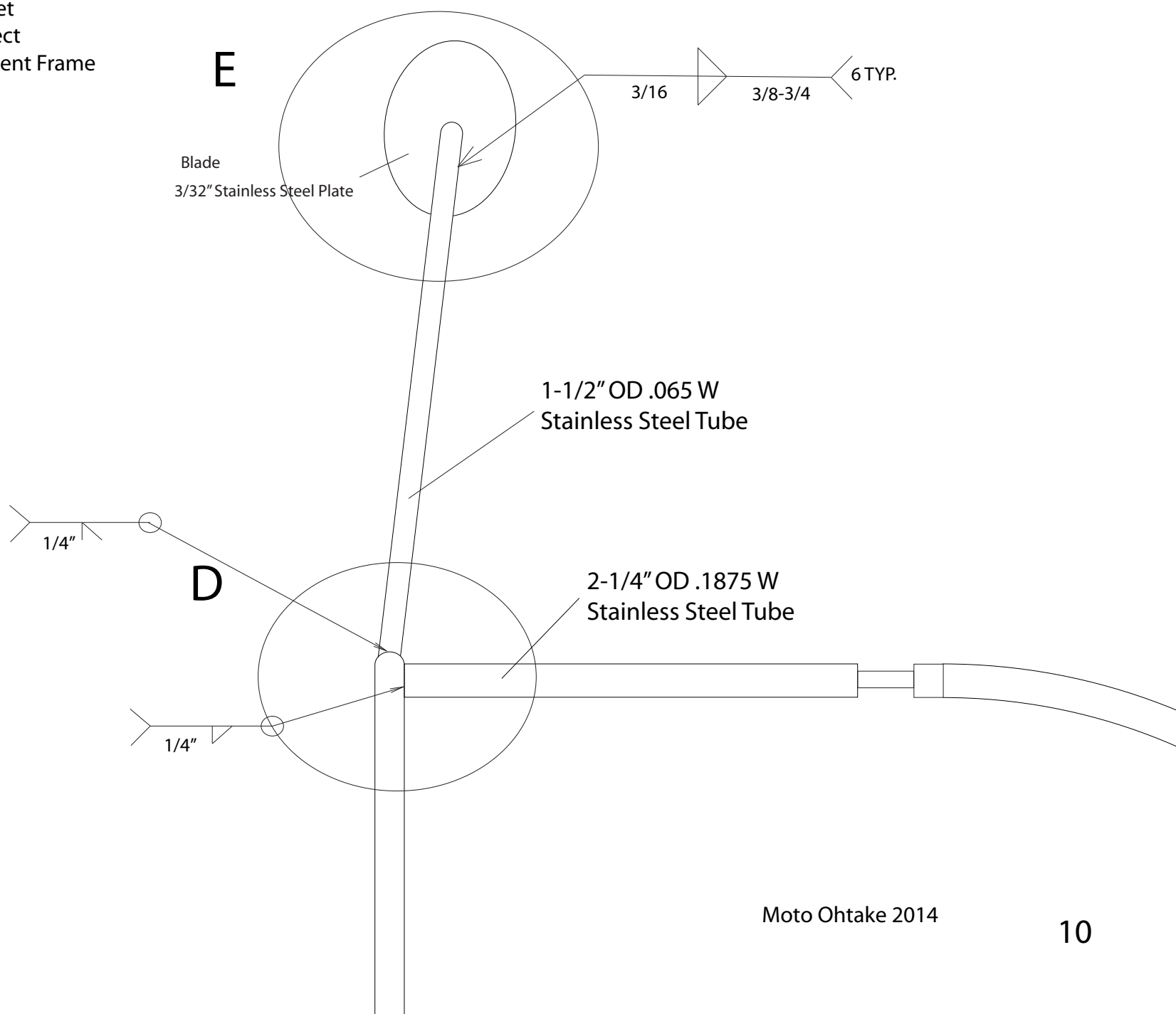

Moto Ohtake 2014

Microcosmic
4th and Brannan Street
Platform Station Project
Main Kinetic Component Frame
Connection to Small Kinetic Component
Detail - F

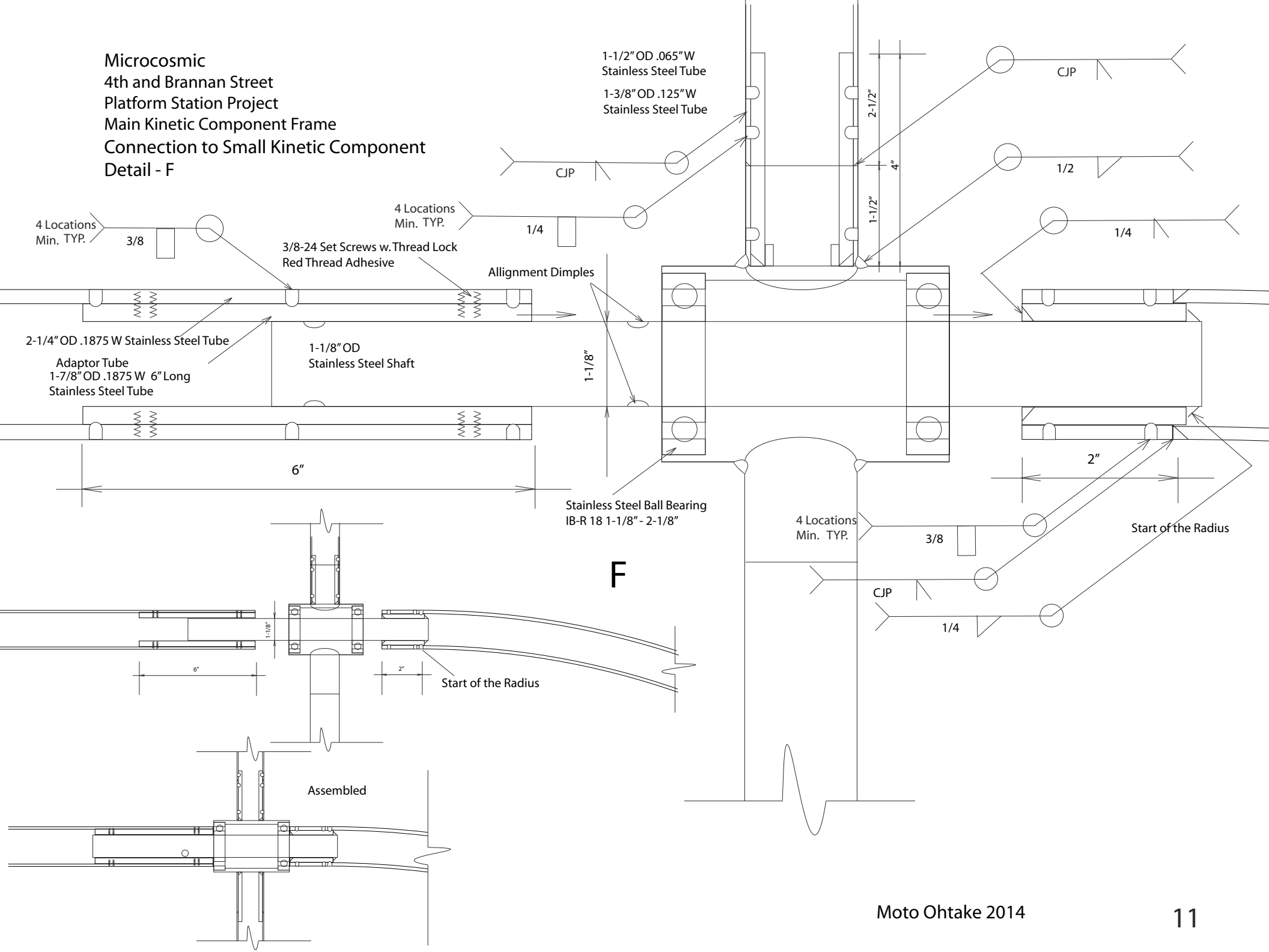

Moto Ohtake 2014

Microcosmic

4th and Brannan Street
Platform Station Project

Small Kinetic Assembly

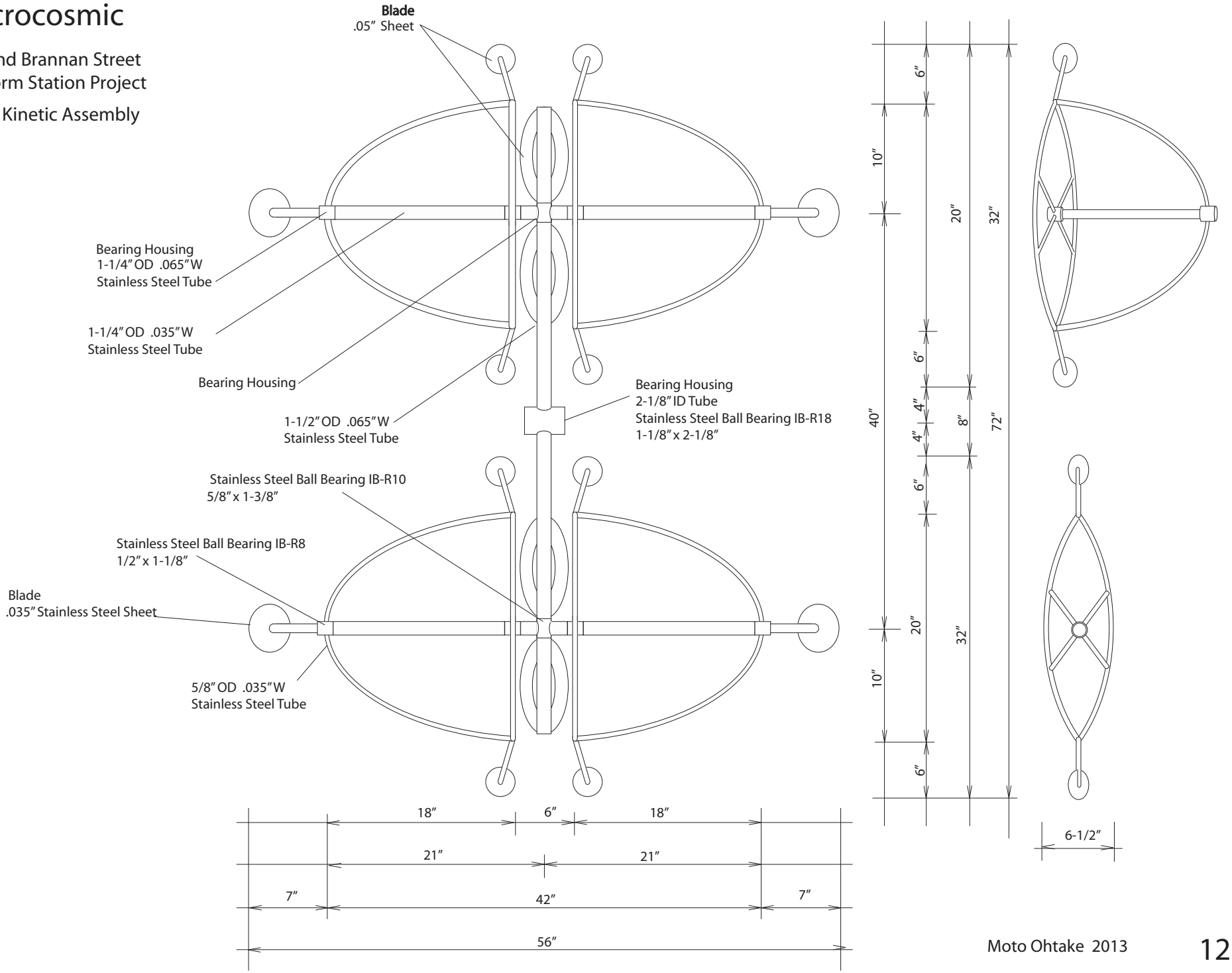

Moto Ohtake 2013

Microcosmic
4th and Brannan Street
Platform Station Project
Small Kinetic Component
Detail-G, H, I

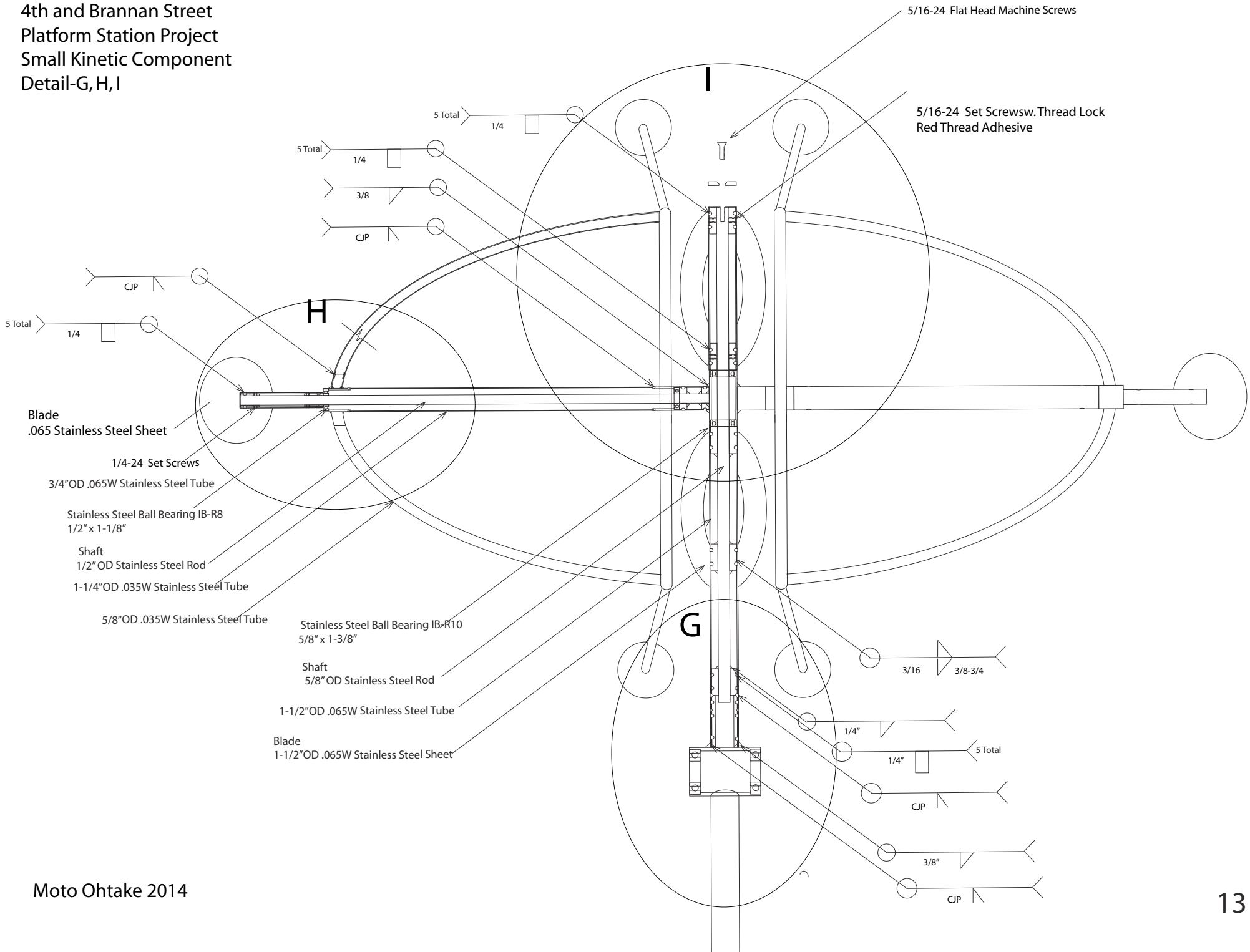

Moto Ohtake 2014

Microcosmic
4th and Brannan Street
Platform Station Project
Small Kinetic Component
Detail-G

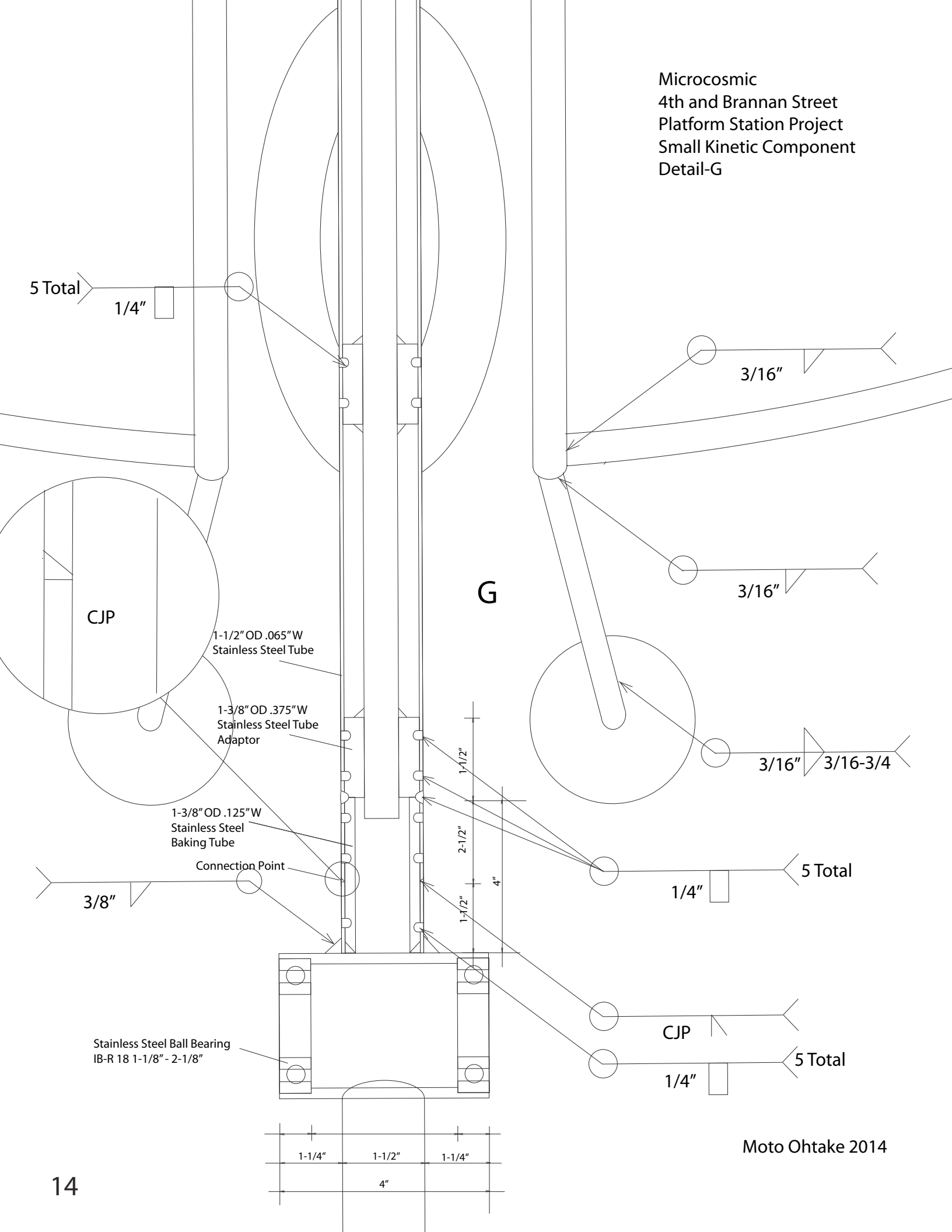

Moto Ohtake 2014

Microcosmic
4th and Brannan Street
Platform Station Project
Small Kinetic Component
Detail-H

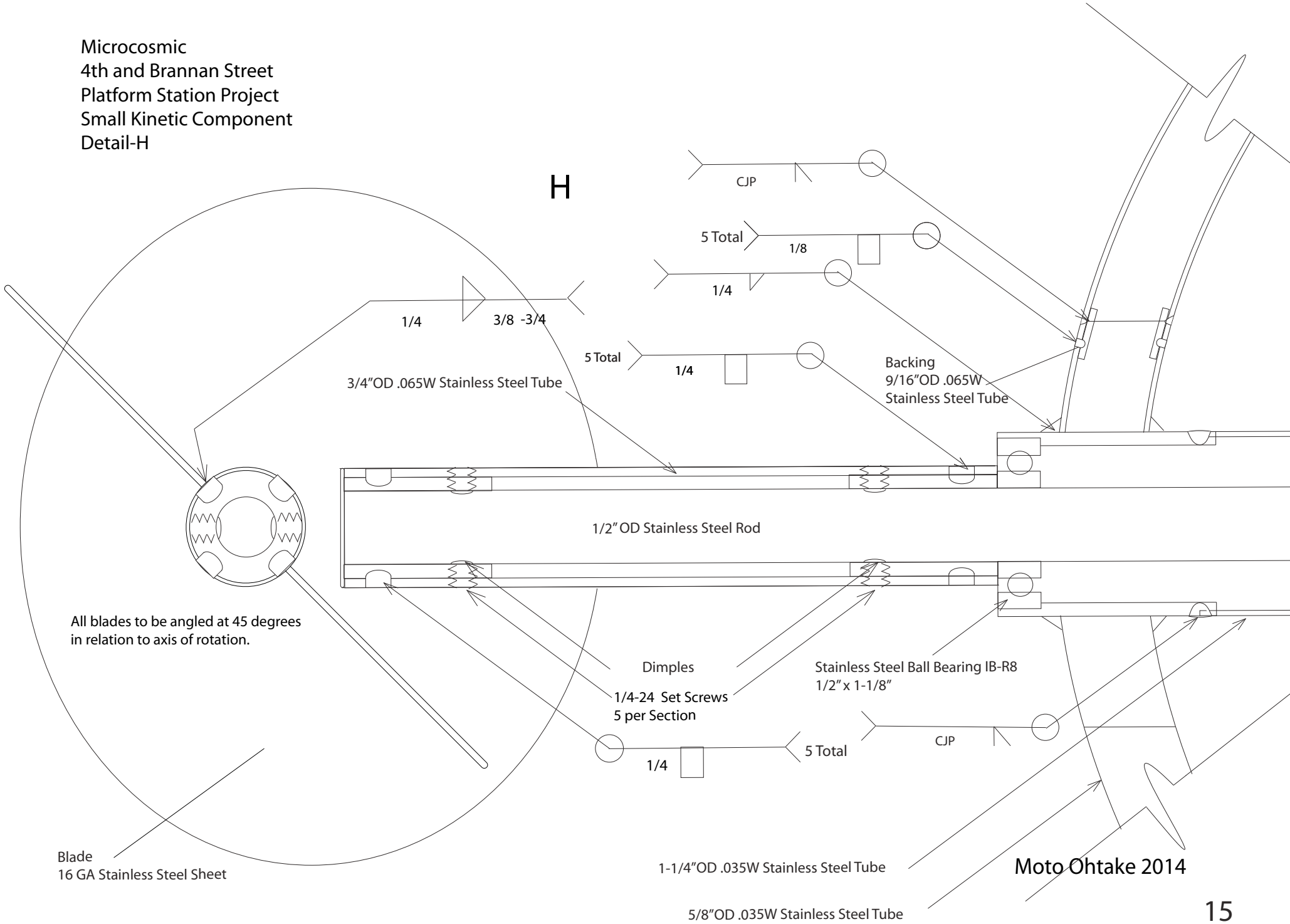

Moto Ohtake 2014

Microcosmic
4th and Brannan Street
Platform Station Project
Small Kinetic Component
Detail - I

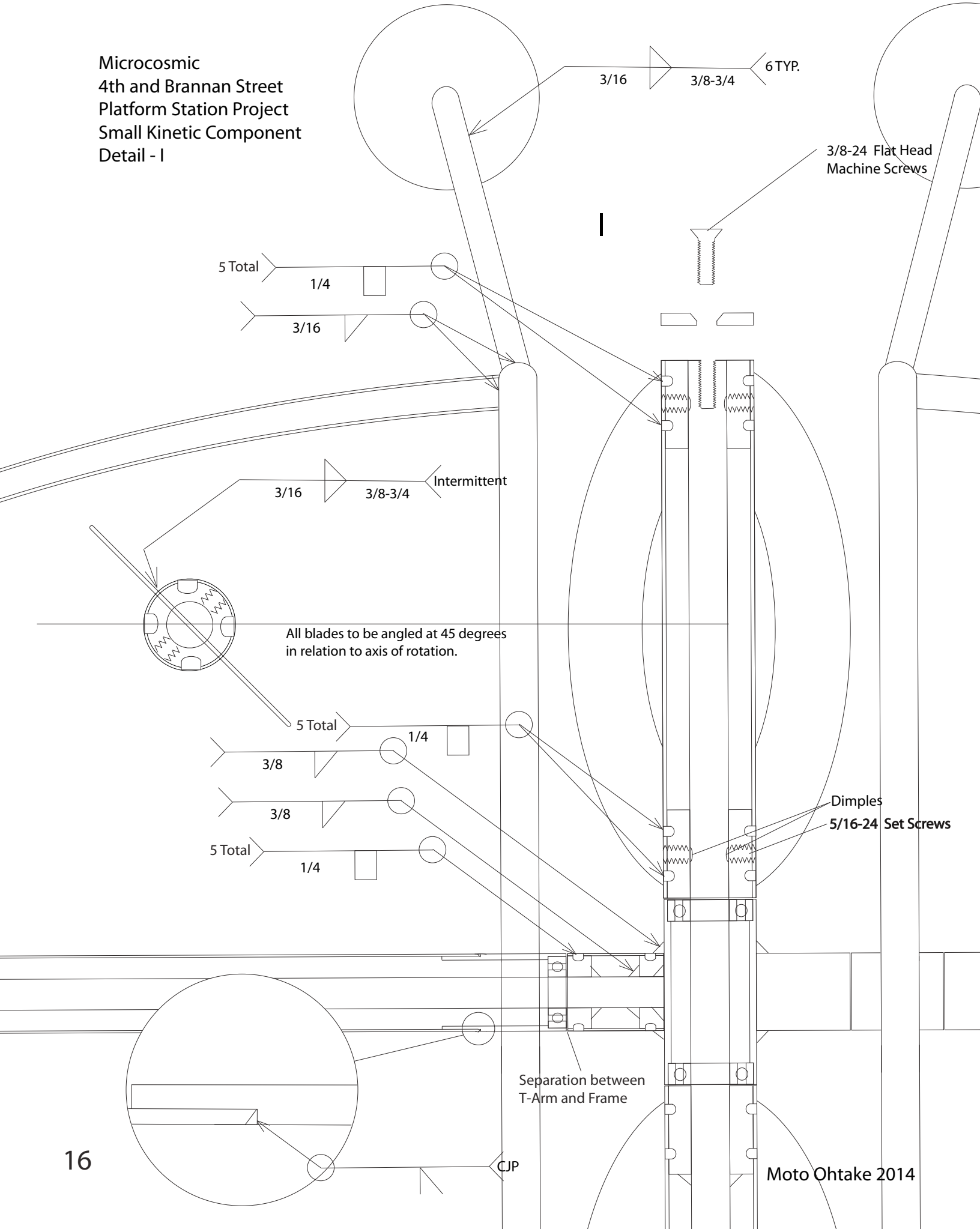

Moto Ohtake 2014

Microcosmic

4th and Brannan Street
Platform Station Project

Main Spindle Assembly at Upper Base Post

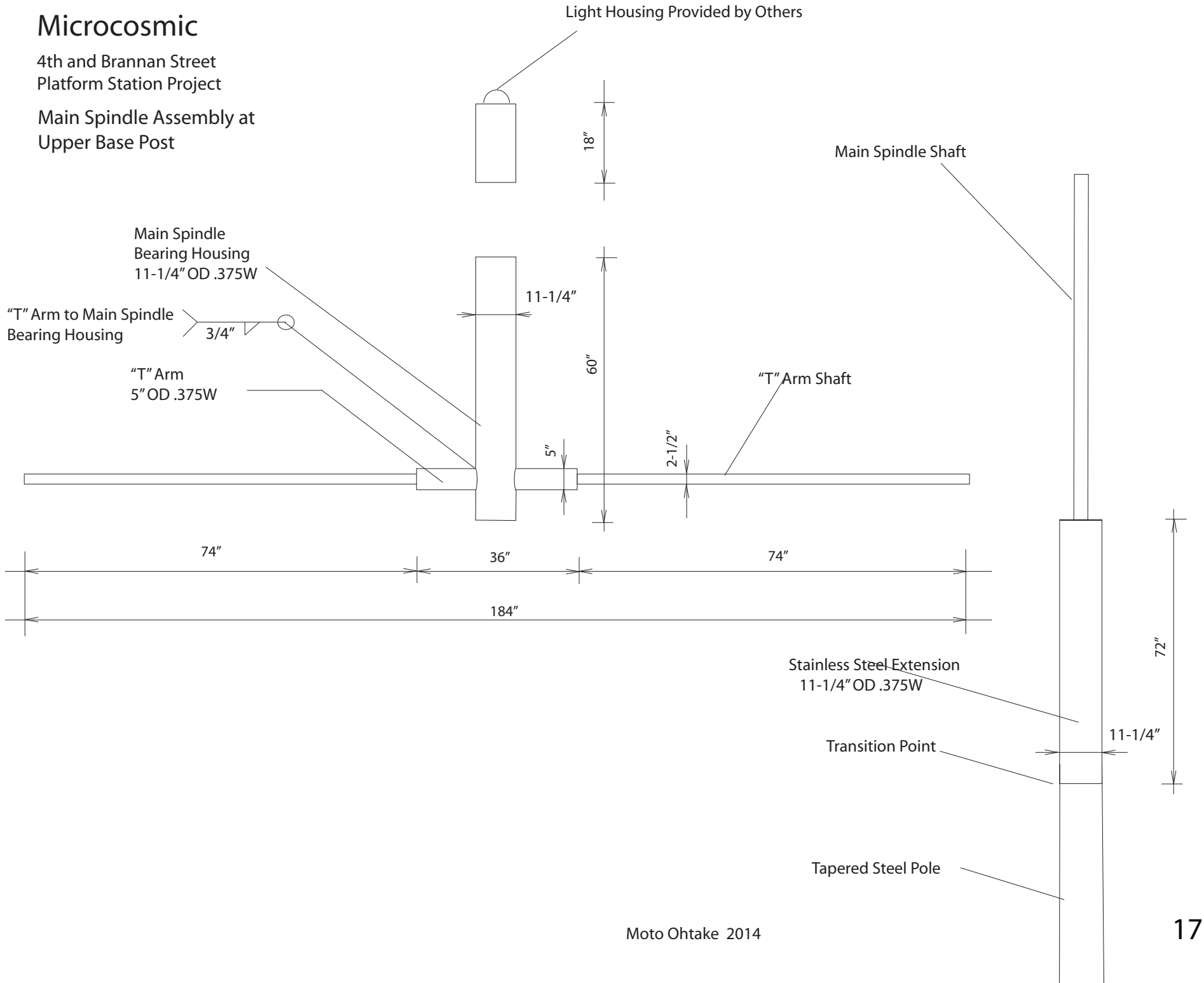

Moto Ohtake 2014

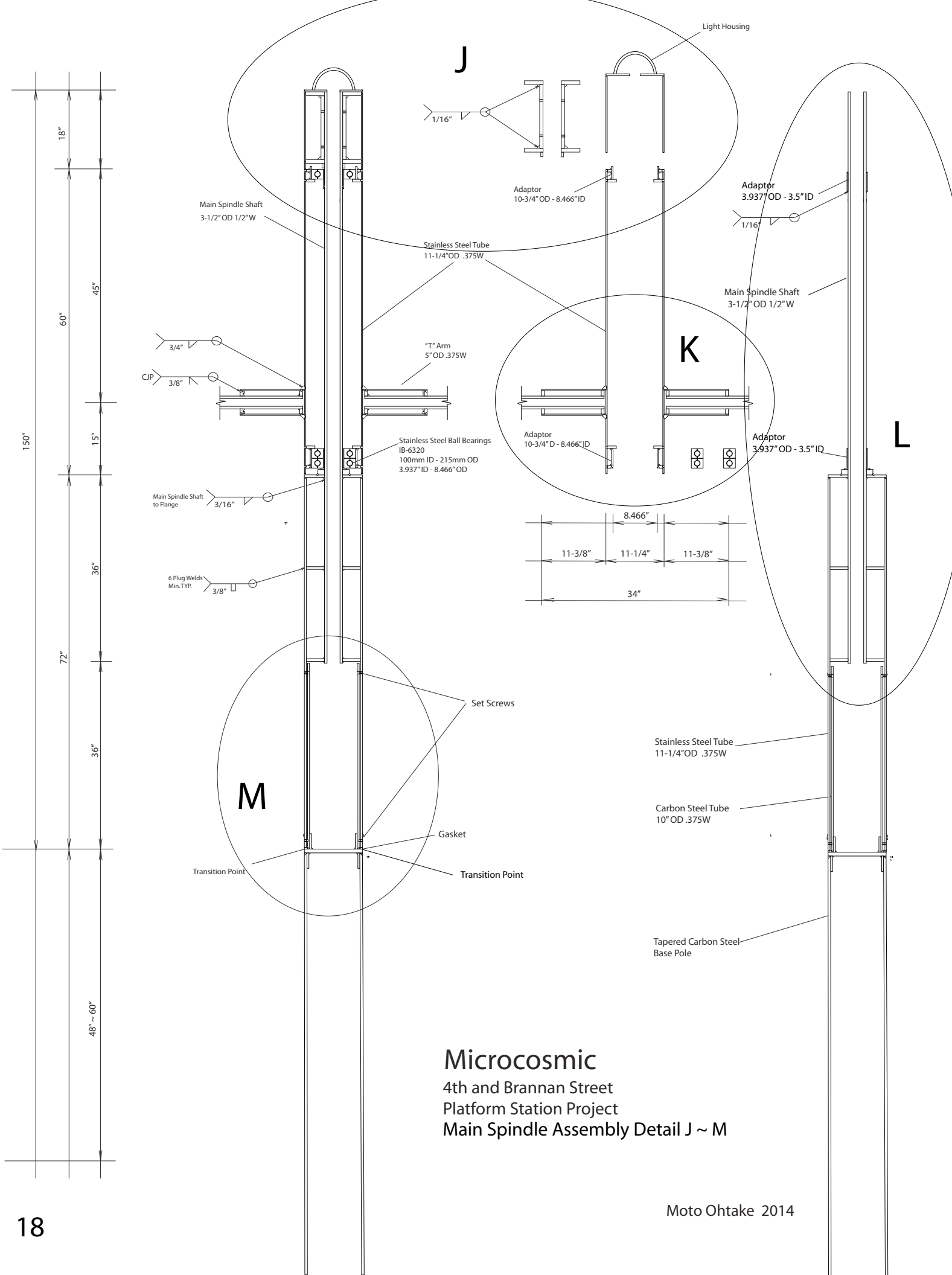

Microcosmic

4th and Brannan Street
Platform Station Project
Main Spindle Assembly Detail J ~ M

Moto Ohtake 2014

Microcosmic

4th and Brannan Street
Platform Station Project
Upper Base Post Detail J

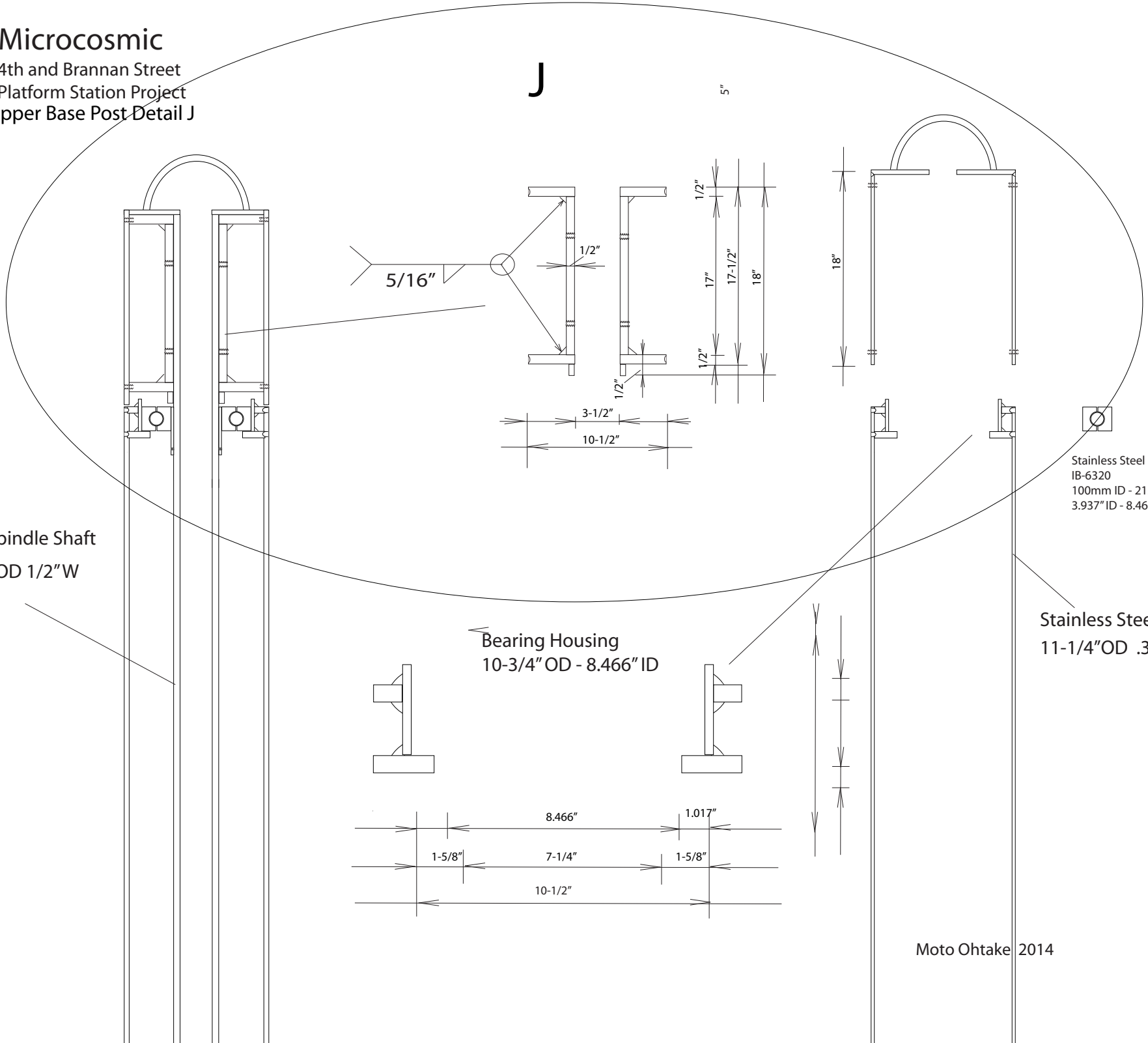

Moto Ohtake 2014

Microcosmic

4th and Brannan Street
Platform Station Project
Upper Base Post Detail K

K

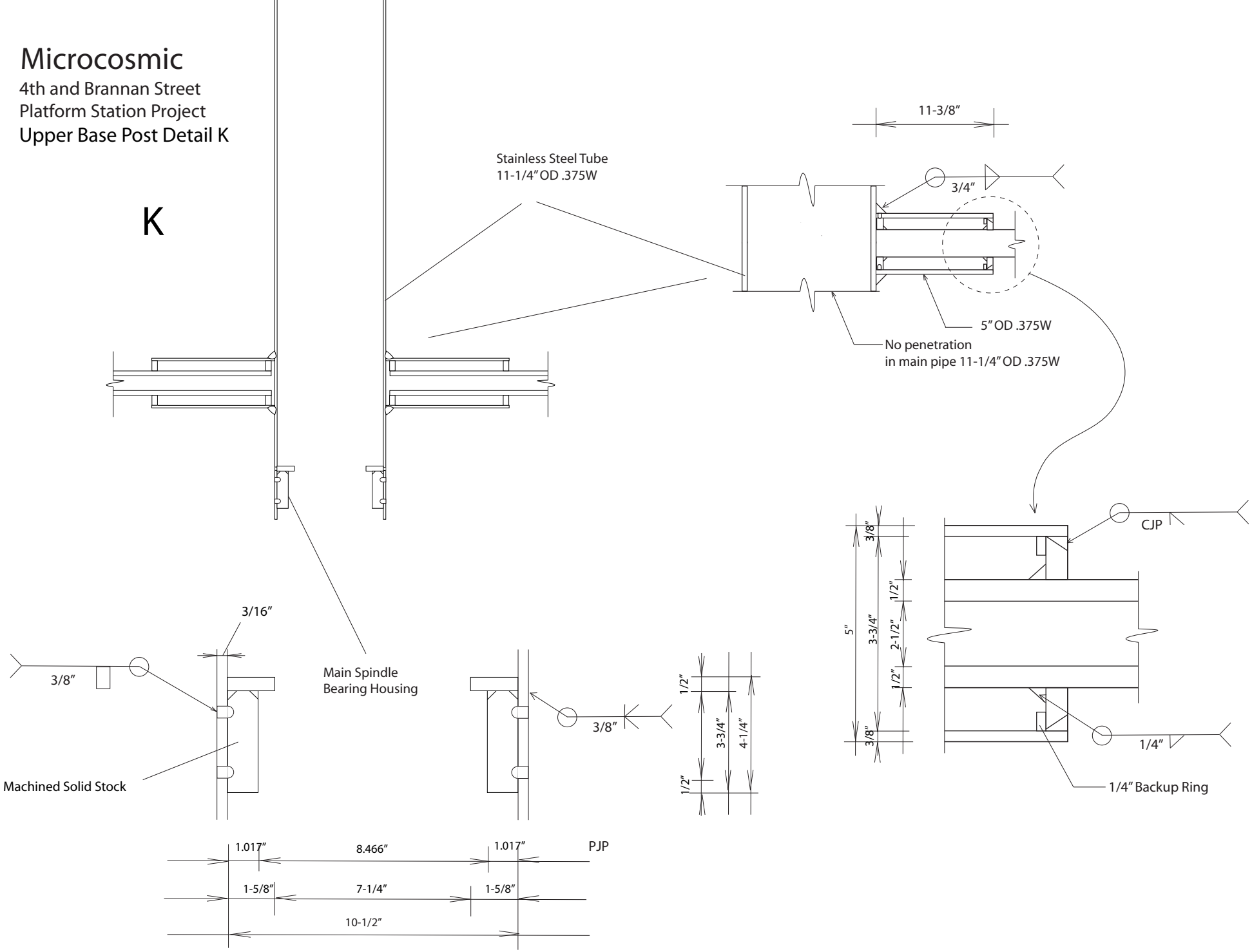

Moto Ohtake 2014

Microcosmic

4th and Brannan Street
Platform Station Project
Main Spindle Sleeve Detail L

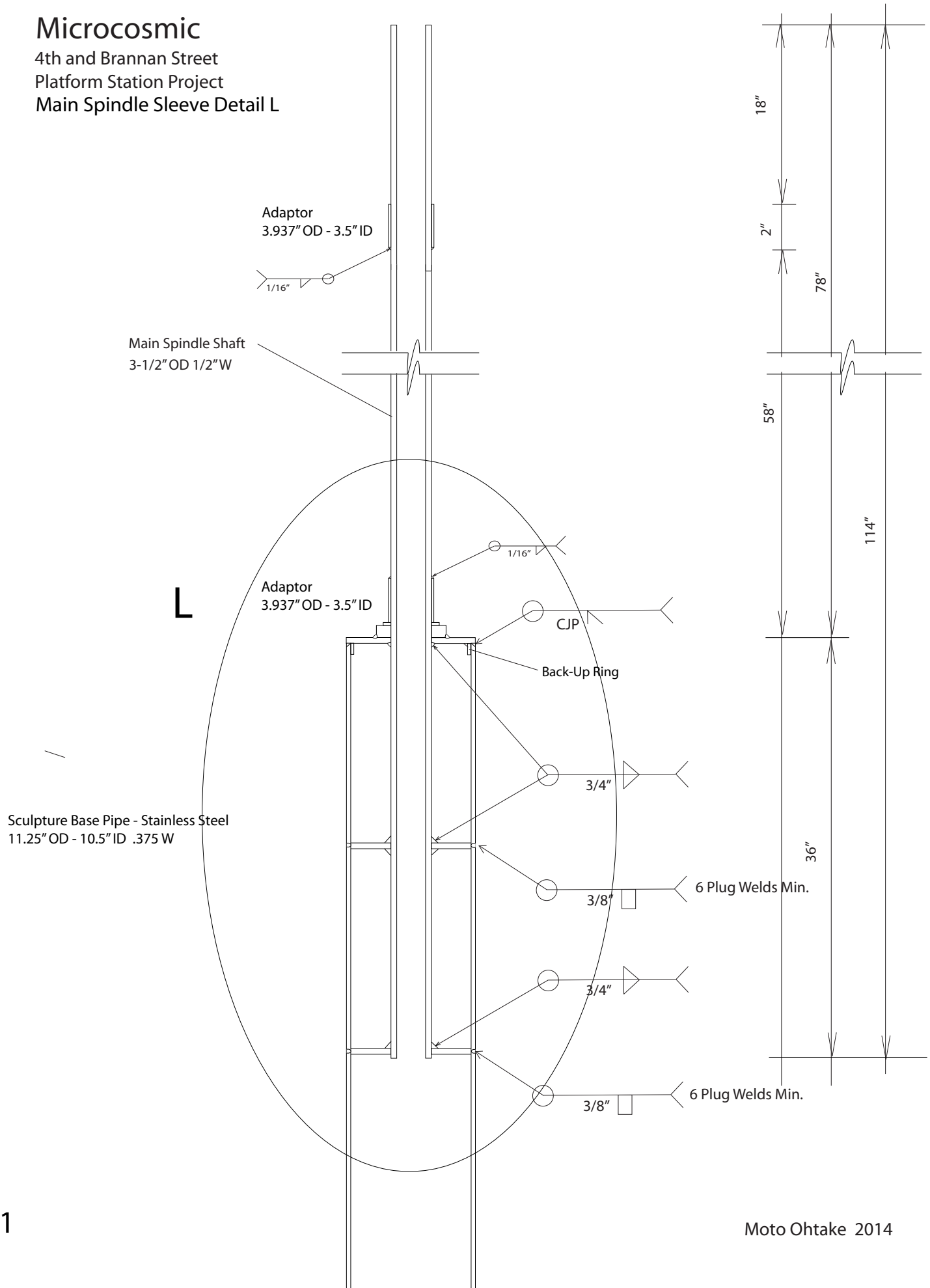

Moto Ohtake 2014

Microcosmic

4th and Brannan Street
Platform Station Project
Upper Base Post Detail M