BOARD OF APPEALS, CITY & COUNTY OF SAN FRANCISCO

Appeal of
NEIGHBORS OF UPPER COLE VALLEY,)
Appellant(s))
)
vs.)
)
SAN FRANCISCO PUBLIC WORKS,)
BUREAU OF STREET USE AND MAPPING,)
Respondent

Appeal No. **18-130**

NOTICE OF APPEAL

NOTICE IS HEREBY GIVEN THAT on October 01, 2018, the above named appellant(s) filed an appeal with the Board of Appeals of the City and County of San Francisco from the decision or order of the above named department(s), commission, or officer.

The substance or effect of the decision or order appealed from is the ISSUANCE on September 19, 2018 to Mobilitie, LLC, of a Personal Wireless Service Facility Site Permit (construction of a personal wireless service facility in a Zoning Protected Location) at 1509 Shrader Street.

APPLICATION NO. 18WR-003

FOR HEARING ON November 14, 2018

Address of Appellant(s):	Address of Other Parties:
Neighbors of Upper Cole Valley, Appellant c/o Brian Sedar, Agent for Appellant 1509 Schrader Street San Francisco, CA 94117	Mobilitie, LLC, Permit Holder c/o James Singleton, Agent for Permit Holder 2955 Rehill Avenue #200 Costa Mesa, CA 92626

Date Filed:

BOARD OF APPEALS

OCT 01 2018

APPEAL # 18-130

CITY & COUNTY OF SAN FRANCISCO
BOARD OF APPEALS

PRELIMINARY STATEMENT OF APPEAL

I / We, **Neighbors of Upper Cole Valley**, hereby appeal the following departmental action: **ISSUANCE** of **Personal Wireless Service Facility Site Permit No. 18WR-0033** by the **San Francisco Public Works Bureau of Street Use and Mapping** which was issued or became effective on: **September 19, 2018**, to: **Mobilitie, LLC**, for the property located at: **1509 Shrader Street**.

BRIEFING SCHEDULE:

The Appellant may, but is not required to, submit a one page (double-spaced) supplementary statement with this Preliminary Statement of Appeal. No exhibits or other submissions are allowed at this time.

Appellant's Brief is due on or before: **October 25, 2018, (no later than three Thursdays prior to the hearing date)**, up to 12 pages in length, double-spaced, with unlimited exhibits, with eleven (11) copies delivered to the Board office by 4:30 p.m., and with additional copies delivered to the other parties the same day. In addition, an electronic copy should be emailed to: boardofappeals@sfgov.org if possible _____

Respondent's and Other Parties' Briefs are due on or before: **November 08, 2018, (no later than one Thursday prior to hearing date)**, up to 12 pages in length, doubled-spaced, with unlimited exhibits, with eleven (11) copies delivered to the Board office by 4:30 p.m., and with additional copies delivered to the other parties the same day. In addition, an electronic copy should be emailed to: boardofappeals@sfgov.org if possible.

Only photographs and drawings may be submitted by the parties at the hearing.

Hearing Date: **Wednesday, November 14, 2018, 5:00 p.m., City Hall, Room 416,** One Dr. Carlton B. Goodlett Place.

All parties to this appeal must adhere to the briefing schedule above, however if the hearing date is changed, the briefing schedule MAY also be changed. Written notice will be provided of any change to the briefing schedule.

In order to have their documents sent to the Board members prior to hearing, **members of the public** should submit eleven (11) copies of all documents of support/opposition no later than one Thursday prior to hearing date by 4:30 p.m. Please note that names and contact information included in submittals from members of the public will become part of the public record. Submittals from members of the public may be made anonymously.

Please note that in addition to the parties' briefs, any materials that the Board receives relevant to this appeal, including letters of support/opposition from members of the public, are distributed to Board members prior to hearing. All such materials are available for inspection at the Board's office. You may also request a copy of the packet of materials that are provided to Board members at a cost of 10 cents per page, per S.F. Admin. Code Ch. 67.28.

If you have any questions please call the Board of Appeals at 415-575-6880

The reasons for this appeal are as follows:

See attached statement.

Appellant or Agent (Circle One):

Signature: _____

Print Name: BRIAN SEGAR

RE: Wireless Facility Program - Permit Application No. 18WR-0033 – Short Statement re Appeal

We are appealing the issuance of this Permit for a Personal Wireless Service Facility (PWSF) antenna and equipment enclosure box(s) atop the street light pole at 1509 Shrader Street. This appeal is made on behalf of immediately adjacent homeowners at 1509 and 1515 Shrader Street, as well as 112 deeply concerned mapped Neighbors who carefully considered and signed a petition objecting to this specific PWSF Permit Application.

As advised by the Appointments Office, we are on Monday providing the required $300 fee by check, the Letter Received on 19 September, and the following requested Short Statement outlining the reason we are filing the Appeal:

This particular Application does not comply with numerous requirements for obtaining a PWSF Permit, including notably SF Public Works Conditions regarding the pole, SF Planning Department Conditions regarding obstruction, there has not been adherence to the procedure set in place by the City to notify and forthrightly inform residents of the actual work planned nor adequate response time provided for a Hearing, the criteria for objection has been modified during the process, objections and comments have not been responded to, and significant highly relevant and organized objection of the neighborhood has not been addressed. These serious shortcoming in compliance and process for this particular Application, have left residents and the entire neighborhood feeling deceived, unprotected and ignored.

It is our hope that the Board of Appeal would wish, and is intended, to review such severe shortcoming in compliance, procedure, and determination, and that it will fairly and fully consider this particular permit's issuance.

City and County of San Francisco
San Francisco Public Works Bureau of Street Use and Mapping
1155 Market Street, 3rd Floor · San Francisco, CA 94103
sfpublicworks.org · tel 415-554-5810 · fax 415-554-6161

18WR-0033

Wireless Box Permit

Address : 1509 SHRADER ST **Cost: $1,979.00** **Block:1289 Lot: 003 Zip: 94117**

Mobilitie, LLC

Name: Mobilitie, LLC

MANDATORY COORDINATION WITH CONFLICTING PERMITS IS REQUIRED. PERMIT HOLDER SHALL NOT COMMENCE WORK WITHOUT FIRST PROPERLY COORDINATING WITH EXISTING PERMIT HOLDERS AS NOTED ON THE EXCEPTION PAGE(S) OF THIS PERMIT. IF THIS PERMIT CONFLICTS WITH A CITY PROJECT OR OTHER APPROVED PERMIT, THE PERMIT HOLDER OF THIS PERMIT SHALL BE RESPONSIBLE FOR THE PROPER COORDINATION AND EVALUATION OF THE SITE PRIOR TO COMMENCING WORK.

BOARD OF APPEALS
OCT 01 2018
APPEAL # 18-130

Conditions	
Contact247	Refer to Agent
Permit Comments	
Service Address	
Wireless Machine Type	
Wireless Tier	TierB
Permit Pole Location	1289003/Shrader_151
Permit Wireless Antenna	1
Permit Wireless AntMakeModel	Alpha Wireless - AW3477-S1-G
Permit Planning Location	
Permit Tier Comments	
Permit Wireless DPH	Applicant is using equipment for the first time. Attached is an original verified statement from a registered engineer that: (i) potential human exposure to radio frequency emissions from the proposed Personal Wireless Service Facility is within the FCC guidelines; and (ii) noise at any time of the day or night from the proposed Personal Wireless Service Facility is not greater than forty-five (45) dBA as measured at a distance three (3) feet from any residential building facade.
Permit Planning Approval	The proposed Personal Wireless Service Facility is in Zoning Protected Location.
Permit Utility Conditions	Applicant has a valid Utility Conditions Permit
Permit Tier3 Std	
Permit Tier3 Std1	
Permit Tier3 Std2	
Permit Wireless Documents	
Permit_Auto_StartDate_Ind	Y

The undersigned Permittee hereby agrees to comply with all requirements and conditions noted on this permit

Approved Date : 09/19/2018

Applicant/Permitee Date

Printed : 9/19/2018 4:19:43 PM Plan Checker Leoncio Palacios

Special Conditions

Conditions

San Francisco Public Works Conditions:
1. This recommendation is based on no variation from the depicted drawings and/or photo simulation; if a variation is different a re submittal is required. Should the installation vary from said conditions, it should be resubmitted to Department(s) for further review and comment
2. New Poles: no new poles shall be erected or placed in underground districts.
3. Down Guys: Follow all excavation codes to obtain the necessary permits for placement of down guys. Down guy shall avoid crossing conflicting areas but not limited to driveways, curb ramps.
4. Comply with ADA code requirements for Federal, State, local laws. Make sure path of minimum required clear width for accessible path of travel is four feet.
5. At the conclusion of the work, provide a set of as built photos of the installation to the Bureau Street Use & Mapping Permit Office.
6. Maintain a valid certification of insurance annually and forward a copy to the Bureau Street Use & Mapping Permit Office.

San Francisco Department of Public Health Conditions:
1. Ensure that any equipment associated with the pole installation of this antenna does not produce a noise in excess of 45 dBA as measured at three (3) feet from the nearest residential building façade.
2. Ensure that there are no publicly occupied areas within two and a half (2.50) feet from the face of the antenna.
3. Once the antenna is installed, Mobilitie must take RF power density measurements with the antenna operating at full power to verify the level reported in the Hammett and Edison report and to ensure that the FCC public exposure level is not exceeded in any publicly accessible area. This measurement must be taken again at the time of the permit renewal.
4. Mobilitie should be aware that the general public may have concerns about the antenna and potential RF source near their dwellings. Mobilitie should have in place a procedure for taking RF power density levels in nearby dwellings when requested by the members of the general public.
5. In accordance with the San Francisco Public Works Code, Art. 25, Sec. 1527 (a)(2)(C) AT&T is responsible for paying a fee of $210.00 to the San Francisco Department of Public Health for this review.

Please note that this approval and any conditions apply only to the equipment and installation as described. If any changes in the equipment or any increase in the effective radiated power described above are made, a new review by the Department of Public Health must be conducted.

San Francisco Planning Department Conditions:
1. Plant and maintain an appropriate street tree.
2. No exposed meter, meter pan or meter pedestal may be used.
3. Antenna, and all equipment (external conduit, radio relay units, blinders used to shroud bracket bolts [if needed], and mounting mechanisms); except signage, if used for screening, shall all be painted to match the pole and repainted as needed.
4. Cabling below radio relay units shall enter the pole with no more than a five-inch gap between bottom of each radio relay unit and the bottom of the corresponding entry hole on the pole. Conduit connection at pole entry points shall utilize the smallest fitting sizes available. Sealing compounds, if utilized, shall be tidy without excess bubbling and painted to match pole.
5. Remove raised equipment signage (including filling in manufacturer logo indentations on radio relay units/cabinets) and equipment decals that may be visible from sidewalk and dwellings, unless required by government regulation.
6. Utilize smallest RF warning signage allowed (4 x 6 inches); and place the warning sticker facing out toward street, at a location as close to antenna as is feasible. Sticker shall face away from street, when not facing a nearby window within 15 feet. Background color of sticker shall match the pole-mounting surface; and logo and text shall be white.
7. Stack equipment enclosures (not including antenna) as close as allowed by applicable regulation and manufacturer equipment standards.
8. Seams and bolts/screws at antenna and shroud assembly area shall be fabricated and installed in a manner so as to reduce their visibility (e.g. flush mounting screws) from sidewalk level.
9. Not utilize any visible flashing indicator lights or similar.
10. Not obstruct the view from, or the light into any adjacent residential window.
11. New below ground enclosure excavations (vault), if utilized, shall not damage or remove granite curbs. No significant gaps shall be created between vault enclosure lid and primary sidewalk material due to installation. Any other existing historic architectural elements within the public right-of way shall be retained and protected during installation. No carrier logo or carrier name may be placed on the vault lid.
12. Non-essential radio relay unit elements (handle and legs) shall be removed.
13. The installer shall arrange to have Planning Department staff review the initial installation, in order to ensure compliance with the aforementioned conditions (notwithstanding inspections by pole owner and Department of Public Works).
14. Ensure Wi-Fi Access Points and associated wiring, utilized by the City's Department of Technology, are not damaged during installation (if present).
15. Should the installation vary from said conditions, the application shall be resubmitted to the Planning Department for further review and comment.

Permit Addresses

18WR-0033

*RW = [illegible] : Surface Mounted Cab[illegible]s, S/W = Side[illegible] Work, DB = Directio[illegible]ring, BP= [illegible]Bus Pad, [illegible] Concrete for [illegible]y Pull Boxes and Cu[illegible]ps
Green background: Staging Only

Num[illegible]locks: 1 Total repair s[illegible]0 sqft Total Streetspace:0 Total S[illegible]: sqft

ID	Street Name	From St	To St	Sides	*Other	Asphalt	Concrete	Street Space Feet	Sidewalk Feet
1	SHRADER ST	17TH ST	CARMEL ST	[illegible]	RW : False SMC : False S/W Only : False DB: False BP: [illegible] UB: False	0	0	0	
	Total					0	0	0	

Exceptions

18WR-0033

Street Name	From St	To St	Message	Job	Contact	Dates
SHRADER ST						
	[illegible]	CARMEL ST -	Conflict with existing Street Use Permit.	13MSE-0351	Refer to Agent - Refer to Agent	

No Diagram submitted

BRIEF(S) SUBMITTED BY APPELLANT(S)

Neighbors of Upper Cole Valley
c/o 1509 Shrader St
San Francisco, CA 94117

24 Oct 2018

City & County of San Francisco Board of Appeals
1650 Mission St, Suite 304
San Francisco, CA 94103

APPEAL #18-130: Issuance of PWSF Site Permit No. 18WR-0033

Dear San Francisco Board of Appeal Members,

Dispute at Issue: Application No. 18WR-0033 does not comply with requirements and Conditions for obtaining a Personal Wireless Service Facility (PWSF) Permit.

Summary/Outline of Arguments: This particular Application did not comply with numerous requirements for obtaining a PWSF Permit, most notably SF Public Works Conditions regarding the pole, SF Planning Department Conditions regarding obstruction, and the Department of Health report on safety of RF equipment. There was poor adherence to the procedure set in place by the City to notify and forthrightly inform residents of the scale of work planned and very inadequate notice and response time provided for a Hearing. The criteria for Objection have been modified during the process, many objections and comments have not actually been considered or responded to. Significant, highly relevant, organized objection of 112 unanimously aligned neighbors has not been addressed. These serious shortcoming in

compliance and process have left residents and the entire neighborhood feeling deceived, unprotected, unheard or ignored.

Action we seek by the Board:

Determine that Mobilitie's entitlement to a Permit be denied* for this particular location.

**If the Permit is not denied and the new pole and antenna are erected, we ask for a new Condition applied to the Permit requiring the very large mid-pole equipment cabinet be significantly reduced in size, moved to a different less view-obstructive pole or undergrounded in its entirety.*

Neighbors of Upper Cole Valley understand and respect the City of San Francisco's objective to have a process to approve the use of appropriate existing light poles in the City for 5G cell sites. We also recognize significant prior Planning Department effort to streamline the appearance of certain Telcom Co pole designs. However, from our perspective as a group of 112 residents facing this particular site and equipment, we have watched an Applicant and City departments inexorably moving ahead toward *their* objective to issue the previously-approved Permit unchanged, and not protecting, listening to or considering affected SF residents' concerns. The Applicant and City departments have clearly not complied with their own process or the Permit's explicitly stated Conditions. Often these deficiencies overlap and the sheer quantity and sentiment of neighborhood objection has grown accordingly. Much of that is captured in Exhibits (1-19) for reference, but for the purpose of the Appeal, we will attempt to concentrate our Arguments and ask the Board's consideration and action primarily due to the Applicant and the Departments' non-compliance to process and Conditions. The Arguments are:

1. **Poor or non-adherence to the City's procedure to properly notify residents and provide adequate response and (DPW) Hearing preparation time**

   a. All Residences within 150 feet were to be notified of the tentative permit. Many within that radius were not notified by mail and were completely unaware of the cellsite being proposed during our own later Open Letter / Signed Petition process. Four residents less than 50' away at 1504/1506 Shrader and 4901/4903 17th St documented (Exh 0) and advised the City they were not properly notified.

   b. The Notice was poorly affixed to the <u>single</u> pole (photo'd). This compounded the difficulty for any others in the neighborhood to get information as Mobilitie's info packet either fell off or was blown off.

   c. The Notice letter (Exh 1) was dated 5/25/18, but was not received until June 1st or later by residents and in letters that were <u>not</u> post-mark-dated. This effectively made the Notice's timeframe of "20 days…to protest" at least one week shorter.

   d. One resident at 138 Frederick was improperly advised by DPW that she could not Protest or write a Comment letter on a PWSF Permit Application if she did not receive a Notice in the mail at the initial 150' radius stage.

   e. We believe DPW's <u>very</u> limited, 6/28/18 email distribution (Exh 2) of Public Works Order No. 187977 only went to residents who had emailed in a Protest. This did not make the contained/notified "public hearing" "Public" at all.

   f. That email's required 10-day notice of the 7/9/98 Hearing fell <u>during the short Fourth of July Week</u>. We were allowed <u>only 4 working days</u>, and many residents --particularly

families with children-- were on their annual vacation. This severely limited the few recipients' ability to inform or position other concerned residents to write Comments or attend the DPW Hearing. The overall appearance for our group and for the City was bad. It left the informed residents embarrassed, and our uninformed neighborhood upset, and everyone started to wonder if our rights to a reasonable and timely approval process were protected.

2. **Failure of Mobilitie, LLC to forthrightly inform residents of the scale of work planned**

   a. Our review of Mobilitie's design following a City Records Request revealed significant information not evident in the 5/25/18 Notice and photo simulation and provided to Residents. Equipment sizes are **significant** (Exh 3), particularly the large Equipment Enclosure which, like their new taller pole (see item 3 below), was never called out in the simulation. Virtually all neighbors were completely unaware of the Equipment Box affixed at midpoint on the pole. At **35Hx15½Wx16¾D", Mobilitie's Equipment Box** is by far the largest of <u>any</u> of the Telecom carrier designs approved by SF. Residents believed the **upper Antenna** in Mobilitie's simulation --**the single called-out (arrowed) item (Exh 4)** -- was the <u>only</u> visual change they were to review. "I thought this was just about that little thing on the top?" was the <u>common</u> reaction. Hardly "small cell", the 5'4½Hx10¾W" Upper Antenna is taller than many residents.

   b. 5/25/18 and 9/13/18 Notices advised residents of only "One (1) antenna". Mobilitie's plans include a **second** antenna attached to the Relay (mid-level box).

   c. In the Frequently Asked Questions (FAQ) (Exh 5) provided, residents were assured: "Do these systems generate **Noise**? **No**. The proposed enclosures use passive cooling,

without cooling fans." However, Mobilitie's plans include **THREE** fans in their large mid-pole cabinet, which do generate noise/buzz.

d. Photo simulations were low resolution, with the Equipment Box situated to almost appear to be a window (Exh 4) or, at great distance, to be part of Sutro Tower (Exh 6)! Many residents mentioned the oddly low angle of the 2nd photo, which suggested Sutro Tower (half a mile away and over 1/10 of a mile West) was on Shrader St (Exh 6A). All this combined to confuse residents about the visual impact of this large equipment installation, or what the PWSF would actually look like at eye-level to residents.

e. Of great concern was the **Warning Label** (Exh 7) alerting short-stay pole workers of the risk of RF radiation "exceed(ing) the general public exposure limit". This left residents a sense of "We get told it's not dangerous and we're exposed 24/7, but the Telecom workers can read on the box that it's dangerous, and avoid exposure".

In sum, Mobilitie's materials left residents feeling under and short-noticed, mis-informed, wondering who protects their interest in the City's process, and upset.

3. Application does not comply with Public Works Condition #2 – No New Poles

Residents were explicitly assured, in both the 5/25/2018 and 9/13/2018 Department of Public Works (DPW) Notices that Permit approval includes (Exh 8) **Condition #2**:

No new poles shall be erected or placed in underground districts

a. Residents strongly support this Condition to prevent Telecom companies from using this lightpoles-for-5G program as an opportunity to install larger/higher poles as bases for their antennas. This is especially important in underground districts, where residents and the City have already incurred the cost of undergrounding wires and replacing old timber poles with modern steel ones like those already on Shrader Street. Residents of

Upper Shrader, Carmel St, Upper Cole, take pride that all their pole-mounted utilities were de-cluttered and undergrounded in the mid 1990's. They paid substantial fees (equivalent fees in 2018 dollars would be $15,000-$45,000) for their individual underground connection work. Residents strongly support this Condition to also prohibit public agencies from using the PWSF program to require pole re-upgrades in these already upgraded underground districts. The City has much more antiquated infrastructure it should be changing -- like the aerial-wired timber lightpole just 50' away on 17th St, a more urgent visual and safety priority.

b. Despite this clear Condition of the Permit, Mobilitie's detailed design documents refer to the installation of a "**NEW**" galvanized street light pole. **The new pole is 2' 3" taller** than the existing galvanized steel pole. Mobilitie **also plans deep excavation work for a very large new concrete base beneath it, nearly six feet below ground** -- three times deeper than the existing steel pole's foundation. **None** of this expanded size/scope of work has been disclosed publicly to residents. As to the deep excavation, we note both adjacent homeowners have paid previously to have their sewer mains re-done in this very area.

4. **Application does not comply with Planning Department Condition #10** (Exh 9):

shall "not obstruct the view from, or the light into any adjacent residential window"

a. This Condition of Approval is written as a very clear, almost comforting-to-residents part of the 5/25/2018 DPW Notice. This criteria for objection was straightforward and appeared to protect residents/neighbors in this excellent-views, 100%-residential street. However, the criteria for objection was modified substantially later, with the baseline continually shifted during the permit approval process.

b. Responses to resident's protest letters were essentially form-letters. One received (7/2/18, Exh 10) states "Planning may only determine if a proposed facility will significantly obstruct views from and/or light into surrounding residential windows." (The words "significantly" as well as the "and" condition, did **not** appear in the 5/25/18 DPW Notice.) "Planning Department shall only consider views of buildings, open spaces, natural vistas, or parks from the Public Rights-of-Ways". "Planning Department shall **not** take into account views from private properties". The simplistic, blanket approach to **everyone** was that because Planning had "streamlined design of the (standard) wireless 'attachments', (**ANY**) proposed wireless facility (next to **ANY** home) would not substantially obstruct views from **a** window, or block light into **a** residential window." There would be no site/specific evaluations. Residents were wasting time objecting; there was **no** consideration.

c. At the 9Jul18 Hearing, the baseline moved again especially as regards Zoning. A resident objecting to another PWSF Permit had just purchased a condo in a much denser, side-street location with a light pole just a few feet away and centered in a very small upper level bathroom window looking onto a 5-story apartment building. Planning Dept officials responded he had to accept the proposed antenna addition atop the pole it as it did not "significantly" obstruct his view – though everyone in the Hearing Room could see that it seriously obstructed his view. Later the same Planning officials said when our group came up; "We just rejected the objection to a site less than 4 feet from his window, why are you complaining about 14 feet?"

d. We learned later, only after obtaining copies of the Planning Department's internal report, that Shrader street is classed with **"Excellent Views"** in the City's General Plan.

Our City Planning Department appeared to now give **NO** differentiation in consideration for fully-residential one- and two-family home (RH2) zoning, nor areas formally designated with "Excellent Views" vs much higher-density areas on a side street with no real views. What do Shrader Street's high-quality designations mean and who is tasked with protecting them, if not Planning? This was another troubling departure to apparently pursue $4000/month revenue for the City, vs their departmental responsibility to protect San Franciscans' built environment and quality of life.

5. **Department of Public Health has incorrectly determined this Application complies with the Health Compliance Standard**

   a. The Department of Health (DPH) describes in its 4/24/18 Report (Exh 11) DPH__18WR-0033 1509 Shrader St) a different model of equipment for the mid-level antenna, a "Fastback Networks Model IBR 1300 Microwave antenna". However, Mobilitie's documents show it plans to install an "Airspan Model iRelay 460 antenna" in its large, mid-level equipment enclosure.

   b. DPH's Report closes with the clear statement that "approval and any conditions apply only to the equipment…described. If any changes in the equipment…are made, a new review by the Department of Public Health must be conducted."

6. **Other concerns that support our objection to this PWSF location**

   a. Reduced Property Value Our Upper Cole Valley buried-utilities street/neighborhood would suffer harm if the large pole-borne equipment box is installed, on an even taller pole, directly in front of our Excellent Views bay windows/bedrooms/studies and living rooms. This indeed "detract(s) from the streetscape-…that defines (this) individual neighborhood" and that would adversely affect our home's and our neighborhood's

value. Two SF-voter/Realtors we have worked with, including one who helped purchase in this area specifically because of their client's strong desire to be on this street *because of its buried utilities* have confirmed that 10-20% diminished home value is not at all unreasonable.

b. Fire Risk is a key concern. Our understanding is that Mobilitie must only obtain a $1 million bond for damage resulting from one of their sites catching fire, with any other damage borne by the adjacent *homeowners*. *All* the homes near this particular pole *each far* exceed that $1 million bond value and we deserve to express our great concern on lack of fire liability thinking or cover. Despite a metal pole, high-voltage electrical and electronic equipment is prone to fire. Just because there aren't many 5G PWSF sites yet, we can/must look to the larger cell site history to find a number of very dangerous and damaging fires (Google search "cell site fires"). Given PG&E's presumed continued role in these light poles, and the multi-billion dollar liability they recently incurred (which is only at the lowest evaluated figure) in the Northern California wildfires due to their equipment and maintenance neglect, we have heightened concern these risks are under-considered and under-funded by Mobilitie and the City. This Permit assumes residents will cover the greatest loss risk. We do not agree to that.

c. Revenue Drivers for the City hopefully do not undermine the rights of residents to good, fair process as well as their long-term quality of life. This is a growing concern, the more we learn of the money involved for the City in this 5G buildout, and the more we saw of poor representation for the neighborhood residents. We hope the City of San Francisco, through its Board of Appeal, will carefully consider how Application No. 18WR-0033 was approved.

d. Differential Legislation and City of San Francisco Treatment We were concerned to learn of the health stance of firefighters in California, and in San Francisco to proximity to PWSF sites. We now know, and do not understand why only these professionals have been listened to by state legislators. Further that the City of San Francisco will not subject its firehouses and firefighters to the same RF and EMF risks of a PWSF, that it is apparently willing to subject its residents to (especially our children on Shrader Street). Because of the very limited duration of our Protest and Comment period right in the short Fourth of July week (one of their 2 busiest periods of the year) fewer of our SF firefighter neighbors were able to meet with us and could only do so off-duty. Nonetheless, FIVE signed the petition requesting denial of this Permit.

e. Poor Timing of Notice and Comments Period relative to Schools Similarly, our very close neighborhood school, Grattan Elementary, was not in session. Nonetheless, we did consult with our Principal, Catherine Marie Walter, who signed the Open Letter Protest (signature #40, p3) to request denial of this particular Permit Application.

f. Medical Experts Next Door. The second closest resident to the proposed site is an MD and his spouse, an RN/PhD. They have in a more qualified way articulated a number of our entire group's health concerns for long-term exposure, especially to our children who sleep and study 14-20ft immediately adjacent to the proposed equipment and its two RF and EMF radiation emitters. While we understand the **very dated, non-medically ascertained guidelines of the 1996 FCC Comms Act**, we are hopeful our City of San Francisco will exercise prudence in its own assessment of what it wants to permit this close to the residents it directly represents. Bern Shen and Ann Williamson's

written letter to DPW (Exh 12) and you and their suggestions are very important Comments.

g. No value to residents from this Carrier. It's now clear that Mobilitie is working for Sprint in this particular PWSF buildout, though this information was also **not** disclosed in the 5/25/18 or 9/13/18 public Notices. It is relevant that Sprint has only an approximate 20% market share and is the least likely of 4 Carriers to survive. Sprint/Mobilitie uses by far the largest, most visually offensive mid-level equipment enclosure (Exh 13 & 14) of **any** of the SF-approved PWSF designs (we believe it was the last design Planning "streamlined", if at all). Our neighborhood will receive no direct value from this particular PWSF as confirmed by the 112 mapped signatures requesting denial of this Permit.

7. Appeal Summary – providing our Petition now to the Board of Appeal

a. This particular PWSF Application did not comply with numerous requirements for obtaining the Permit, most obviously the Public Works Condition regarding the pole. It also did not comply with the Planning Department Condition regarding no obstruction -- the objection criteria for which was repeatedly modified to residents. The Department of Health report on safety of RF equipment is also incorrect. There was demonstrably poor compliance to procedures established by the City to notify residents, who were also not forthrightly informed of the true scale of work planned by the Telecom Applicant. Very inadequate response time was provided to residents to support a real public Hearing.

b. Despite all this, the Neighbors of Upper Cole Valley have reviewed, carefully researched, commented, written and respectfully requested help and action by their City

departments each step of the way to also help protect their environment, interests and quality of life, not just the objectives of the Telecom Applicant. The Signature Map and Petition (Exh 15) demonstrates complete alignment of the entire neighborhood (112 neighbors) surrounding this particular PWSF location. The signature statement was also specific, requesting to reject (deny) this particular Permit. Signatories are all adult SF residents, five SF Firefighters from Fire Companies 12 & 6 who protect them, and the Principal of Grattan Elementary. In summary: 62 on Shrader Street, 33 on bounding Streets (17th, Cole, Stanyan and Carmel), and 11 other Cole Valley.

We greatly appreciate the City of San Francisco Board of Appeal's review of our Appeal of Issuance of this particular PWFS Site Permit. We look forward to a fair and impartial Review and Hearing on November 14th, and hope we can convince all of you to deny this particular Permit on multiple grounds.

Respectfully submitted,

Neighbors of Upper Cole Valley

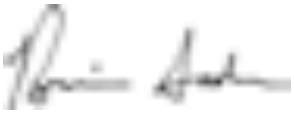

Brian D Sedar (Agent for the Appellant)

Attachment (Exhs 1-19)

EXHIBIT TABLE OF CONTENTS -

APPEAL #18-130

Exhibits 0

Brigitte Bogert & Hemang Kapasi
4901 17th St
San Francisco, CA 94117

July 9th, 2018

San Francisco Public Works
Bureau of Street-Use & Mapping
1155 Market Street 3rd Floor
San Francisco, CA 94103

Dear Sir or Madam,
We have received notice of a proposal to for a personal wireless facility site permit within approximately 45 feet of our house and bedroom.

We object to the placement of this wireless facility based on the following points:

1. Proper notification of residents and public:
2. Aesthetic concerns
3. Risks
4. Reduction of property values

1. **Proper notification of residents and public**

San Francisco Public Works Code Article 25, Sec. 1512 states that Mobilitie "shall post a copy of the notice in conspicuous places throughout the block face where the proposed Personal Wireless Service Facility is to be located." Mobilitie signed an affidavit that they had put up signs. We looked for such signage on the 1500 block of Shrader on June 12th and 13th and failed to find a single sign. We have video footage/photos of the street taken on June 13th attesting to this. This is of huge concern as it seemed some were completely unaware of the situation. Indeed, one of the owners of the house directly across the street from 1509 Shrader—was completely unaware of the placement of the cell tower at the time we ran into her. It is not acceptable for people who live or work regularly on the street to not be properly warned of the pole. Warning signs should have been placed on every tree and light post and parking sign.

2. **Aesthetic concerns**

The addition of several feet in height to an existing lamp pole (resulting in a pole over 31 feet in height) as well as the addition of the radio box and down guy all detract from the aesthetics of the street. Radio equipment housing and large poles rising above trees are ugly and not something we want to see on a daily basis as we walk up to neighboring Tank hill. We purposely chose this area because there are no unsightly electrical wires crossing the street, few tall electric poles and street lights, etc. The addition of a large wireless facility pole and box detracts from the loveliness of the neighborhood.

3. **Risks and Liability**

Having such a tall pole with heavy weight at the top is of risk to the neighboring houses. For example, what magnitude earthquake can the pole withstand particularly with additional weight and equipment on top of it that it was not originally meant to hold?

Indeed the overloading of poles caused three poles to topple during high winds, sparking a huge fire in Malibu in 2007 that damaged 3,386 acres and damaged dozens of vehicles and properties. These poles were jointly owned by three wireless companies—AT&T Mobility, Verizon Wireless, and NextG Networks—as well as SoCal Edison.[1]

In the event of some such catastrophe, who will be liable for the accompanying damage? This pole will be at least 31 feet in height, and thus if it falls, it is well within striking range of several houses as well as cars. Mobilitie is only liable for $1 million of property damage in a neighborhood that is one of the most expensive areas per square foot in San Francisco and in which most properties cost a minimum of $1.5-2 million.

4. **Reduction of property values**

Our biggest concerns is the placement of a wireless facility so close to our house may lead to reduction of its value. A recent study by the National Institute for Science, Law and Public Policy (NISLAPP) found the following: "Of the 1,000 survey respondents, *94% reported that cell towers and antennas in a neighborhood or on a building would impact interest in a property and the price they would be willing to pay for it. And 79% said under no circumstances would they ever purchase or rent a property within a few blocks of a cell tower or antennas*. And almost 90% of respondents said they were concerned about the increasing number of cell towers and antennas in their residential neighborhood, generally."[2] A separate study *The Impact of Cell Phone Towers on House Prices in Residential Neighborhoods* by S. Bond and K. Wang found that buyers would pay as much as 20% less for properties in close proximity to a wireless pole.[3]
In addition, as mentioned above, the addition of the tower detract from the neighborhood, reducing its charm and again reducing local property values.

Furthermore, a growing body of evidence has suggested that close proximity to such cell phone antennae and towers has negative health consequences. Studies cite negative health effects on people living within up to 300 meters of cell antennae (that is 984 feet, a much larger area and many more people are affected than the required notification of properties within 150 feet of the proposed tower). Negative health consequences range from headaches, sleep disturbances, fatigue and cognitive impairment to more significant concerns such as cancer risks.[4,5,6,7] Many

---

[1] http://articles.latimes.com/2013/may/20/local/la-me-ln-edison-admits-errors-in-malibu-fire-settles-now-top-60-million-20130520

[2] Survey by the National Institute for Science, Law & Public Policy Indicates Cell Towers and Antennas Negatively Impact Interest in Real Estate Properties, *Business Wire,* July 3, 2014.

[3] Bond, S. & Wang, K. The impact of cell phone towers on house prices in residential neighborhoods. *The Appraisal Journal,* 2005.

[4] Abdel-Rassoul G *et al*, (March 2007) "*Neurobehavioral effects among inhabitants around mobile phone base stations"*, Neurotoxicology. 2007 Mar;28(2):434-40.

[5] Khurana, Hardell et al., *"Epidemiological Evidence for a Health Risk from Mobile Phone Base Stations".* Int. J Occup. Envir Health, Vol 16(3):263-267, 2010

[6] Wolf R, Wolf D, (April 2004) "*Increased incidence of cancer near a cell-phone transmitter station"*, International Journal of Cancer Prevention, 1(2) April 2004

[7] Levitt & Lai, *"Biological Effects from Exposure to Electromagnetic Radiation Emitted by Cell Tower Base Stations and Other Antenna Arrays",*Environmental Reviews, 2010

people are already aware of these potential effects on health, and as more become aware or simply concerned, again property value will correspondingly decrease.

Of even greater concern is the impact on children. There are a number of children living in close proximity to the proposed pole. Cole Valley is traditionally considered a very family friend area and many choose to move to Cole Valley for its family friendliness and proximity to good schools. An increasing number of cell phone towers/antenna in nearby proximity may eventually affect the desire of families to move in.

Recently the City of Sebastapol defeated Senate Bill 649, which would have created a state mandated system of cell towers in California for many of the same reasons above. Gov Brown subsequently vetoed the bill. Let us follow the way of Sebastapol and keep our property values up and neighborhoods safer.

Thank you for your consideration.

Sincerely,
Brigitte Bogert & Hemang Kapasi

Exhibit 1

NOTICE OF TENTATIVE APPROVAL OF APPLICATION FOR A PERSONAL WIRELESS SERVICE FACILITY SITE PERMIT

[illegible]

[illegible]

[illegible]

[illegible]

[illegible]

[illegible]

[illegible]

Public Works has tentatively approved the Application No. [illegible] submitted by Mobilitie, LLC for a Personal Wireless Service Facility Site Permit in the vicinity of [illegible] Divisadero Street. The approval contains certain conditions that are attached to this letter. These conditions may be modified prior to the issuance of a Personal Wireless Service Facility Site Permit at this location.

The equipment to be installed at this location include: One (1) antenna, one (1) equipment enclosure housing UE Relay and radio.

If approved, Mobilitie, LLC may install the permitted Personal Wireless Service Facility at this location. A photo simulation of the proposed Personal Wireless Service Facility is attached hereto.

Pursuant to San Francisco Public Works Code § 1013, you have 30 days from the later of the date on this notice or the postmark to protest the Application.

To submit a protest or comment on the Application please visit the Public Works website at the following address: [illegible] click "Comment on Permit" and enter "[illegible]" or send to the following address:

San Francisco Public Works
Bureau of Street use and Mapping
1155 Market Street
San Francisco, CA 94103
Attn: Wireless Permit Protests

If a timely protest is submitted, Public Works will hold a public hearing to determine whether to grant the Application. Public Works will notify you at a later date of the date and time for the hearing.

The protest must be based on one or more of the following grounds:

1. The Department of Public Health incorrectly determined that the Application complies with the Public Health Compliance Standard (see Public Works Code § 1007).

2. The Planning Department incorrectly determined that the Application meets the applicable Compatibility Standard (see Public Works Code § 1008).

3. The Application does not comply with any other requirement for obtaining a Personal Wireless Service Facility Site Permit.

4. The Applicant intends to modify the Personal Wireless Service Facility after the Permit is issued in a manner that would not comply with the applicable Compatibility Standard.

If the proposed location for the Personal Wireless Service Facility is in a residential or neighborhood commercial zoning district your protest may include a claim that the proposed Personal Wireless Service Facility obstructs the views from or blocks the light into any adjacent residential windows (See Public Works Code § 1008(b)(2)). If your protest contains such a claim, please include with your protest photographs depicting the potential obstruction of the views from or the blocking of the light into your windows so that the Planning Department and/or hearing officer can evaluate this aspect of your protest. The Planning Department may contact you to ask permission to enter into your residence to investigate your claim. If the Planning

Department or hearing officer agrees with your concerns, the City may add certain conditions to its approval of the Application to ameliorate those concerns.

The Applicant does not know at this time whether it will file an Application for a permit to modify the proposed Personal Wireless Service Facility at any time during the term of the Personal Wireless Service Facility Site Permit.

In order to receive correspondence from Public Works, the Applicant, and other interested parties please include with your protest all of the following information: Street address, daytime telephone number, and email address (if available).

To obtain additional information concerning the Application, the tentative approval, or the protest you may contact James Singleton of MuniFire at 650-414-0044 or JSingleton@MuniFire.com. **[illegible]**

For more information on Personal Wireless Service Facilities generally you can also visit www.sf-planning.org/wireless.

Public Works Wireless Program

PERMIT CONDITIONS

Approval of the proposed Personal Wireless Service Facility Site Permit has been recommended by San Francisco Public Works (Bureau of Street-Use and Mapping), San Francisco Department of Public Health, San Francisco Planning Department.

The tentative approval includes the following condition(s) that have been accepted by Applicant:

San Francisco Public Works Conditions:

1. This [redacted] variation is different a re-submittal is required. Should the installation vary from said conditions, it should be resubmitted to Department(s) for further review and comment.
2. New Pole[redacted] shall be located or placed in underground district.
3. Down Guys. Follow all excavation codes to obtain the necessary permits for placement of down guys. Down guy shall avoid crossing conflicting areas but not limited to driveways, curb ramps.
4. Comply with ADA code requirements for Federal, State, local laws. Make sure path of minimum required clear width for accessible path of travel is four feet.
5. At the conclusion of the work, provide a set of as built photos of the installation to the Bureau Street Use & Mapping Permit Office.
6. Maintain a valid certification of insurance annually and forward a copy to the Bureau Street Use & Mapping Permit Office.

San Francisco Department of Public Health Conditions:

1. Ensure that any equipment associated with the pole installation of this antenna does not produce a noise in excess of 45 dBA as measured at three (3) feet from the nearest residential building façade.
2. Ensure that there are no publicly occupied areas within two and a half (2.50) feet from the face of the antenna.
3. Once the antenna is installed, Mobilitie must take RF power density measurements with the antenna operating at full power to verify the level reported in the Hammett and Edison report and to ensure that the FCC public exposure level is not exceeded in any publicly accessible area. This measurement must be taken again at the time of the permit renewal.
4. Mobilitie should be aware that the general public may have concerns about the antenna and potential RF source near their dwellings. Mobilitie should have in place a procedure for taking RF power density levels in nearby dwellings when requested by the members of the general public.
5. In accordance with the San Francisco Public Works Code, Art. 15, Sec. 1527 (a)(2)(C) Mobilitie is responsible for paying a fee of $210.00 to the San Francisco Department of Public Health for this review.

Please note that this approval and any conditions apply only to the equipment and installation as described. If any changes in the equipment or any increase in the effective radiated power described above are made, a new review by the Department of Public Health must be conducted.

San Francisco Planning Department Conditions:

1. Plant and maintain an appropriate street tree.
2. No exposed meter, meter pan or meter pedestal may be used.
3. Antenna, and all equipment (external conduit, radio relay units, blinders used to shroud bracket bolts [if needed], and mounting mechanisms): except signage, if used for screening, shall all be painted to match the pole and repainted as needed.
4. Cabling below radio relay units shall enter the pole with no more than a five inch gap between bottom of each radio relay unit and the bottom of the corresponding entry hole on the pole. Conduit connection at pole entry points shall utilize the smallest fitting sizes available. Sealing compounds, if utilized, shall be tidy without excess bubbling and painted to match pole.
5. Remove raised equipment signage (including filling in manufactures logo indentations on radio relay units cabinets) and equipment decals that may be visible from sidewalk and dwellings, unless required by government regulation.
6. Utilize smallest RF warning signage allowed (4 x 6 inches), and place the warning sticker facing out toward street, at a location as close to antenna as is feasible. Sticker shall face away from street, when not facing

a nearby window within 15 feet. Background color of sticker shall match the pole-mounting surface, and logo and text shall be white.

7. Stack equipment enclosures (not including antenna) as close as allowed by applicable regulation and manufacturer equipment standards.
8. Seams and bolts/screws at antenna and shroud assembly area shall be fabricated and installed in a manner so as to reduce their visibility (e.g. flush mounting screws) from sidewalk level.
9. Not utilize any visible flashing indicator lights or similar.
10. [redacted]
11. New below ground enclosure excavations (vault), if utilized, shall not damage or remove granite curbs. No significant gaps shall be created between vault enclosure lid and primary sidewalk material due to installation. Any other existing historic architectural elements within the public right-of-way shall be retained and protected during installation. No carrier logo or carrier name may be placed on the vault lid.
12. Non-essential radio relay unit elements (handle and legs) shall be removed.
13. The Installer shall arrange to have Planning Department staff review the initial installation, in order to ensure compliance with the aforementioned conditions (notwithstanding inspections by pole owner and Department of Public Works).
14. Ensure Wi-Fi Access Points and associated wiring, utilized by the City's Department of Technology, are not damaged during installation (if present).
15. S[redacted] the application shall be resubmitted to the Planning Department for further review and comment.

mobilitie

Existing

Proposed

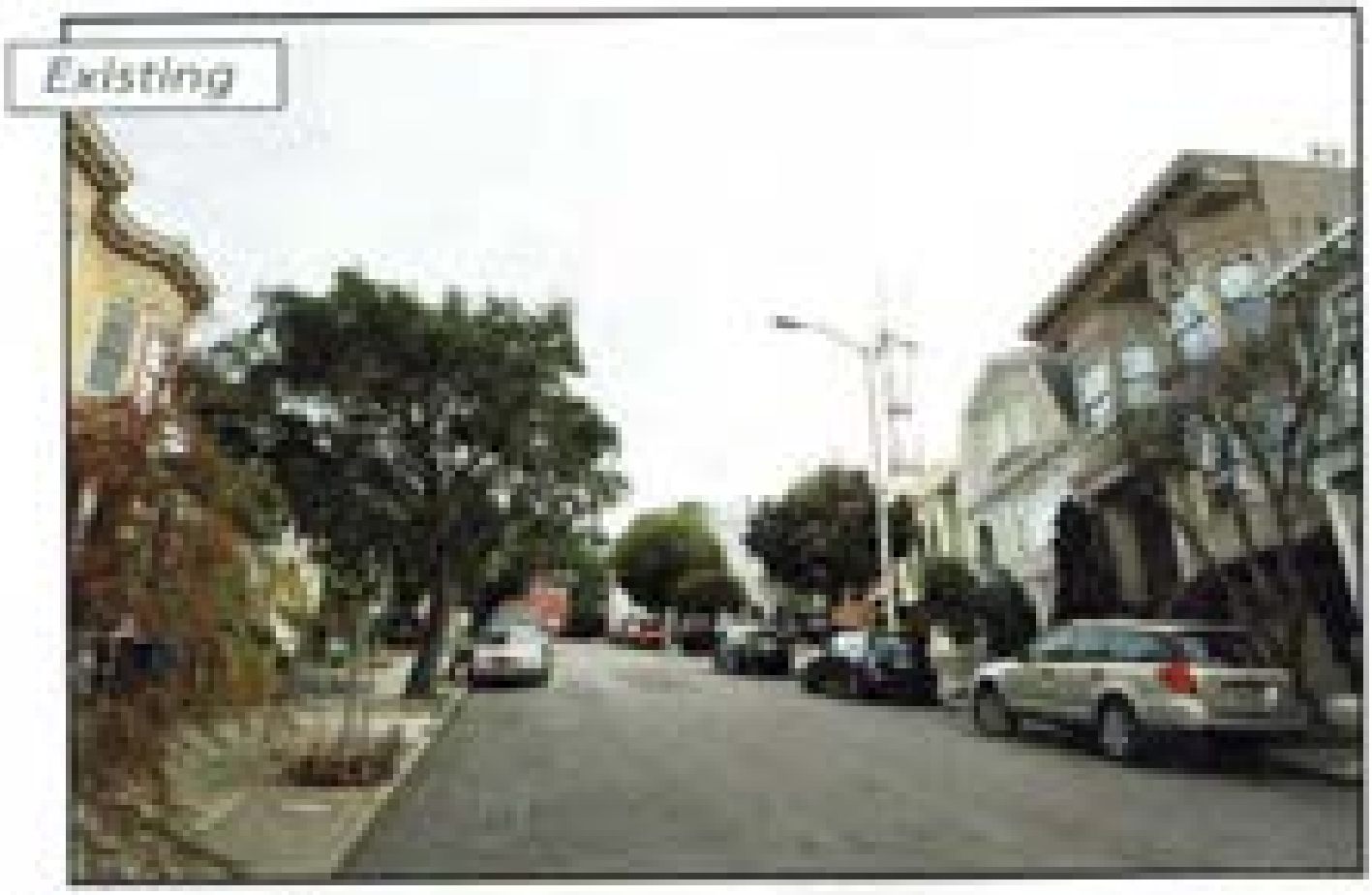

View from Brooder Street looking south at site

mobilitie

Exhibit 2

From: DPW-Wireless-Program <DPW-Wireless-Program@sfdpw.org>
Sent: Thursday, June 28, 2018 9:46 AM
Subject: Public Hearing for Personal Wireless Service Facility Site Permit Application 18WR-0033

Hello,

There will be a hearing for the above-referenced application on 7/9/18. Please see the attachment for additional information.

Thank you,

Bureau of Street Use and Mapping
San Francisco Public Works
City and County of San Francisco

City and County of San Francisco

Mark Farrell, Mayor
Mohammed Nuru, Director

San Francisco Public Works
Office of the Deputy Director & City Engineer, John Thomas
Bureau of Street-Use & Mapping
1155 Market Street, 3rd Floor
San Francisco Ca 94103
(415) 554-5810 ■ www.SFPublicWorks.org

Jerry Sanguinetti, Bureau Manager

Public Works Order No: 187977

Pursuant to Public Works Code Article 25 and Public Works Order 184504, Public Works will conduct a public hearing to consider the protests filed with respect to the issuance of tentative approvals for the following applications for Personal Wireless Service Facility Site permits:

Permit #	Company	Address
17WR-0306	ExteNet Systems, Inc.	184 FRANCISCO ST
18WR-0033	Mobilitie, LLC	1509 SHRADER ST
18WR-0060	AT&T Mobility	1178 CLAYTON ST

The public hearing will be held at:

City Hall
1 Dr. Carlton B. Goodlett Place, Room 400
9:00AM, Monday, July 9, 2018

All interested parties are invited to attend. Any interested party may also submit written comments regarding the subject matter to:

DPW-Wireless-Program@sfdpw.org, OR
San Francisco Public Works
Bureau of Street-Use & Mapping
1155 Market Street 3rd Floor
San Francisco, CA 94103
Attention: Wireless Facility Program

If received the day before the hearing, written comments shall be brought to the attention of the Hearing Officer and will be made a part of the official public record of this proceeding.

Exhibits 3 - 7

Exh 3 – "Small Cell Site" Equipment is <u>Not</u> Small

- comparison to young Resident sleeping 14'10" away
- Mobilitie LLC notice photos did not point out Equipment Shroud

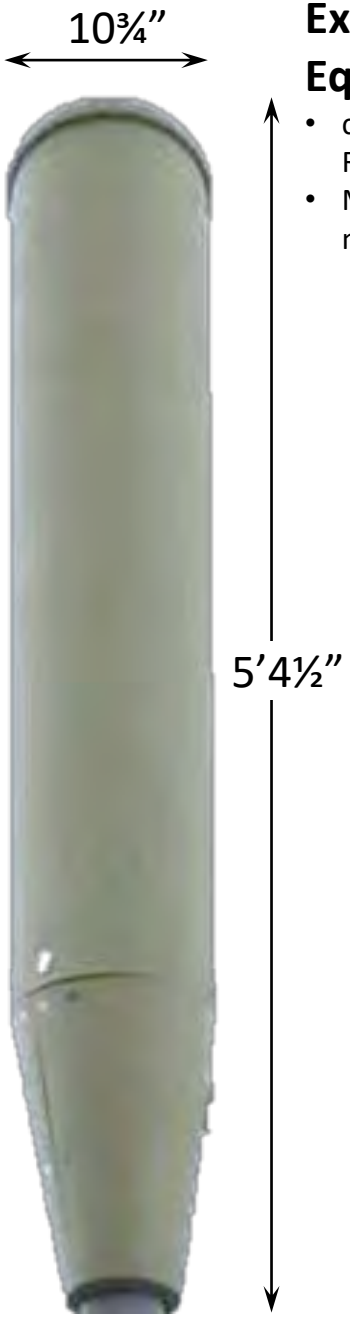

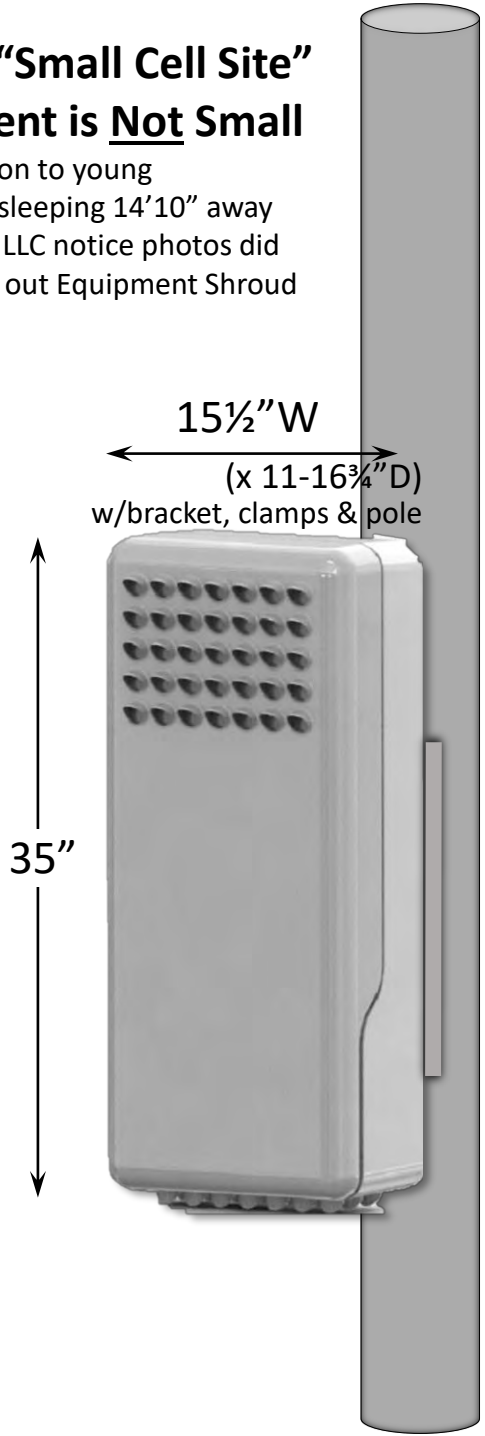

Exh 4 – Deceptive Simulation 1

- Single called out item is upper Antenna
- Camera angle, color fade Equipment Box into house
- Equip Box not called out
- New, Higher Pole not called out

Exh 5 – No Noise

Noise: What Residents/Neighbors were Told:

Noise: What has been Approved without Residents/Neighbors knowledge:

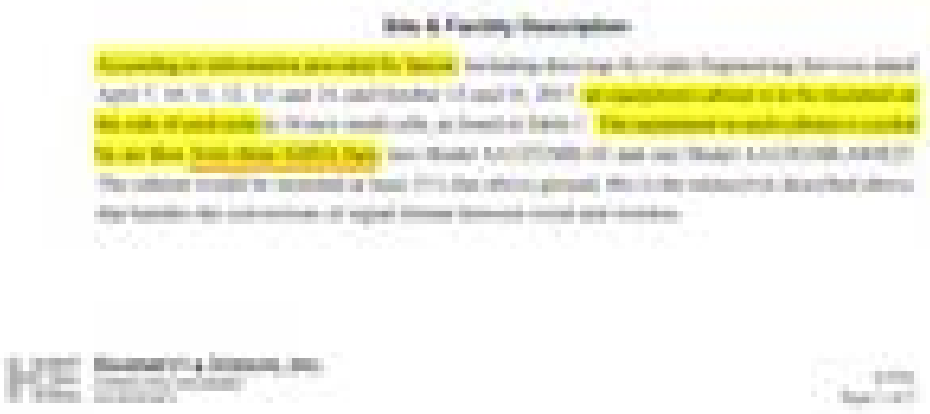

Exh 6 – Notice Photo Deceptions (re-obtained thru Record's Request)

- Camera down next to street, see Fig 4
- Equip Box not called out

Exh 6a – Without Notice Photo Deceptions

- Camera at natural, eye level
- Sutro Tower is 1/2 mile away
- Equip Box called out

Exh 7 – Other Concerning Details not Disclosed in Mobilitie's Notice –

- 3x4" notice of RF emissions danger only short-stay pole workers see…

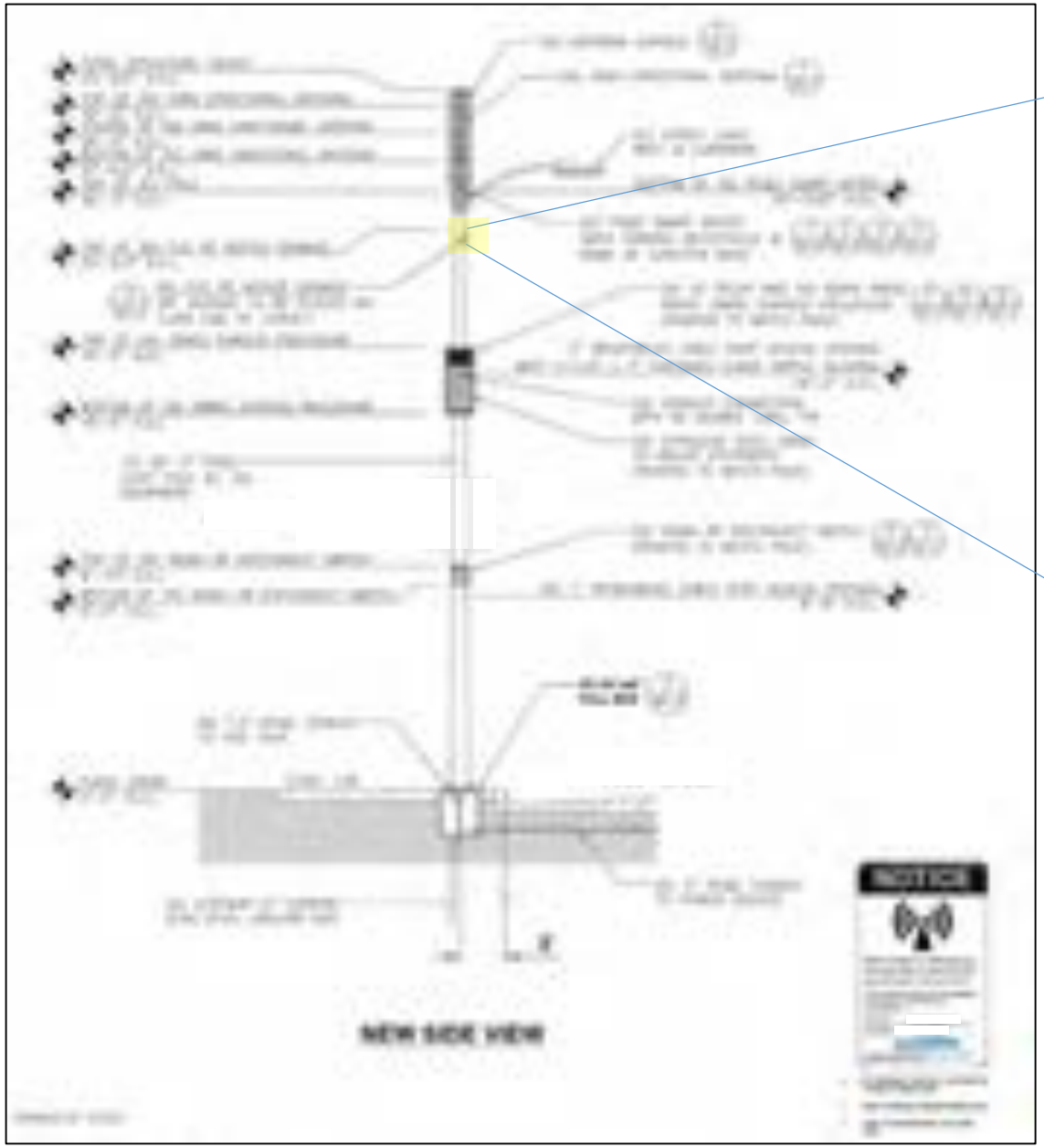

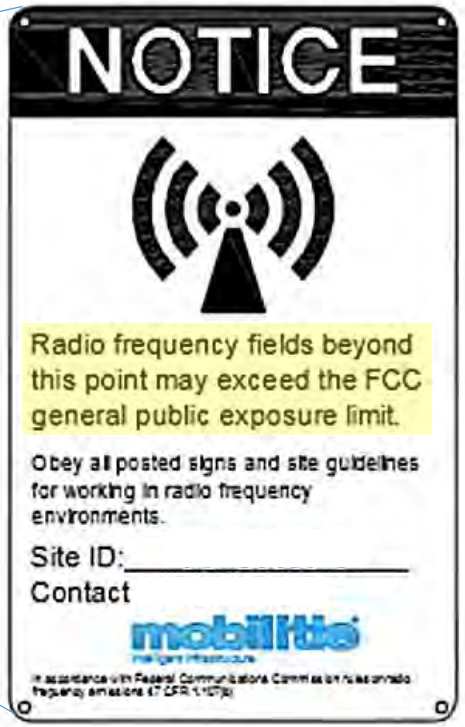

- RF WARNING SIGN WILL BE PAINTED TO MATCH NEW POLE.
- SIGN TO BE NO LARGER THAN 3"X 4".
- SIGN TO BE MOUNTED ON CURB SIDE.

Exhibits 8 & 9

PERMIT CONDITIONS

Approval of the proposed Personal Wireless Service Facility Site Permit has been recommended by San Francisco Public Works (Bureau of Street Use and Mapping), San Francisco Department of Public Health, San Francisco Planning Department.

The tentative approval includes the following condition(s) that have been accepted by Applicant:

San Francisco Public Works Conditions:

1. This [redacted], if a variation is different a re-submittal is required. Should the installation vary from said conditions, it should be resubmitted to Department(s) for further review and comment.
2. New Poles [redacted] must be erected or placed in underground ductbank.
3. Street Guys: Follow all excavation codes to obtain the necessary permits for placement of street guys. Street guy shall avoid crossing conflicting areas but not limited to driveways, curb ramps.
4. Comply with ADA code requirements for Federal, State, local laws. Make sure path of minimum required clear width for accessible path of travel is four feet.
5. At the conclusion of the work, provide a set of as built photos of the installation to the Bureau Street Use & Mapping Permit Office.
6. Maintain a valid certification of insurance annually and forward a copy to the Bureau Street Use & Mapping Permit Office.

San Francisco Department of Public Health Conditions:

1. Ensure that any equipment associated with the pole installation of this antenna does not produce a noise in excess of 45 dBA as measured at three (3) feet from the nearest residential building facade.
2. Ensure that there are no publicly occupied areas within two and a half (2.5) feet from the face of the antenna.
3. Once the antenna is mounted, Mobilitie must take RF power density measurements with the antenna operating at full power to verify the level reported in the Kathrein and Kaiser report and to ensure that the FCC public exposure level is not exceeded in any publicly accessible area. This measurement must be taken again at the time of the permit renewal.
4. Mobilitie should be aware that the general public may have concerns about the antenna and potential RF source near their dwellings. Mobilitie should have in place a procedure for taking RF power density levels in nearby dwellings when requested by the members of the general public.
5. In accordance with the San Francisco Public Works Code, Art. 39, Sec. 1027 (a)(10) Mobilitie is responsible for paying a fee of $210.00 to the San Francisco Department of Public Health for this review.

Please note that the approval and any conditions apply only to the equipment and installation as described. If any changes in the equipment or any increase in the effective radiated power described above are made, a new review by the Department of Public Health must be conducted.

San Francisco Planning Department Conditions:

1. Paint and maintain on appropriate street lines.
2. No exposed metal, mortar pan or metal pedestal may be used.
3. Antenna and all equipment (external conduit, radio relay units, dimmers used to shroud to jacket bolts (if needed), and mounting mechanisms) except signage, if used for screening, shall all be painted to match the pole and repainted as needed.
4. Cabling below radio relay units shall enter the pole with no more than a five inch gap between bottom of each radio relay unit and the bottom of the corresponding entry hole on the pole. Conduit connection at pole entry points shall utilize the smallest fitting sizes available. Sealing compounds, if utilized, shall be fully utilized excess building and painted to match pole.
5. Remove raised equipment signage (including fitting in manufacturer logo, nameplates on radio relay units/cabinets) and equipment decals that may be visible from sidewalk and dwellings, unless required by government regulation.
6. Utilize smallest RF warning signage allowed (a 4 inches), and place the warning sticker facing out towards street, at a location as close to antenna as is feasible. Sticker shall face away from street, when not facing

a nearby window within 10 feet. Background color of marker shall match the pole mounting surface, and logo and text shall be white.

7. Batt equipment enclosures (not including antennas) as close as allowed by applicable regulation and manufacturer equipment standards.
8. Seams and bolts/screws at antenna and shroud assembly area shall be hardened and installed in a manner so as to reduce their visibility (e.g. flush mounting screws) from sidewalk level.
9. Non-photo only visible flashing indicator lights on shroud.
10. Pole shroud: the view from, on the right side and adjacent residential windows.
11. New below ground enclosure excavation (vault) if utilized, shall not damage or remove granite curbs. No significant gaps shall be created between vault enclosure lid and primary sidewalk material due to installation. Any other existing historic architectural elements within the public right of way shall be retained and protected during installation. No carrier logo or carrier name may be placed on the vault lid.
12. Non-essential radio relay unit elements (handle and logo) shall be removed.
13. The installer shall arrange to have Planning Department staff review the initial installation, in order to ensure compliance with the aforementioned conditions (notwithstanding inspections by pole owner and Department of Public Works).
14. Ensure Wi-Fi Access Points and associated wiring, utilized by the City's Department of Technology, are not damaged during installation (if present).
15. Should the installation vary from said conditions, the application shall be resubmitted to the Planning Department for further review and comment.

Exhibit 10

From: CPC.Wireless <CPC.Wireless@sfgov.org>
Date: July 2, 2018 at 2:41:41 PM PDT
To: "maggiegsedar@comcast.net" <maggiegsedar@comcast.net>
Subject: Planning Response to Protest of DPW Permit Application No. 18WR-0033

Good Afternoon Mr. Sedar and Ms. Sedar,

Planning has reviewed the comments submitted in opposition to the proposed small cell site on a replacement concrete pole located adjacent to 1509 Shrader Street. In light of the protests, Planning has re-reviewed the application materials for Application 18WR-0033.

Pursuant to Article 25. Section 7. Part D. of Public Works (DPW), the Planning Department shall only consider views of buildings, open spaces, natural vistas, or parks from the Public Rights-of-Ways. The Planning Department shall not take into account views from private properties. Per Section 2. Part B, Definition 39, Planning may only determine if a proposed facility will significantly obstruct views from and/or light into surrounding residential windows.

The existing pole and proposed attached wireless facility would be located approximately 14 feet and 10 inches away from the adjacent building. The proposed mounting of side-mounted, low-profile equipment enclosures would not be within 6' away from a window, and the proposed pole top antenna would not be within 8' away from a residenitial window, as recommended in Article 25.

Due to the streamlined design of the wireless attachments, the proposed wireless facility would not substantially obstruct views from a window, or block light into a residential window. For this reason, the Planning Department determined that the proposed wireless facility would satisfy the compatibility standards for a Tier B Personal Wireless Service Facility Site Permit.

Thank you,

CPC Wireless Team

Current Planning

Planning Department, City and County of San Francisco
1650 Mission Street, Suite 400, San Francisco, CA 94103
Email: CPC.wireless@sfgov.org

Exhibit 11

City and County of San Francisco
DEPARTMENT OF PUBLIC HEALTH
ENVIRONMENTAL HEALTH SECTION

Mark Farrell, Mayor
Barbara A. Garcia, MPA, Director of Health
Stephanie Cushing, MSPH, CHMM, REHS, Director of EH

April 24, 2018

TO: Gene Chan, Dept. of Public Works, Bureau of Street Use and Mapping

FROM: Arthur Duque, Dept. Of Public Health, Environmental Health Services AD

RE: Mobilitie Pole Mounted Antennas, Alpha Wireless Model AW3477-S1-G & Airspan Model iRelay 460

Location:	DPW Application:	Node#
1509 Shrader St.	18WR-0033	9CAB007733 / SF90xs701B

As requested, I have reviewed the documentation that you and Mobilitie have provided to me regarding the proposed installation of an Alpha Wireless Model AW3477-S1-G & Airspan Model iRelay 460 Antenna, on a utility pole or similar structures located at the above listed location in the City and County of San Francisco.

This review includes February 16, 2018 radio frequency energy report prepared by Hammett and Edison Inc. for this site. The report states that one Alpha Wireless Model AW3477-S1-G omnidirectional cylindrical antenna & Fastback Networks Model IBR 1300 Microwave antenna will be mounted on a utility pole near the location listed above. The Alpha Wireless antenna will be at least 31 feet above the ground level. The Fastback Networks Microwave antenna will be 19 feet above the ground pointing in the 37°T which is northeast on Shrader St. Due to the mounting location, the antenna would not be accessible to the general public.

The maximum effective radiated power from this antenna is estimated to be 154 watts.

The maximum calculated exposure level at the ground level will not exceed 0.012 mW/cm2, which is 1.2% of the FCC public exposure standard. The three dimensional perimeter of the radio frequency (RF) levels equal to the public exposure limit is calculated to extend a maximum of 2.50 feet from the face of the antenna and does not reach any publicly accessible areas. The maximum calculated exposure level at any nearby building is 6.9% of the FCC public exposure limit for the adjacent building 15 feet away.

Based on the information provided in the Hammett and Edison report, I would agree that this Mobilitie Alpha Wireless and Airspan Model iRelay 460 antenna, utility pole installation would be in compliance with the FCC standards and would not produce radio frequency energy exceeding the FCC public exposure limits.

In addition, a noise evaluation was done on the combination of equipment assumed to be installed at this location which was prepared by Hammett & Edison and was dated November 3, 2017. This evaluation found that the equipment will produce noise no louder than 45 decibels 8 feet away from the nearest building façade. As such, the installation of the equipment would be in compliance with the noise standards as outlined in the DPW Code, Article 25.

Approval Conditions:

- Ensure that any equipment associated with the pole installation of this antenna does not produce a noise in excess of 45 dBA as measured at three (3) feet from the nearest residential building façade.
- Ensure that there are no publicly occupied areas within two and a half (2.50) feet from the face of the antenna.
- Once the antenna is installed, Mobilitie must take RF power density measurements with the antenna operating at full power to verify the level reported in the Hammett and Edison report and to ensure that the FCC public exposure level is not exceeded in any publicly accessible area. This measurement must be taken again at the time of the permit renewal.
- Mobilitie should be aware that the general public may have concerns about the antenna and potential RF source near their dwellings. Mobilitie should have in place a procedure for taking RF power density levels in nearby dwellings when requested by the members of the general public.
- In accordance with the San Francisco Public Works Code, Art. 25, Sec. 1527 (a)(2)(C) AT&T is responsible for paying a fee of $210.00 to the San Francisco Department of Public Health for this review.

Please note that this approval and any conditions apply only to the equipment and installation as described. If any changes in the equipment or any increase in the effective radiated power described above are made, a new review by the Department of Public Health must be conducted.

Exhibit 12

From: Bern Shen <bernshen@gmail.com>
Sent: Tuesday, July 3, 2018 11:03 PM
To: DPW-Wireless-Program@sfdpw.org
Subject: Re: Wireless Facility Program – Permit Application No. 18WR-0033

Dear SFDPW,

As SF homeowners & healthcare/technology professionals, my wife Ann & I wanted to communicate our strong concerns about the proposed installation of 5G cell equipment on the utility pole in front of our home at 1515 Shrader St.

While we're certainly intrigued by the super-fast connectivity promised by 5G, we have several concerns:

- We strongly believe it makes sense to wait for more definitive, well-done research (or a balanced & well-documented summary such as this one on health risks of power lines) before installing ubiquitous broadcast radiation sources within 15-20 feet of where we live & sleep.
- Unknown & potentially very high impact environmental health risks should trigger the Precautionary Principle that commonly underpins policy in Europe, with its four main components:
    - Taking preventive action in the face of uncertainty
    - Shifting the burden of proof to the proponents of an activity
    - Exploring a wide range of alternatives to possibly harmful actions
    - Increasing public participation in decision making
- Strong business pressures (an estimated $250B in annual 5G revenues for telcos by 2025 & payments to cities of several thousand dollars per pole) increase the risk of public health being ignored in favor of near-term profits.
- We have material concerns about risk to our property from poorly maintained electrical equipment, given the very recent multibillion dollar judgment against PG&E for the Santa Rosa fires.
- We're also concerned about decreases (perhaps up to 10%) in our home's property value from increased visual clutter & potential concerns of future buyers, similar to admittedly imprecise but nonetheless real perceptions around power lines - one of the reasons we move into our neighborhood was the pleasant street view created by having utility cables buried underground. We hope you can empathize with our objections to having unsightly equipment mounted so close to our living room & bedroom windows.

As mentioned on your public works hearing website, please bring our note to the attention of the Hearing Officer & include it in the official public record of the hearing.

With thanks & respect,

-Bern Shen MD & Ann Williamson RN, PhD

Exhibits 13 & 14

Exh 13 – Mobilitie image at <u>much higher resolution</u> (only achievable through Records Request)

- Large Equip Box, nearly 3' tall (over half the size of these large Bay windows), is now clearly visible
- Even using Mobilitie's deceptive angle/image, the Equipment Box's **SIGNIFICANT OBSTRUCTION of LIGHT and VIEW** is undisputable

Exh 14 – Mobilitie image at <u>much higher resolution</u> (only achievable through Records Request)

- Large Equip Box, nearly 3' tall (over half the size of these large Bay windows), is now clearly visible
- Even using Mobilitie's deceptive angle/image, the Equipment Box's **SIGNIFICANT OBSTRUCTION of VIEWS** is undisputable

Exhibit 15

112 Residents have Signed Petition Requesting Permit #18WR-0033 be Denied

62 – Shrader Street
33 – Bounding Streets
11 – Other Cole Valley
6 – Castro, other

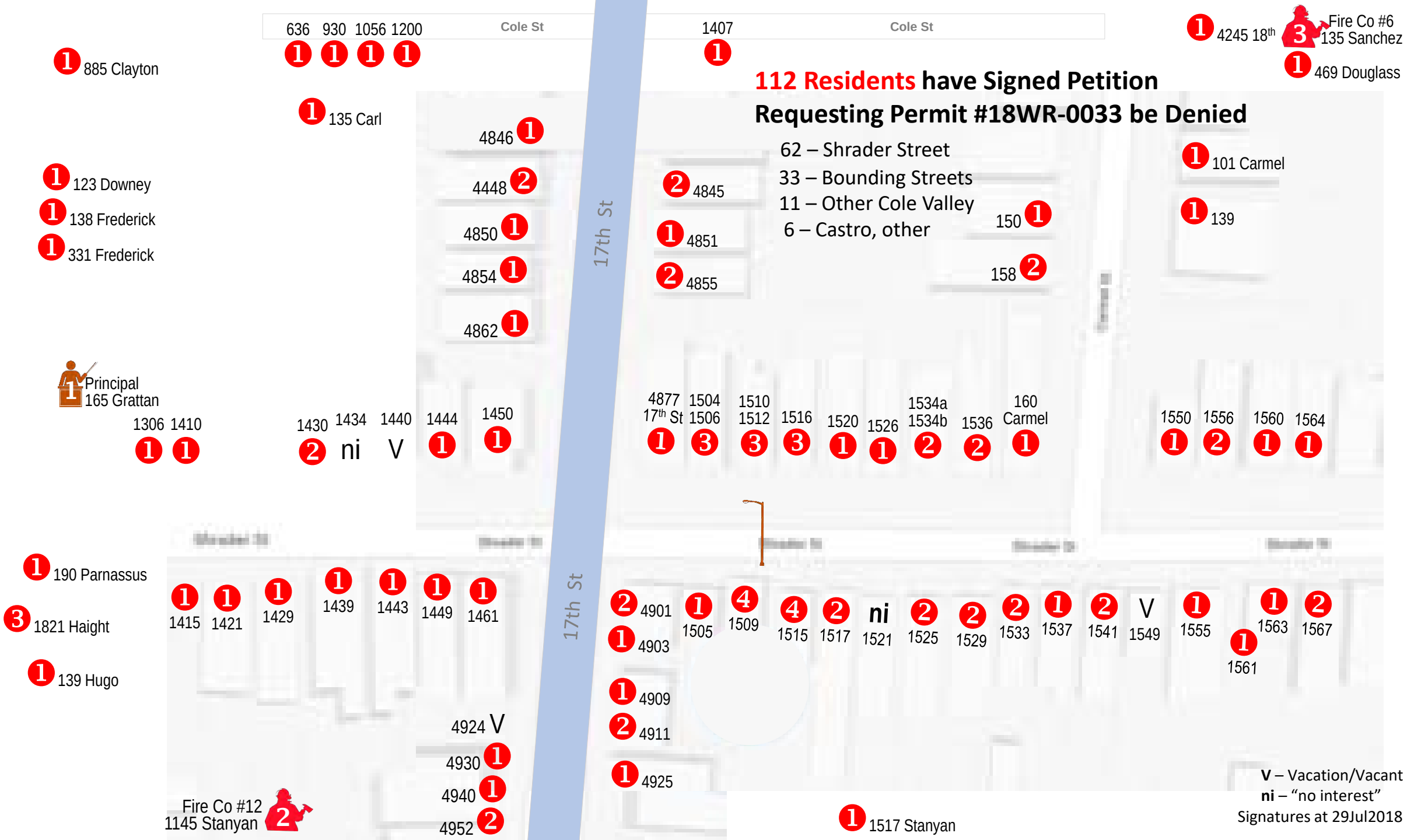

V – Vacation/Vacant
ni – "no interest"
Signatures at 29Jul2018

We respectfully **request the City of San Francisco reject Mobilitie LLC's Permit Application No. 18WR-0033 to install a Personal Wireless Service Facility in front of 1509 Shrader Street.** Please see individual signatures and addresses below for presentation at any related Public Hearing on this Permit Application. We are committed to keep our San Francisco neighborhood safe and beautiful.

PRINTED NAME	SAN FRANCISCO ADDRESS	SIGNATURE
BRIAN SEDAR	1509 SHRADER ST, 94117	Brian Sedar
Maggie Sedar	1509 Shrader St 94117	Maggie G Sedar
WILLIAM SHEPPARD (Leenie Rae)	1505 SHRADER	William L. Sheppard
Arlene S. Cook	930 Cole St., 101	Arlene S. Cook
Elizabeth McDonald	1516 Shrader St. San Francisco 94117	Elizabeth McDonald
Linda Swanson	1517 Stanyan St.	Linda Swanson
Justin Mcintel	1536 Shrader St.	Justin Mcintel
Jeff Solomon	1537 Shrader Street	
Luis Rodriguez	1056 Cole St	
Frankie Sedar	1504 Shrader St	Frankie Sedar
Sara Ferrigno	1529 Shrader St	
Amy Menzel	1536 Shrader St	Amy Menzel
Emily Weisler	1510 Shrader St	Emily Weisler
Chris Weisler	1510 Shrader St	
Lori Coleman	1525 Shrader	

We respectfully **request the City of San Francisco reject Mobilitie LLC's Permit Application No. 18WR-0033 to install a Personal Wireless Service Facility in front of 1509 Shrader Street.** Please see individual signatures and addresses below for presentation at any related Public Hearing on this Permit Application. We are committed to keep our San Francisco neighborhood safe and beautiful.

PRINTED NAME	SAN FRANCISCO ADDRESS	SIGNATURE
Sidney Fazekas	3322 Clay street	
NATHALIE PAVEN	1534 B SHRADER	
Jean L GALLO	1534A Shrader St.	
ATHENA PAPPAS	139 Hugo ST	
MATT FLADELAND	1504 SHRADER ST.	
Craig Jeffrey	636 Cole St	
MICHAEL CRUZ	4846 17TH ST	
Katherine Tillotson	1407 Cole St.	
Colin O'Malley	1556 Shrader St	
Luke Karasik	1556 Shrader St	
MICHAEL JOHNSON	1560 SHRADER ST	
Brenda Duyan	1564 Shrader St.	
Robert Goldberg	1541 Shrader St	
Ann Baldberg	1541 Shrader St.	
GINA CENTONI	1550 SHRADER ST	

We respectfully **request the City of San Francisco reject Mobilitie LLC's Permit Application No. 18WR-0033 to install a Personal Wireless Service Facility in front of 1509 Shrader Street**. Please see individual signatures and addresses below for presentation at any related Public Hearing on this Permit Application. We are committed to keep our San Francisco neighborhood safe and beautiful.

PRINTED NAME	SAN FRANCISCO ADDRESS	SIGNATURE
Jesse Hermann	1506 Shrader St	
PETER SCOTT DUYAN	1546 SHRADER ST.	Peter Scott Duyan
Ray Mullin	4855 17th St.	
MELISSA MULLIN	4855 17th St	Melissa Mullin
Randall W Swanson	1517 Shrader St.	R.W. Swanson
John M. MacGregor	4845 17th St.	
KERRY KO	4845 17th St	
Pete Kang	1200 Cole St	
Sheila Mullen	135 Carl St #2	Sheila M. Mullen
Catherine Marie Walter	PRINCIPAL GRATTAN ELEMENTARY SCHOOL 165 Grattan St	
RALPH EDLER	1444 Shrader	
Brittney Schaeffer	101 Carmel St.	
LESLIE TERZIAN	469 DOUGLASS	
Courtney Rhoden	190 Parnassus	
KEVIN SHEN	1515 SHRADER ST	Kevin Shen

We respectfully **request the City of San Francisco reject Mobilitie LLC's Permit Application No. 18WR-0033 to install a Personal Wireless Service Facility in front of 1509 Shrader Street.** Please see individual signatures and addresses below for presentation at any related Public Hearing on this Permit Application. We are committed to keep our San Francisco neighborhood safe and beautiful.

PRINTED NAME	SAN FRANCISCO ADDRESS	SIGNATURE
BERN SHEN, MD	1515 SHRADER ST.	B. Shen
ANN WILLIAMSON, RN, PhD	1515 SHRADER ST.	Ann Williamson

We respectfully **request the City of San Francisco reject Mobilitie LLC's Permit Application No. 18WR-0033 to install a Personal Wireless Service Facility in front of 1509 Shrader Street.** Please see individual signatures and addresses below for presentation at any related Public Hearing on this Permit Application. We are committed to keep our San Francisco neighborhood safe and beautiful.

PRINTED NAME	SAN FRANCISCO ADDRESS	SIGNATURE
ALTHEA JAMES	1516 SHADER ST	altheajames
Eleanor James	1516 Shrader st	[illegible]
Sarah Rippy	1520 Shrader	[illegible]
Vanessa Shen	1515 Shrader St	[illegible]
Nan Webb	4940 17th St	[illegible]
Tate Seder	1509 Shrader ST	[illegible]

We respectfully **request the City of San Francisco reject Mobilitie LLC's Permit Application No. 18WR-0033 to install a Personal Wireless Service Facility in front of 1509 Shrader Street.** Please see individual signatures and addresses below for presentation at any related Public Hearing on this Permit Application. We are committed to keep our San Francisco neighborhood safe and beautiful.

PRINTED NAME	SAN FRANCISCO ADDRESS	SIGNATURE
MICHAEL PETERSON	1512 SHRADER ST, 94117	
Andong Zhang	1506 SHRADER St 94117	An-dong Zhang
YINLAN ZHANG	1504 SHRADER ST, 94117	
André Ferrigno	1529 Shrader St. 94117	

We respectfully **request the City of San Francisco reject Mobilitie LLC's Permit Application No. 18WR-0033 to install a Personal Wireless Service Facility in front of 1509 Shrader Street.** Please see individual signatures and addresses below for presentation at any related Public Hearing on this Permit Application. We are committed to keep our San Francisco neighborhood safe and beautiful.

PRINTED NAME	SAN FRANCISCO ADDRESS	SIGNATURE
KHALED	1821 Haight	K
ATIF NAZIR	1821 HAIGHT	
Deia	1821 Haight	

We respectfully request the City of San Francisco reject Verizon's (VZ) Permit Application No. **[illegible]** to install a Personal Wireless Service Facility in front of **1525 Shrader Street**. Please use individual signatures and addresses below for presentation at any related Public Hearing on this Permit Application. We are committed to keep our San Francisco neighborhood safe and beautiful.

PRINTED NAME	SAN FRANCISCO ADDRESS	SIGNATURE
[illegible]	[illegible]	[illegible]
Jane Tatum	1533 Shrader	[illegible]
Brandon Bolen	1533 Shrader Unit	[illegible]
Elizabeth Jones	1561 Shrader St	[illegible]
[illegible]	[illegible]	[illegible]
Laura Sanders	1567 Shrader St	[illegible]
[illegible]	1567 Shrader St	[illegible]
Ryan Lorenzen	1533 Shrader St	[illegible]
Rodney Lanetti	4450 17th	[illegible]
Jed Kirch	1710 Sanchez	[illegible]
Jessica Lange	4952 17th	[illegible]
Sheila Lanin	4952 17th St	[illegible]
* Kathleen Lou	1561 Masonic St	[illegible]
* [illegible]	[illegible]	[illegible]
* Don Mathis	125 Sanchez St	[illegible]

(8a) Signatures submitted at Land Use Hearing

(8b)

* or Homeowner on file

(8)

We respectfully request the City of San Francisco reject Mobilitie LLC's Permit Application No. 13WR-0033 to install a Personal Wireless Service Facility in front of 1325 Shrader Street. Please see individual signatures and addresses below for presentation at any related Public Hearing on this Permit Application. We are committed to keep our San Francisco neighborhood safe and beautiful.

PRINTED NAME	SAN FRANCISCO ADDRESS	SIGNATURE
Deborah A Donohy	1338 Frederick St #9	[illegible]
Zoe Cindy	4454 17th St	[illegible]
Eliza Tompkins	1441 Cole St 94117	[illegible]
Chris Corso	955 Clayton 94117	[illegible]
Pamela Hoffman	165 Downey St	[illegible]
Denise Phair	1436 17th St	[illegible]
RANK O'NEILL	416 17th St	[illegible]
Brand Cabin	1551 17th St.	[illegible]
Laurence Robinson	1499 Shrader St	[illegible]
Eric Fonseca	1421 Shrader St	[illegible]
Kristin Vickery	150 Carmel	[illegible]
[illegible] Robinson & [illegible]	1449 Shrader	[illegible]
	→ Lucas Andrews from Rep. Carolyn [illegible] Office — Rep. Carolyn [illegible]	
** [illegible]	1421 Shrader St	[illegible]
[illegible]	1441 Shrader St	[illegible]

** [illegible]

We respectfully request the City of San Francisco reject Mobilitie LLC's Permit Application No. 15WR-0213 to install a Personal Wireless Service Facility in front of 1320 Shrader Street. Please see individual signatures and addresses below for presentation at any related Public Hearing on this Permit Application. We are committed to keep our San Francisco neighborhood safe and beautiful.

PRINTED NAME	SAN FRANCISCO ADDRESS	SIGNATURE
Monica Pinsley	1930 Shrader	M Pinsley
Jo Ann	140 Shrader	[illegible]
Paul Hallinan	1499 Shrader St	[illegible]
Diane Leonodakis	4948 17th St	Diane Leonodakis
Stephen Leonodakis	4948 17th St	[illegible]
Amy Elliott	4925 17th St.	[illegible]
Pearle Wong	1555 Shrader	[illegible]
Brian Wong	155 Carmel St	[illegible]
Megan Larsen	159 Carmel St	[illegible]
Michael Gaetano	4597 19th Street	[illegible]
Katherine Pilcher	1930 Shrader St	[illegible]
[illegible]	1930 Shrader St	[illegible]
Tom Hurley	1461 Shrader St	[illegible]
Susan Morelli	159 Carmel St	[illegible]

We respectfully request the City of San Francisco reject Mobilitie LLC's Permit Application No. 19WR-0033 to install a Personal Wireless Service Facility in front of 1509 Shrader Street. Please see individual signatures and addresses below for presentation at any related Public Hearing on this Permit Application. We are committed to keep our San Francisco neighborhood safe and beautiful.

PRINTED NAME	SAN FRANCISCO ADDRESS	SIGNATURE
Lucie Lais	4909 17th St.	
Jill Regan	4911 17th St.	
MARGARET TOSAI	4911 17 STREET	
[illegible]	[illegible]	
[illegible]	1524 Shrader St	
[illegible]	[illegible]	
Brigitte Dreyer	4911 17th St	
Hanning Kignski	[illegible]	
Jan Zelly	4903 17th	

11a

11b

11c

Open Letter from July 15, 2018
Neighbors of Upper Cole Valley
San Francisco, CA 94117

San Francisco Public Works
Bureau of Street-Use and Mapping
1155 Market St
San Francisco, CA 94103

Wireless Facility Program - Permit Application No. 18WR-0033, Public Works Order No. 187977 – Neighborhood Petition Now Totals 106 Signatures

Dear Hearing Officer for the City of San Francisco,

The Petition respectfully requesting the City of San Francisco reject Mobilitie LLC's Permit Application to install a Personal Wireless Service Facility (PWSF) in front of 1509 Shrader Street, now includes the signatures of 106 neighbors (attached).

The Signature Map included demonstrates virtually complete alignment of the neighborhood surrounding the proposed PWSF location, opposing the Permit. Signatories are all adult SF residents, five SF Firefighters from Fire Companies 12 & 6 who protect them, and the Principal of Grattan Elementary. In summary:

57 on Shrader Street
32 on bounding Streets (17th, Cole, Stanyan and Carmel)
11 other Cole Valley
6 from Castro, other

Provided a limited Hearing comment period of just 4-working days during Fourth of July Holiday week, many residents were inaccessible for their input on this important issue. Only 72 residents were available to sign the Petition submitted at 9 July. This past week, an additional 34 neighbors, or 106 total, have now signed the Petition (100 in Cole Valley was the target).

We respectfully ask that you please consider this updated signature map and all 106 neighbors' opposition, in your and the City of San Francisco's assessment of this permit.

Thank you

Refr: July 2-6, 2018 Open Letter + 60 Signatures (submitted in advance of Hearing)
July 9, 2018 Initial Signature Map + 12 Signatures (original submitted at Hearing)
Attached: Updated Signature Map, + 34 Signatures, copy of all 106 Signatures

An Open Letter from
Neighbors of Upper Cole Valley
and Concerned San Franciscans

July 2-6, 2018

San Francisco Public Works
Bureau of Street-Use and Mapping
1155 Market St
San Francisco, CA 94103

Protest of Mobilitie LLC's Wireless Permit Application No. 18WR-0033 at 1509 Shrader St

Dear Hearing Officer for the City of San Francisco,

We are concerned with the possibility of a Wireless Service Facility antenna and equipment enclosure box being placed onto the street light pole immediately next to the home at 1509 Shrader, in direct line of light and view of the residential windows of our San Francisco neighborhood street.

We are writing to formally protest the grant or any approval of Mobilitie LLC's Application for a Personal Wireless Service Facility Site Permit directly in front of 1509 Shrader Street, San Francisco, California 94117 (Application No. 18WR-0033).

Our protest/attached signature is on the grounds one or more of the following public assurances have <u>not</u> been met in this Permit Application (reference photograph Figures 1-5 attached):

1. "*Personal Wireless Service Facility* (shall) *not obstruct the view from or the light into any adjacent residential window.*"
2. *"The facilities would not…impair access to sunlight or detract from scenic vistas".* We believe the views in this Upper Cole Valley neighborhood may qualify "in the General Plan…designated as having views that are rated 'excellent' or 'good'.
3. *"The design of these facilities would not detract from streetscapes…or other areas that define individual neighborhoods".* Upper Cole Valley neighborhood utility lines were buried at ratepayer expense in the mid-1990s, removing all but safety-related streetlight poles. This "clean of utilities" street look defines this street and the addition of an unsightly large antenna and cumbersome electrical equipment enclosure directly in front of residential windows would "detract from the streetscape" and harm this coveted aspect "that defines (this) individual neighborhood".
4. *"Generally, any person within their home (even if on an upper story dwelling unit at the same level as the antenna)…would be subject to higher RF exposure levels from a cell phone in their hand than the RF exposure typically seen from these antennas."* With a young resident only 16 feet distance from a 174-Watt powered RF antenna, we question this assurance statement.
5. Or, as taxpayers, we object to the City of San Francisco renting this particular residential streetlight pole to private telecommunication firm Mobilitie, LLC to generate City revenue of $4000 per month.

Fig 1 - Streetlight Pole at 1509 Shrader
Proposed Antenna & Equip Box
Obstructs View and light

Fig 2 – LightPole at 1509 Shrader – Proposed Antenna & Deep Equip Box Obstructs View & Light

Fig 3 – Very Close Proximity of Streetlight Pole to 1509 Shrader

Fig 4 - Close Proximity, Obstructed View, Obstructed Light

Exhibit 16

Brian & Maggie Sedar
1509 Shrader St
San Francisco, CA 94117
daytime tel: (415) 533-2012
email: maggiegsedar@comcast.net

14 Jun 2018

San Francisco Public Works
Bureau of Street-Use and Mapping
1155 Market St
San Francisco, CA 94103

Attn: Wireless Permit Protests – Application No. 18WR-0033

Dear City of San Francisco,

We are extremely concerned with the possibility of a Wireless Service Facility antenna and equipment enclosure box being placed atop the street light pole quite close to and in direct line of view of the windows at our home at 1509 Shrader Street (photos attached, Fig 1-3).

When the streetlight fixtures were recently changed to LED (without consultation to affected residents) with *significantly* increased brightness, this particular installation blared straight into our young daughter's bedroom window. We had to custom order black-out shades (Fig 5), which still don't fully block the intense light because this particular streetlight is so close and directly in front of the window she must sleep next to.

We cannot allow/accept the newly proposed antenna and equipment box which would be bolted and strapped on directly in front of that same bedroom window, obstructing views, light and potentially affecting her physical safely. It's simply too much invasion of this one street pole into and on our home.

We are writing to formally protest both the grant or any approval of Mobilitie's Application for a Personal Wireless Service Facility Site Permit directly in front of our family home at 1509 Shrader Street, San Francisco, California 94117.

Our protest is based on the following grounds

1. The Planning Department may have incorrectly determined that the Application meets the applicable Compatibility Standard (Public Works Code §1509), in particular, that the "*Personal Wireless Service Facility not obstruct the view from or the light into any adjacent residential window.*"
2. The proposed location for the Personal Wireless Service Facility is in a residential neighborhood zoning district and the antenna and particularly the equipment enclosure housing would clearly obstruct the view from and into the immediately adjacent residential windows (Public Works Code §1509(b)(2)). We have included Figs 1-3 and 6-10 showing the obstruction of the view from our immediately adjacent daughter's bay window, the adjoining study bay window, and below these two rooms, our front door window and the adjoining living room bay window.
3. The proposed location for the Personal Wireless Service Facility is in a residential neighborhood zoning district and the antenna and particularly the equipment enclosure housing would clearly

block light coming into the immediately adjacent residential windows (Public Works Code §1509(b)(2)). We have included Figs 1-3 and 6-10 showing the obstruction of light coming into our immediately adjacent young daughter's bay window, the adjoining study bay window, and below these two rooms, our front door window and the adjoining living room bay window.

4. The proposed location for the Personal Wireless Service Facility may not conform with the City's General Plan or Master Plan (Planning Code §101.1). Referring to *SF Planning Department FAQs for Small Cells (wireless) on Steel Light and Transit Poles*:

    a) Pg10 *"The design of these facilities would not detract from streetscapes, historic districts or other areas that define individual neighborhoods".*

    When we purchased our home in 1998, we specifically chose our upper Cole Valley neighborhood because all utility lines had recently been buried there, removing all but minimal, street lighting/safety-related visible utilities. This "clean of utilities" street look defined and continues to define our neighborhood. The proposed addition of an unsightly large antenna and especially the large, cumbersome electrical equipment enclosure directly in front of our residential windows would "detract from the streetscape" and harm this coveted aspect "that defines (this) individual neighborhood".

    b) Pg11 *"The facilities would not…impair access to sunlight or detract from scenic vistas".*

    As stated above in items 2. and 3. related to Compatibility Standard, we believe this proposed installation would also not conform with the City's General Plan or Master Plan in this respect as it would impair access to sunlight and detract from scenic views we sought in and cherish from our home.

    We believe the views in our Upper Cole Valley neighborhood may qualify "in the General Plan…designated as having views that are rated 'excellent' or 'good'."

5. The Department of Public Health may have incorrectly determined that the Application complies with the Public Health Compliance Standard (Public Works Code §1507). Referring to *SF Planning Department FAQs for Small Cells (wireless) on Steel Light and Transit Poles*:

    a) Pg11 *"Even at…174 watts, the general public should remain…8 feet…away from the face of the antenna at the top of the pole".*

    We believe our daughter will frequently be within or sleeping within 16 feet of the proposed antenna. We believe the placement of this particular cell antenna would be less than a *single* "factor of safety", providing little or no protection per even this aggressive industry safety and health warning (see Fig 4).

    b) Pg12 *"Generally, any person within their home (even if on an upper story dwelling unit at the same level as the antenna)…would be subject to higher RF exposure levels from a cell phone in their hand than the RF exposure typically seen from these (small cell) antennas."*

    At only 16 feet distance from a 174-Watt powered RF antenna, we do not believe this assurance statement to be even remotely correct. A close friend in the Telecommunications industry (please note Brian was the General Manager for Bechtel Telecommunications and still has very current contacts in that industry) advises he would NOT allow his daughter to be this close to even a Small Cell site antenna.

6. We believe this cell site configuration depicted in the photographs the City provided most closely matches Verizon's standard. No one in our home uses Verizon so this installation would not benefit us in any way; rather the opposite -- something ugly in front of our home.
7. The Application may not comply with other requirements for obtaining a Personal Wireless Service Facility Site Permit. While the letter is dated Friday "5/25/2018" it arrived at our home via US Mail on Friday 1Jun2018 and there was no postmark date on the letter. Accordingly, we are well within the 20-day requirement (business or calendar days) to respond, but we are not certain the notice has been provided in a timely or perhaps proper fashion. Further, we received no prior notice that the City was considering its Tentative Approval for these types of private sector permits or this particular permit.
8. The Applicant may intend to modify the Personal Wireless Service Facility after the Permit is issued in a manner that would not comply with the applicable Compatibility Standard. We state this because we believe the permit application is already non-compliant with the Standard.

We belong to the Cole Valley neighborhood association and there has been quite an online discussion on the association's FB site against the placement of the cell site in this particular location, with concerns about destroyed views, electromagnetic radiation as well as City sale of the streetlight sites to this and then later telecommunication companies. Our equally concerned neighbors want to write individual letters, and if the City needs signatures on one letter we are committed to do that in advance of any public hearing. We used this process before and successfully petitioned for the stop sign on 17th and Shrader Street. We are willing to do what it takes to keep our neighborhood safe and beautiful.

We don't believe our mid-block, next-to-window lamp post on a view street with buried utilities should have been selected. If the City believes small cell sites are needed and must be sold/approved in the immediate area, we point out Mobilitie may not be following the "Applicable Compatibility Standard" by showing the very-next-pole-away location: the corner of 17th Street at Shrader on the north side of 17th. This corner-mounted light pole is further away from ALL surrounding homes, including the closest two story house, than the proposed location. The adjacent house has NO windows as close to the pole, NO windows as high as the equipment box level, and utility pole-sourced wiring on 17th Street -- all much more in line with what the Compatibility Standard suggests. An equipment enclosure at the height of that roof would not appear to obstruct any view for that or adjacent properties. See Figs 11-12.

We appreciate the City of San Francisco reconsidering its Tentative Approval of Application for a Personal Wireless Service Facility Site Permit directly in front of our home at 1509 Shrader Street. We hope to hear soon of its rejection or an alternative location(s).

Respectfully submitted,

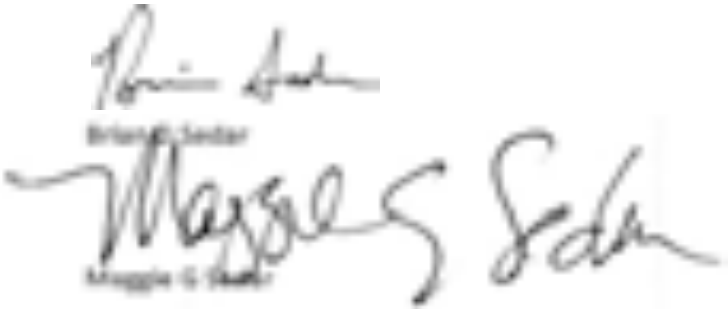

Attachment (Figs 1-12)

Fig 1 – Very Close Streetlight Pole to our Home - Proposal Obstructs View, Obstructs Light

Fig 2 - Close Proximity, Obstructed View, Obstructed Light – Daughter's Bedroom

Fig 3 - Close Proximity, Obstructed View, Obstructed Light – Daughter's Bed

Fig 4 – Very Close Proximity of Streetlight Pole to our Home

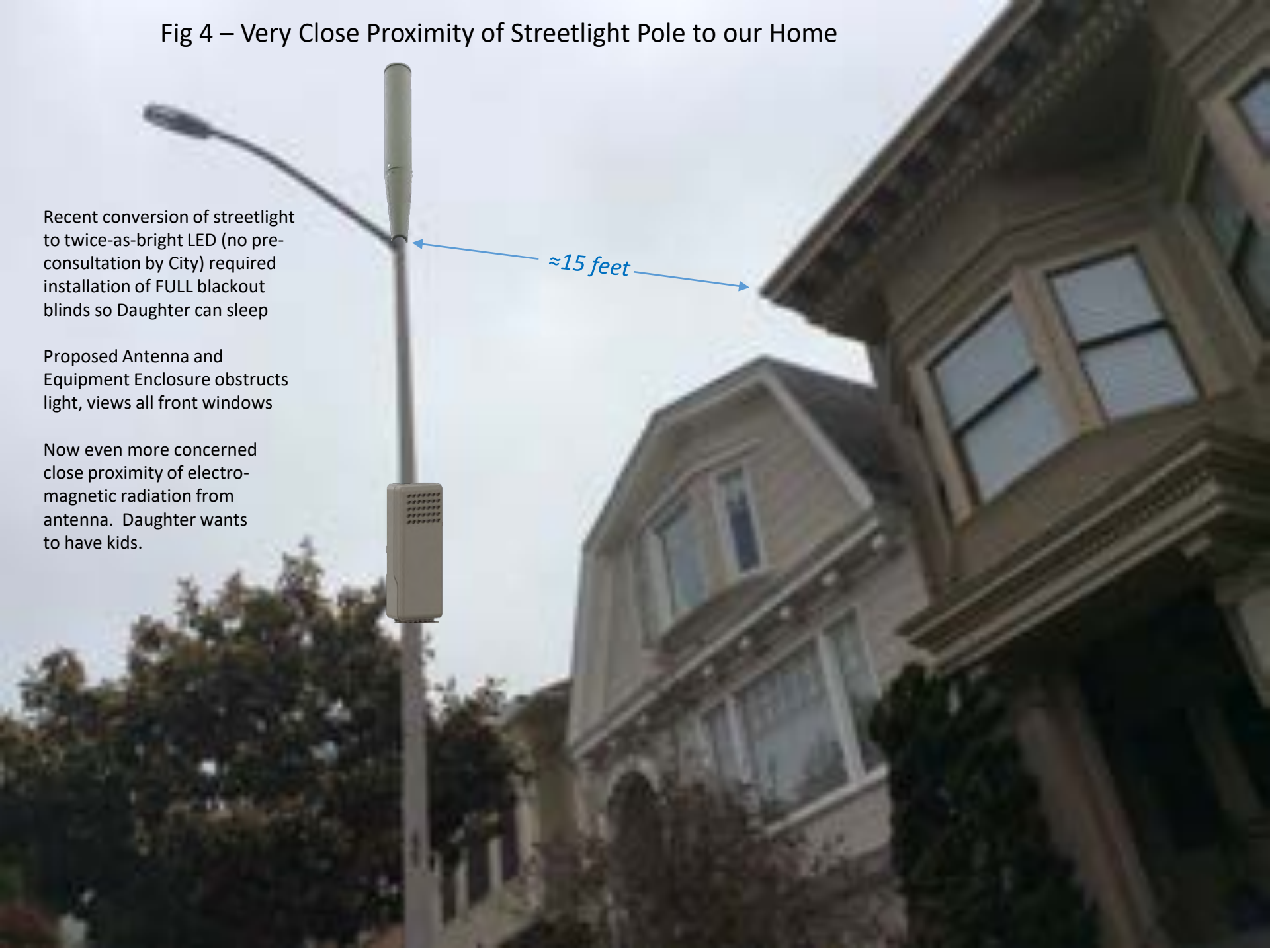

Recent conversion of streetlight to twice-as-bright LED (no pre-consultation by City) required installation of FULL blackout blinds so Daughter can sleep

Proposed Antenna and Equipment Enclosure obstructs light, views all front windows

Now even more concerned close proximity of electro-magnetic radiation from antenna. Daughter wants to have kids.

Fig 5 – Extremely Close Proximity of Streetlight to Daughter's Bed

Recent conversion of streetlight to twice-as-bright LED (no pre-consultation by City) required installation of FULL blackout blinds so Daughter can sleep

Now even more concerned about close proximity of electromagnetic radiation from antenna. Daughter wants to have kids.

Fig 6 - Close Proximity, Obstructed View, Obstructed Light – Adjacent 2nd floor Study, R Bay

Fig 7 - Close Proximity, Obstructed View, Obstructed Light – Adjacent 2nd floor Study, Main Bay

Fig 8 - Obstructed View, Obstructed Light, Close Proximity – Front Entry Window

Fig 9 - Close Proximity, Obstructed View – Adjacent 1st floor Living Room, R bay

Fig 10 - Close Proximity, Obstructed View, Obstructed Light – 1st floor Living Room, Main bay

Fig 11 – Applicable Compatibility Standard? Further from Houses, No Adjacent Windows

Fig 12 – Current Proposed Site Immediately Adjacent 3rd Story Bedroom

Exhibit 17

San Francisco Public Works
Bureau of Street use and Mapping
1155 Market Street
San Francisco, CA 94104
Attn: Wireless Permit Protests

July 8, 2018

Re: Mobilitie permit at 1509 Shrader Street

To whom it may concern,

As some of my neighbors have (or will attest), there are many reasons to question whether the addition of personal wireless facilities to our neighborhood are in the best interest of the community and the fabric of Cole Valley.

Safety

I have concerns of adding a few hundred pounds and an additional ~10% in height to this telephone pole. It would make the pole top heavy and in a city prone to earthquakes, seems like a significant risk.

Inability to guarantee compliance with FCC rule to eliminate/reduce electronic interference

While any one carrier may claim that they can meet this demand, there are up to 4 wireless carriers seeking to install these small cells to close their 'coverage gaps'. The guarantee that an individual cell will not cause interference, is not meaningful absent proof that competing small cells within the same area will not have a cumulative effect that could impede the operation of my consumer grade RF-based household equipment (such as wireless access points, garage doors etc).

Aesthetics

By SF Planning Department's own omission "the cumulative effect of multiple equipment enclosures may result in a cluttered design that would not be viable". As mentioned above, as competing carriers try to blanket the same neighborhoods with their individual cells, the block may become cluttered with these cells. If Mobilitie seeks coverage on this block now, it is only expected that the other carriers will follow suit.

Property Values

I am greatly concerned that the addition of a small cell this close to my home will decrease my property value. There is research that concludes property values decrease by as much as 20% when said property is near to a cell tower. My home is my biggest asset and will be less than

150 feet from this installation. The city should not support such a potential property value decreasing event for any of its tax paying citizens.

There is a better option

SF has always been a forward-thinking community. I urge the city to develop a well thought out plan of supporting 5G through the installation of safer underground fiber optic cabling to each home. Such wired fiberoptic connections are more reliable, faster, provide greater capacity (in an ever growing tech focused city) and provide more cyber security.

I urge a vote not to approve this Mobilitie application because this tower does not belong in the residential neighborhood of Cole Valley. It disturbs the aesthetic of the community and as an eye sore and safety hazard, will reduce property values and decrease overall appeal of the affected homes in the eyes of potential new buyers.

Luciel Leis
4909 17th Street

Exhibit 18

Hi, Good Morning, I'm Frankie Sedar

My room is right next to the light pole.

It's so close that when they put the new LED lights up last Winter, we got blackout blinds so I could sleep because I look right onto the light, above where the 5G Antenna would be attached. And when I'm at my desk, I look right smack at where that big 3 foot Equipment Box would be attached.

The stuff Mobilitie sent doesn't tell you anything. The scale drawings Dad did really got my and our neighbor's attention. I had no idea how big and how close this transmitter was until we all looked into it.

I like technology and I'm not usually afraid of it. But this does scare me. You just know cellular's more powerful than it was before I was born, and 5G will be even stronger, so I don't think the City of San Francisco should be relying on 1996 studies, and I don't believe sleeping next to that huge Antenna is going to be just like holding a phone next to your ear.

I also didn't like the way Mobility puts the radiation warning sticker up for the pole workers but then don't show it to the public or that they get to turn the thing off for even a quick visit but I'm supposed to be OK that close to it 24/7.

I've seen the KPIX videos and it's upsetting to see that noone's looking at the problem except the firefighters. I think it's great that they did studies and got the 50ft protection at their stations. But it upsets me that the City listens and looks out for them, but expects me to sleep 15 feet away from this thing.

If Dr Shen and Dr Williamson are worried about this, it worries me even more.

I think if we have 5G in SF we can find better places to put the antennas than this close to a person's window. I hope you will reject Mobilitie's request for this location.

Thank you

Exhibit 19

NOTICE OF FINAL DETERMINATION TO APPROVE A PERSONAL WIRELESS SERVICE FACILITY SITE PERMIT

Date: 9/13/2018

Application No.: **18WR-0033**
Applicant Name: **Mobilitie, LLC**
Location: **1509 Shrader Street**

San Francisco Public Works has finally approved the above-referenced Application submitted by **Mobilitie, LLC** for a Personal Wireless Service Facility Site Permit in the vicinity of **1509 Shrader Street**.

The equipment to be installed at this location include: One (1) antenna, one (1) equipment enclosure housing UE Relay and radio. A photo-simulation of the approved Personal Wireless Service Facility is attached hereto.

The Applicant does not know at this time whether it will file an Application for a permit to modify the proposed Personal Wireless Service Facility at any time during the term of the Personal Wireless Service Facility Site Permit.

Each of the following City departments made a determination that the Application satisfied the applicable requirements of the Public Works Code:

1. San Francisco Public Works/ Bureau of Street Use and Mapping has approved the permit with conditions.
2. San Francisco Department of Public Health has approved the permit with conditions.
3. San Francisco Planning Department has approved the permit with conditions.

The final approval includes the following condition(s):

San Francisco Public Works Conditions:

1. This recommendation is based on no variation from the depicted drawings and/or photo simulation; if a variation is different a re-submittal is required. Should the installation vary from said conditions, it should be resubmitted to Department(s) for further review and comment
2. New Poles: no new poles shall be erected or placed in underground districts.
3. Down Guys: Follow all excavation codes to obtain the necessary permits for placement of down guys. Down guy shall avoid crossing conflicting areas but not limited to driveways, curb ramps.
4. Comply with ADA code requirements for Federal, State, local laws. Make sure path of minimum required clear width for accessible path of travel is four feet.
5. At the conclusion of the work, provide a set of as built photos of the installation to the Bureau Street Use & Mapping Permit Office.
6. Maintain a valid certification of insurance annually and forward a copy to the Bureau Street Use & Mapping Permit Office.

San Francisco Department of Public Health Conditions:

1. Ensure that any equipment associated with the pole installation of this antenna does not produce a noise in excess of 45 dBA as measured at three (3) feet from the nearest residential building façade.
2. Ensure that there are no publicly occupied areas within two and a half (2.50) feet from the face of the antenna.
3. Once the antenna is installed, Mobilitie must take RF power density measurements with the antenna operating at full power to verify the level reported in the Hammett and Edison report and to ensure that the FCC public exposure level is not exceeded in any publicly accessible area. This measurement must be taken again at the time of the permit renewal.
4. Mobilitie should be aware that the general public may have concerns about the antenna and potential RF source near their dwellings. Mobilitie should have in place a procedure for taking RF power density levels in nearby dwellings when requested by the members of the general public.
5. In accordance with the San Francisco Public Works Code, Art. 25, Sec. 1527 (a)(2)(C) Mobilitie is responsible for paying a fee of $210.00 to the San Francisco Department of Public Health for this review.

Please note that this approval and any conditions apply only to the equipment and installation as described. If any changes in the equipment or any increase in the effective radiated power described above are made, a new review by the Department of Public Health must be conducted.

San Francisco Planning Department Conditions:

1. Plant and maintain an appropriate street tree.
2. No exposed meter, meter pan or meter pedestal may be used.
3. Antenna, and all equipment (external conduit, radio relay units, blinders used to shroud bracket bolts [if needed], and mounting mechanisms); except signage, if used for screening, shall all be painted to match the pole and repainted as needed.
4. Cabling below radio relay units shall enter the pole with no more than a five-inch gap between bottom of each radio relay unit and the bottom of the corresponding entry hole on the pole. Conduit connection at pole entry points shall utilize the smallest fitting sizes available. Sealing compounds, if utilized, shall be tidy without excess bubbling and painted to match pole.
5. Remove raised equipment signage (including filling in manufacturer logo indentations on radio relay units/cabinets) and equipment decals that may be visible from sidewalk and dwellings, unless required by government regulation.
6. Utilize smallest RF warning signage allowed (4 x 6 inches); and place the warning sticker facing out toward street, at a location as close to antenna as is feasible. Sticker shall face away from street, when not facing a nearby window within 15 feet. Background color of sticker shall match the pole-mounting surface; and logo and text shall be white.

7. Stack equipment enclosures (not including antenna) as close as allowed by applicable regulation and manufacturer equipment standards.
8. Seams and bolts/screws at antenna and shroud assembly area shall be fabricated and installed in a manner so as to reduce their visibility (e.g. flush mounting screws) from sidewalk level.
9. Not utilize any visible flashing indicator lights or similar.
10. Not obstruct the view from, or the light into any adjacent residential window.
11. New below ground enclosure excavations (vault), if utilized, shall not damage or remove granite curbs. No significant gaps shall be created between vault enclosure lid and primary sidewalk material due to installation. Any other existing historic architectural elements within the public right-of-way shall be retained and protected during installation. No carrier logo or carrier name may be placed on the vault lid.
12. Non-essential radio relay unit elements (handle and legs) shall be removed.
13. The installer shall arrange to have Planning Department staff review the initial installation, in order to ensure compliance with the aforementioned conditions (notwithstanding inspections by pole owner and Department of Public Works).
14. Ensure Wi-Fi Access Points and associated wiring, utilized by the City's Department of Technology, are not damaged during installation (if present).
15. Should the installation vary from said conditions, the application shall be resubmitted to the Planning Department for further review and comment.

Within fifteen (15) calendar days of the mailing and posting of this notice, any person may appeal the issuance of this permit to the Board of Appeals. Appeals must be filed in person by either the appellant or the appellant's agent. Generally, the Board of Appeals requires that an appointment be made to file an appeal. For further information regarding the appeal process, or to schedule an appointment, please contact the Board of Appeals in person at 1650 Mission Street, Suite 304 or call 415-575-6880.

An appeal must be based on one or more of the following grounds:

1. The Department of Public Health incorrectly determined that the Application complies with the Public Health Compliance Standard (Public Works Code § 1507(b)).
2. The Planning Department incorrectly determined that the Application meets the applicable Tier Compatibility Standard (Public Works Code § (1509(b)).
3. The Application does not comply with any other requirement for obtaining a Personal Wireless Service Facility Site Permit.
4. The Applicant intends to modify the Personal Wireless Service Facility after the permit is issued in a manner that would not comply with the applicable Compatibility Standard.

To obtain additional information concerning the Application and final approval you may contact James Singleton of Mobilitie at 650-814-0564 or JSingleton@mobilitie.com. You may also contact San Francisco Public Works at 415-554-5343.

Public Works Wireless Program

view from Shrader Street looking northwest at site

mobilitie
intelligent infrastructure

9CAB007733 / SF90XS701B
Adjacent to 1509 Shrader Street, San Francisco, CA
Photosims Produced on 2-6-2018

Existing

Proposed

view from Shrader Street looking south at site

9CAB007733 / SF90XS701B
Adjacent to 1509 Shrader Street, San Francisco, CA
Photosims Produced on 2-6-2018

AdvanceSim
Photo Simulation Solutions
Contact (925) 202-8507

mobilitie
intelligent infrastructure

关于批准个人无线服务机房许可证的最终决定通知

London N. Breed
Mayor

Mohammed Nuru
Director

Jerry Sanguinetti
Manager

Street Use and Mapping
1155 Market St., 3rd floor
San Francisco, CA 94103
tel 415-554-5810

sfpublicworks.org
facebook.com/sfpublicworks
twitter.com/sfpublicworks

日期：9/13/2018

申请编号：18WR-0033
申请人名称：Mobilitie，LLC
地点：1509 Shrader St

旧金山公共工程署最终批准了 Mobilitie, LLC. 关于在第 Shrader 大街 1509 号附近建设一个个人无线服务设施站点的申请。

将于该地点安装的设备包括：一(1)根天线（安装在电杆顶部）和一(1)个固定在电杆外侧用于遮蔽 UE 继电器和无线电装置的设备外壳。 本函随附已经批准的个人无线服务设施的一张模拟照片。

申请人此时不知道在此个人无线服务机房许可期限内是否会提出关于修改本个人无线服务设施的申请。

以下每个市政部门已作出决定，该申请符合《公共工程规章》的相关要求：

1. 旧金山公共工程署/街道使用和测绘局（San Francisco Public Works/ Bureau of Street Use and Mapping）已有条件批准该许可证。
2. 旧金山公共卫生署（San Francisco Department of Public Health）已有条件批准该许可证。
3. 旧金山规划署（San Francisco Planning Department）已有条件批准该许可证。

BRIEF(S) SUBMITTED BY DETERMINATION HOLDER(S)

Mobilitie, LLC
2955 Red Hill Avenue, Suite 200
Costa Mesa, CA 92626
USA Tel: 877.999.7070
www.mobilitie.com

November 5, 2018

VIA EMAIL AND HAND DELIVERY

President Frank Fung
Vice President Rick Swig
Commissioners Darryl Honda,
Ann Lazarus, and Rachael Tanner
San Francisco Board of Appeals
1650 Mission Street, Suite 304
San Francisco, CA 94103
boardofappeals@sfgov.org

RE: Response to Appeal No. 18-130, Neighbors of Upper Cole Valley v. SFPW-BSM for Mobilitie, LLC Personal Wireless Service Facility, Wireless Site Permit 18WR-0033 (1509 Shrader Street), Board of Appeals Hearing, November 14, 2018

Dear President Fung, Vice President Swig, and Commissioners:

This letter is submitted by Mobilitie, LLC ("Mobilitie") to the San Francisco Board of Appeals (the "Board") in opposition to appeal number 18-130 (the "Appeal") filed by the Neighbors of Upper Cole Valley (the "Appellant").

The Appeal challenges Wireless Site Permit 18WR-0033 (the "Permit"), which authorized Mobilitie, LLC to install a small, unobtrusive wireless communication facility at an existing light standard location near 1509 Shrader Street (the "Facility"). As explained below, the Facility has been carefully designed to avoid any significant adverse impacts. Multiple departments of the City have thoroughly reviewed the Facility and correctly found that it meets all standards for approval.

The Appellant challenges the Permit on a litany of issues including improper notice to residents, failure to inform residents of the scale of the planned work, noncompliance with the with the conditions of the Permit, obstruction of the view and light into adjacent residential windows, an improper Department of Public Health determination, and a variety of miscellaneous complaints. Certain claims in the Appeal, such as the generalized complaints

about radio-frequency ("RF") emissions, are beyond the scope of Article 25 of the Public Works Code and are therefore also outside of the Board's jurisdiction. All issues raised are without merit because the Facility complies with all applicable regulations and will have no significant visual or other impacts. Mobilitie respectfully requests that the Board deny the Appeal and allow Mobilitie to bring improved wireless connectivity to the neighborhood.

I. Facility Description

As a preliminary matter, it is important to understand the unobtrusive nature of the Facility. Mobilitie provides wireless infrastructure services to third-party wireless carrier customers. In this instance, the Facility is being installed to address existing and ongoing data capacity issues in Sprint Spectrum L.P.'s ("Sprint") wireless network in this neighborhood. In order for Sprint to provide reliable wireless service, Mobilitie needs to install small wireless facilities, such as this Facility near 1509 Shrader Street, around San Francisco to fill in localized gaps in capacity and/or coverage. Contrary to Appellant's claim that the "neighborhood will receive no direct value from this particular PWSF" (*see* Appeal, p. 11), Mobilitie's client Sprint identified an immediate need for improved services in this area, this is site was not selected based on speculation, and this significant wireless infrastructure investment by Mobilitie and Sprint to improve services will indeed benefit the residents, visitors, and businesses in this location or that traverse through this location.[1]

---

[1] Regardless of Appellant's opinion on Sprint's standing in the wireless telecommunications industry, the State of California has granted all telephone corporations the right to construct telephone lines, including wireless equipment, in the public right-of-way for more than 100 years. The current statutory authority, California Public Utilities Code § 7901 states, in part: "Telegraph or telephone corporations may construct lines of telegraph or telephone lines along and upon any public road or highway. . . . in such manner and at such points as not to incommode the public use of the road or highway. . . ." The plain language of this statute makes it clear that the right it confers is unconditional, so long as the facility does not "incommode" public streets. Consequently, wireless providers try to locate their facilities in the rights-of-way, like traditional wireline telephone carriers, whenever feasible. This § 7901 right also requires providers to meet other City requirements as applicable, including those of DPW, Planning, SFPUC, SFMTA, and additional regulations such as Article 25 and DPW Order No. 184504 as to not "incommode" public streets. Mobilitie and Sprint have met all such requirements and regulations.

While meeting this critical communications need, the Facility has been carefully designed to be as unobtrusive as possible and avoid any adverse impacts on the surrounding neighborhood. The approved location near 1509 Shrader Street is ideal because it allows the use of an existing steel street light pole location owned by the SFPUC, avoiding the visual impact of a new utility pole at a different location where no vertical infrastructure currently exists. *See* Photo Simulations attached as Exhibit A. As approved by the Department of Public Works ("DPW"), the Facility consists of two main components: a cylindrical antenna and appurtenant accessory equipment attached to the top of a replacement pole in a primary 64.375" H x 10.75" diameter enclosure, as well as a radio unit, UE relay antenna, and appurtenant accessory equipment inside a secondary 35" H x 15.5" W x 9" D enclosure. *See* Project Plans attached as Exhibit B.

II. The City Thoroughly Reviewed the Facility

Before DPW issued the Permit, the Facility was independently reviewed by three City departments, pursuant to Article 25 of the Public Works Code. The Department of Public Health ("DPH") confirmed that this "installation would be in compliance with the FCC standards and would not produce radio frequency energy exceeding the FCC public exposure limits." *See* DPH Approval attached as Exhibit C, p. 1. DPH also concluded that "the equipment will produce noise no louder than 45 decibels 8 feet away from the nearest building façade" based on the technical studies submitted by Mobilitie, and therefore is in compliance with the noise standards outlined in Article 25.[2] *Ibid.; See also* Noise Study attached as Exhibit K.

---

[2] The Appeal at pp. 4-5 quotes the *FAQs for Small Cells (wireless) on Steel Light and Transit Poles* issued by San Francisco Planning Department, last updated August 2015. *See also* Exhibit I. While this document states broadly that these types of facilities do not use fans, some do, including this Facility. However, Article 25 expressly permits the equipment to make noise that does not exceed 45 decibels measured at a distance of three feet from any residential building façade. Mobilitie's Facility is compliant with these standards. *See* Exhibit C and Exhibit K.

Similarly, the Planning Department found that the Facility complies with the applicable compatibility standard under Article 25 and would not significantly detract from the character of the adjacent residential district. *See* the Planning Department Approval and CEQA Categorical Exemption Determination attached as Exhibit D, p. 1.

Finally, DPW approved the Facility and issued the Permit. *See* the Final Permit attached as Exhibit E. As the approvals of all three agencies confirm, the Facility is well-designed, unobtrusive, will not have any significant impacts, and meets all requirements for approval. The departmental decisions were all based on substantial evidence and consistent with applicable law, including Article 25. The Board should uphold them.

III. DPW and Mobilitie Provided All Required Notice, as Evidenced by Appellant's Participation in the Protest and Appeal Process

The Appeal erroneously complains that "[m]any within the [150 foot radius] were not notified by mail," the notice was affixed to a single pole and allegedly "fell off" at some point, and the notice was not received until June 1 or later and was not postmarked, making the timeframe to protest "at least one week shorter." *See* Appeal, pp. 3-4.

For facilities in the rights-of-way, both Article 25 and DPW Order No. 184504 establish extensive noticing requirements to inform the public of pending Personal Wireless Facility permit applications. DPW and/or the applicant must notify the public of the tentative approval and the opportunity to protest that approval. The public is also informed of the final approval and can appeal that decision to this Board. As described in further detail below, all noticing requirements were satisfied here.

Article 25 requires Mobilitie to provide notice of the Tentative Approval by mail to "[a]ny Person owning property or residing within one hundred and fifty (150) feet of the proposed location" and any "neighborhood association identified by the Planning Department for

any neighborhood within three hundred (300) feet" of the Facility. *See* Public Works Code § 1512(b)(1)(A)-(B). The Declaration for Mailing Notice of Tentative Approval attached as Exhibit F demonstrates that notices of the tentative approvals were mailed to residents and owners, including Appellant, with a postmark date of May 30, 2018. Public Works Code § 1513(a) provides a period of twenty (20) days from the date the notice was mailed and posted for written protests to be submitted to the Department of Public Works. Likewise, DPW's "Notice of Tentative Approval of Application for a Personal Wireless Service Facility Site Permit" provides that "[p]ursuant to San Francisco Public Works Code § 1513, you have 20 days from the later of the date on this notice or the postmark to protest the Application." *See* Exhibit F (underline added). When the Appellant received the notice on June 1, 2018 with a postmark date of May 30, 2018, the Appellant then had the proper time period to respond per Article 25.

In addition to mailing notices, Article 25 also requires Mobilitie to "post a copy of the notice in conspicuous places throughout the block face where the proposed Personal Wireless Service Facility is to be located." *See* Public Works Code § 1512(b)(2). Mobilitie complied with this notice requirement by securely affixing the notice to two pole locations on May 30, 2018, as opposed to the singular pole location that Appellant incorrectly alleges. *See* the Declaration for Posting Notice of Tentative Approval attached as Exhibit G. In addition, protestors received a separate mailed notice of the Final Determination, and the Final Determination was also conspicuously posted thorough the block face at two pole locations by Mobilitie. *See* Declaration for Posting Notice of Final Approval attached as Exhibit H.

IV. The Planning Department Properly Found That the Facility Will Not Significantly Detract from the Character of the Neighborhood

The Appeal alleges that because Shrader Street is classified as having "Excellent Views" in the City's General Plan, the Planning Department failed to protect "San Franciscans' built

environment and quality of life." *See* Appeal, pp. 7-8. Additionally, the Appeal alleges that this type of facility would detract from the streetscape that defines the neighborhood where other utilities are buried. *See* Appeal, pp. 8-9. These statements are all demonstrably false. The Planning Department thoughtfully considered the potential impacts of the Facility, and its conclusions are supported by substantial evidence.

The Planning Department properly analyzed the Facility under the Zoning and Planning Protected Location Compatibility Standards. The Zoning Protected Location Compatibility Standard applies to poles within a Residential zoning district. *See* Public Works Code § 1502. It considers whether the proposed Personal Wireless Service Facility would "significantly detract from any of the defining characteristics of the Residential . . . . zoning district." *Ibid.*

The Planning Protected Location Compatibility standard applied to any "Public Right-of-Way that the General Plan has designated as having views that are rated 'excellent' or 'good'" and "a Public Right-of-Way that is within . . . . a listed or eligible California historic district . . . ." *Ibid.* This standard considers "whether a proposed Personal Wireless Service Facility would significantly impair the views of any of the important buildings, landmarks, open spaces, or parks that were the basis for the designation of the street as a view street."[3] *Ibid.*

The Planning Department determined that the Facility "**WOULD NOT** significantly detract from the character of the adjacent residential/commercial/mixed-use Districts, Scenic Vistas; or potential and or known historic Buildings[/]Districts." *See* Exhibit D, p. 1 (emphasis in original). These conclusions are based on substantial evidence.

---

[3] A "Tier B Personal Wireless Service Facility" is a Personal Wireless Service Facility for which the proposed location for the facility is in a Planning Protected Location or Zoning Protected Locations. *See* Public Works Code § 1502. The "Tier B Compatibility Standard" means that the applicant "has demonstrated that the proposed Personal Wireless Service Facility would not significantly detract from any of the defining characteristics of the Planning Protected Location or Zoning Protected Location." *Ibid.* Thus, the Tier B standard encompasses the Planning and Zoning Protected Locations compatibility standards.

The Planning Department rendered its recommendation following review of the architectural plans, photo simulations, and associated DPW Wireless Application. *See* Exhibit D, p. 1. The minimum requirements for the site permit application include items such as identification of equipment, proof of permission, proof of authority to use the public rights-of-way, location drawings, photographic simulations and photographs, proof of compliance with insurance requirements, and proper use of utility, transit or street light pole statement. DPW Order No. 184504 § 5; *see also* Public Works Code §1500(b). Planning rendered its recommendation after reviewing these materials, including plans and photo simulations.

The Appeal contends that only the primary antenna enclosure was called out and "virtually all neighbors were unaware of" the secondary equipment enclosure. The photo simulations show the Facility and its surroundings from multiple angles. *See* Exhibit A. The photo simulations of the Facility (Exhibit A) and the plans (Exhibit B) clearly show both the primary antenna enclosure and the secondary equipment enclosure attached to the pole, with an arrow pointing to the overall Facility on the photo simulations. Furthermore, because of the format of the Public Works application and the unique nature of this Facility having one pole top antenna and one mid-pole UE relay antenna, the application fields for "Antenna(s)" and "Primary Equipment" fields were used for the single pole top antenna and enclosure, while the "Secondary Equipment" and "Other Equipment" fields were used for the UE relay antenna, radio unit, and other appurtenant equipment for the secondary enclosure. Both antennas are accounted for on all plans and reports reviewed by all applicable departments. Both the primary pole top antenna and the UE relay in the secondary enclosure are specifically called out in the Notice of Final Determination. *See* Exhibit H.

The Planning Department also attached fifteen conditions to the Facility to ensure that any potential impact would be minimized to the extent feasible. *See* Exhibit D, pp. 4-5. These

comprehensive conditions rage from requiring a street tree to minimizing equipment size and configuration to regulating paint colors. *Ibid.* The conditions go so far as to regulate the size of an equipment signage (4" by 6"), the background color of the sticker (must match the surface to which it adheres), and the color of the logo and font (white). *See* Exhibit D, p. 4, Condition No. 6.

The Planning Department's 2015 small cell program flyer explained that the small cell wireless facilities comply with the City's General Plan by "providing robust communications that are well-designed, these systems can improve connectivity for residents, visitors, and businesses . . . ." *See* Exhibit I, at p. 8. Additionally, it concluded that:

> • The design of these facilities would not detract from streetscapes, historic districts or other areas that define individual neighborhoods and the City as a whole. . . .
> • These facilities would enhance connectivity in the event of an emergency.
> • The facilities would not affect the use of parks or open space, nor would they impair access to sunlight or detract from scenic vistas.

Ibid.

In sum, the Planning Department employed a considered approach and its determination was based on substantial evidence.

V. While Private Views Are Not Legally Protected, the Planning Department Has Still Ensured That Private Views Will Not Be Impaired

The Appeal contends that the "Application does not comply with Planning Department Condition #10" and generally alleges that the Planning Department continuously moved the baseline as to what constitutes an obstructed view. *See* Appeal, pp. 6-8. To the extent Appellant is arguing that their private views will be diminished, this argument also fails. As discussed above, at least three City department thoroughly reviewed the Permit and determined the Facility is compatible with its surroundings. Additionally, DPW Order No. 184504 establishes that when the Planning Department determines "whether a proposed Personal Wireless Service Facility

would significantly impair the views of any important buildings, landmarks, open spaces, natural vistas, or parks, the Planning Department shall only consider views of buildings, open spaces, natural vistas, or parks from the Public Rights-of-Way. The Planning Department shall not take into account views from private properties." *See* DPW Order No. 184504 § 7(D).

However, while not required by Article 25, the Permit includes a condition that the Facility must not "obstruct the view from, or the light into any adjacent residential window." Exhibit D, p. 4, Condition No. 10. DPW defines "[s]ubstantially obstruct views from or block light into residential windows" in DPW Order No. 184504 to mean:

> The mounting of equipment enclosures either eight feet (8') away from a window (if attached to the top of the pole), or six feet (6) away from a window (if attached to a side arm mount), as measured from the nearest portion of the equipment enclosure, would not typically be expected to result in substantial impairment; provided that the diameter of the equipment is not more than twenty inches (20").

See DPW Order No. 184504, § 2(B)(39).

The pole upon which the Facility will be located is approximately 14'-10" from the façade of nearest building and neither of the enclosures are greater than 20" in diameter. *See* Exhibit B, pp. A-1, A-2, and D-1. This is well over the six-foot and eight-foot distances that may constitute view obstruction, as confirmed in the Facility plans and photo simulations. In sum, the Facility will not substantially obstruct views from or block light into any residential window as those terms are defined under Article 25 and DPW Order No. 184504.

VI. This Facility Will Be Located on a Replacement Pole, Not a "New" Pole

The Appeal incorrectly claims that Mobilitie does not comply with Public Works Condition No. 2 which states that "[n]o new poles shall be erected or placed in underground districts" and that Mobilitie is installing a new pole in contravention of this condition. *See* Appeal, pp. 5-6. This condition of the Permit is referring to the installation of a new pole where no vertical infrastructure exists. Mobilitie is replacing the existing street light pole with a new

street light pole and foundation per City standards in the same location as the existing pole. *See* Exhibit B, pp. A-4 and D-2. SFPUC will continue to be the owner of this replacement pole per Section 8.2 of the Amended and Restated Master License for Outdoor Distributed Antenna System Pole Installation by and between the City and County of San Francisco through its Public Utilities Commission and Mobilitie, LLC dated April 1, 2016 (the "Master License"). The new replacement pole and foundation will ensure the pole remains structurally sound when the equipment and enclosures for the Facility are attached to it. Therefore, Mobilitie remains in compliance with this Condition No. 2 per the Project Plans at Exhibit B that were approved by all applicable departments.

VII. Claims About Financial Security Requirements for the Facility

The Appellant also raises concerns about fire risk and attempts to conflate unrelated "cell site fires" and unrelated recent Pacific Gas & Electric Company fire issues to the type of facility to be installed at this location, claiming that the cost of any damages outside of any required financial security provided by Mobilitie to the City must be "borne by the adjacent homeowners." *See* Appeal, p. 9. This is incorrect. In addition to any financial security provided by Mobilitie to the City, Section 19 of the Master License requires Mobilitie to maintain certain insurance coverage amounts, including Commercial General Liability insurance with broad form property damage with limits of at least $2 million combined single limit for each occurrence. Mobilitie has furnished all required financial securities and evidence of insurance coverage required under Article 25 and the Master License.

VIII. The FCC, Not the City, Regulates Radio Frequency Emissions

The Appeals claims that the Department of Public Health incorrectly determined the application complies with the Health Compliance Standard because a different model of equipment for the mid-level antenna was described in the DPH's April 24, 2018 report, and any

change in the equipment requires a new review by DPH. *See* Appeal, p. 8. The Appellant further raises miscellaneous RF emission concerns based on the age of the Telecommunications Act of 1996, the mandated warning signage, unspecified concerns related to wireless facilities at firehouses, the presence of an elementary school over 700 feet away, and alleged medical experts living next door to the Facility location. *See* Appeal, pp. 5, 10-11. The Appellant is erroneous on all counts.

First, DPH's April 24, 2018 report contains a clerical error. The subject line, first paragraph, and fifth paragraph correctly refer to the Airspan Model iRelay 460 antenna, otherwise referred to herein as the UE relay antenna. The clerical error is found in the second paragraph which erroneously refers to a "Fastback Networks Model IBR 1300 Microwave antenna" instead of the UE relay. The RF Study prepared by Hammett & Edison, Inc. and submitted to the City for purposes of this Permit approval examines the correct Airspan Model iRelay 460 wireless relay unit, in addition to the Alpha Wireless pole top antenna. *See* RF Study attached as Exhibit J. Therefore, none of the equipment changed from what was submitted by Mobilitie to DPH that allowed DPH to issue this report, and no resubmission to DPH is required merely because of a clerical error in the second paragraph of DPH's April 24, 2018 report.

Second, the maximum effective radiated power from the Facility is a combined total of 154 watts factoring in both described antennas. *See* Exhibit J, p. 2. More importantly, the maximum calculated RF exposure level at ground level will not exceed 0.012 mW/cm^2, or 1.2% of the applicable FCC public exposure limit. *Ibid.* The maximum calculated RF exposure level at the top floor of the three-story residence at 1509 Shrader Street is 6.9% of the public exposure limit. *Ibid.* Additionally, DPH requires post-installation testing to verify that RF emissions calculated in the report match the actual emissions. *See* Exhibit C, p. 2. The RF exposure level attributed to these antennas is a small fraction of the federal allowable limit, thereby limiting any

further or additional regulation of the Facility by the City under applicable law as it pertains to the RF emissions, despite the wrongful requests from the Appellant. *See* 47 U.S.C. § 332(c)(7)(B)(iv).

IX. Conclusion

In conclusion, this Board should deny the Appeal and allow Mobilitie to move forward with the Facility. Representatives of Mobilitie will be present at the hearing to answer any questions.

Sincerely,
Mobilitie, LLC

David Nagele

cc: Bradley Russi, Deputy City Attorney (brad.russi@sfgov.org)
Gillian Gillett, Department of Public Works (gillian.gillett@sfgov.org)
Ashley Lindsay, Planning Department (ashley.lindsay@sfgov.org)
Brian D. Sedar, Neighbors of Upper Cole Valley (briandsedar@gmail.com)
James Singleton, Mobilitie, LLC (jsingleton@mobilitie.com)

Schedule of Exhibits

18WR-0033 (1509 Shrader Street)

Exhibit A: Photo Simulations
Exhibit B: Project Plans
Exhibit C: Department of Public Health Approval
Exhibit D: Planning Department Approval and CEQA Categorical Exemption Determination
Exhibit E: Final Permit
Exhibit F: Declaration for Mailing Notice of Tentative Approval
Exhibit G: Declaration for Posting Notice of Tentative Approval
Exhibit H: Declaration for Posting Notice of Final Approval
Exhibit I: *FAQs for Small Cells (wireless) on Steel Light and Transit Poles* issued by San Francisco Planning Department, updated August 2015
Exhibit J: RF Exposure Study by Hammett & Edison, Inc., dated February 16, 2018
Exhibit K: Noise Study by Hammett & Edison, Inc., dated November 3, 2017

EXHIBIT A

[Photo Simulations attached behind this page (2 pages).]

Exhibit A

view from Shrader Street looking northwest at site

9CAB007733
Adjacent to 1507 Shrader Street, San Francisco, CA
Photosims Produced on 4-18-2017

Existing

Proposed

AdvanceSi
Photo Simulation Solutions
Contact (925) 202-8507

view from Shrader Street looking south at site

9CAB007733
Adjacent to 1507 Shrader Street, San Francisco, CA
Photosims Produced on 4-18-2017

AdvanceSim
Photo Simulation Solutions
Contact | 925 | 202 8507

mobilitie

EXHIBIT B

[Project Plans attached behind this page (9 pages).]

Exhibit B

mobilitie
intelligent infrastructure

SITE ID: 9CAB007733

ADJACENT TO 1509 SHRADER ST.,
SAN FRANCISCO, CA 94117
37.761245, -122.450591

(N) (28'-6" AGL) GALVANIZED STEEL (PUC) STREET LIGHT POLE

SITE COMPLETION CHECKLIST

DURABLE PAINT ANTENNAS, MOUNTING BRACKETS AND RADIO RELAY UNITS TO BE PAINTED "TO MATCH EXISTING POLE COLOR" USING DURABLE PAINT (E G SHERWIN WILLIAMS FRAZEE OR EQUIVALENT)

CABLING CABLING (TO MATCH EXISTING POLE COLOR) TO BE INSTALLED IN A TIDY MANNER WITHOUT EXCESS CABLE LOOPS)

SPACING OF SUPPORT ELEMENTS SUPPORT EQUIPMENT TO BE CLUSTERED (VERTICALLY) AS CLOSE AS IS TECHNICALLY FEASIBLE ON POLE

LOGO REMOVAL ALL EQUIPMENT LOGOS OTHER THAN REQUIRED BY REGULATION (E G NODE IDENTIFICATION OF SHUTDOWN SIGNAGE) SHALL BE PAINTED OVER OR REMOVED RAISED / DEPRESSED LOGOS / TEXT IF PRESENT TO BE SANDED OFF, OR SIMILAR REMOVED / FILLED

SIGNAGE FCC MANDATED RF WARNING SIGNAGE SHALL FACE OUT TO STREET WHEN PLACED IN FRONT OF OR NEAR WINDOW SIGNAGE SHALL FACE TOWARD BUILDING IF

GENERAL NOTES

THE FACILITY IS NOT FOR HUMAN HABITATION A TECHNICIAN WILL VISIT THE SITE AS REQUIRED FOR ROUTINE MAINTENANCE THE PROJECT WILL NOT RESULT IN ANY SIGNIFICANT DISTURBANCE OR EFFECT ON DRAINAGE, NO SANITARY SEWER SERVICE POTABLE WATER, OR TRASH DISPOSAL IS REQUIRED AND NO COMMERCIAL SIGNAGE IS PROPOSED

WITH THE SURROUNDING PAVING
EXISTING PAVING DISTURBED BY DAS CARRIER CONSTRUCTION SHALL BE RESTORED TO MATCH THE EXISTING PAVING BY DAS CARRIER CONTRACTOR

PAVING DETAILS
CONTRACTOR SHALL NOT REMOVE OR DAMAGE EXISTING GRANITE CURB STONES

SITE INFORMATION

CARRIER	SPRINT
APPLICANT ADDRESS	2955 RED HILL AVE COSTA MESA CA 92626
APPLICANT CONTACT.	JAMES SINGLETON
APPLICANT PHONE	[redacted]
[redacted]	JAMES SINGLETON@MOBILITIE COM
PUBLIC ROWPRIVATE PROPERTY	[redacted] OW
[redacted]	[redacted]
NEAREST APN(S)	[redacted]
[redacted]	[redacted]
[redacted]	[redacted]
[redacted]	22 [redacted]
[redacted]	83
[redacted]	N/A
OU	[redacted]
[redacted]	CITY OF SAN FRANCISCO

DO NOT SCALE DRAWINGS

SUBCONTRACTOR SHALL VERIFY ALL PLANS EXISTING DIMENSIONS & FIELD CONDITIONS ON THE JOB SITE & SHALL IMMEDIATELY NOTIFY THE ENGINEER IN WRITING OF ANY DISCREPANCIES BEFORE PROCEEDING WITH THE WORK OR BE RESPONSIBLE FOR SAME

LOCATION MAPS

VICINITY MAP

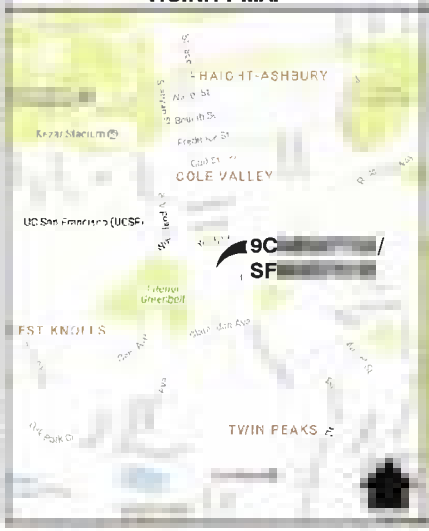

LOCAL MAP

APPROVALS

THE FOLLOWING PARTIES HEREBY APPROVE AND ACCEPT THESE DOCUMENTS AND AUTHORIZE THE CONTRACTOR TO PROCEED WITH THE CONSTRUCTION DESCRIBED HEREIN ALL CONSTRUCTION DOCUMENTS ARE SUBJECT TO REVIEW BY THE LOCAL BUILDING DEPARTMENT AND ANY CHANGES AND MODIFICATIONS THEY MAY IMPOSE

	PRINT NAME	SIGNATURE	DATE
STRUCTURE OWNER	R O W		
IMPLEMENTATION ENG			
RF ENGINEER			
CONSTRUCTION			

PROJECT DESCRIPTION

MOBILITIE PROPOSES TO ATTACH A NEW PERSONAL WIRELESS SERVICE FACILITY TO A NEW GALVANIZED STEEL STREET LIGHT POLE LOCATED WITHIN THE EXISTING ROW THE SCOPE WILL CONSIST OF THE FOLLOWING

[redacted] 2-6" DIA x 5'-6" CONCRETE POLE

INSTALL ONE (1) 7 DIA x 13 TALL UE RELAY (1)-9 7" TALL x 12 9" WIDE x 6 3" DEEP NOKIA RADIO [redacted] ED INSIDE (1)-35" TALL x 15 5 WIDE x 9 DEEP (MMS) SHROUD ENCLOSURE
PROPOSED FACILITY WILL NOT EMIT ANY SOUND

ENGINEERING

2015 INTERNATIONAL BUILDING CODE
2017 NATIONAL ELECTRICAL CODE
TIA/EIA 222 G-2 OR LATEST EDITION
LOCAL BUILDING/PLANNING CODE

- GENERAL ORDER 95 CA ONLY
- GENERAL ORDER 96 CA ONLY

DRAWING INDEX

SHEET NO:	SHEET TITLE
[redacted]	[redacted]
A-2	E AT
A-3	SUN SHIELD / CONDUIT ROUTING DETAIL
A-4	[redacted]

DESIGN TEAM

MOBILITIE
2955 RED HILL AVE
COSTA MESA CA 92626
PM SYLVETTE CUEZON
PM (562) 202-0185
PM: sylvette cuezon@mobilitie com

Dig Alert
[redacted] before you dig
[redacted] IT

mobilitie
intelligent infrastructure

CES [redacted]

10640 Sepulveda Blvd Suite 1 Mission Hills, CA 91345
Phone No (818)898 2352 Fax No (818)898-9186

A&E SERVICES

DRAWN BY MD

[redacted] TE [redacted] TION

SITE ID:
9CAB007733
SITE NAME: SF90XS701B

NEAREST ADDRESS:
ADJACENT TO 1509 SHRADER ST ,
SAN FRANCISCO, CA 94117

SHEET TITLE
TITLE SHEET

SHEET NUMBER
T-1

PRIOR TO CONSTRUCTION GENERAL CONTRACTOR TO VERIFY CLEARANCES ARE MET FOR PLACEMENT OF NEW FACILITIES INCLUDING BUT NOT LIMITED TO

GOVERNING CODE ENGINEER OF RECORD HAS NOT CONDUCTED A FIELD VERIFICATION OR LAND SURVEY AND DOES NOT GUARANTEE ACCURACY OF SHOWN PROPERTY LINES SUBSTRUCTURES HARDSCAPE, HEIGHTS AND OTHER ELEMENTS IN THE RIGHT-OF-WAY ALL PROPERTY LINES, SUBSTRUCTURES AND OTHER ELEMENTS ARE SHOWN PER CITY AND COUNTY GIS MAPS FACILITY MAPS AND PLAT MAPS CONTRACTOR TO STOP WORK AND NOTIFY ENGINEER OF RECORD

MAKE-READY NOTES

INSTALL (1) (N) OMNI DIRECTIONAL ANTENNA CENTERED @ TOP OF POLE
INSTALL (1) (N) UE RELAY AND (1) (N) NOKIA RADIO INSIDE (MMS) SHROUD ENCLOSURE @ 12:00 POSITION

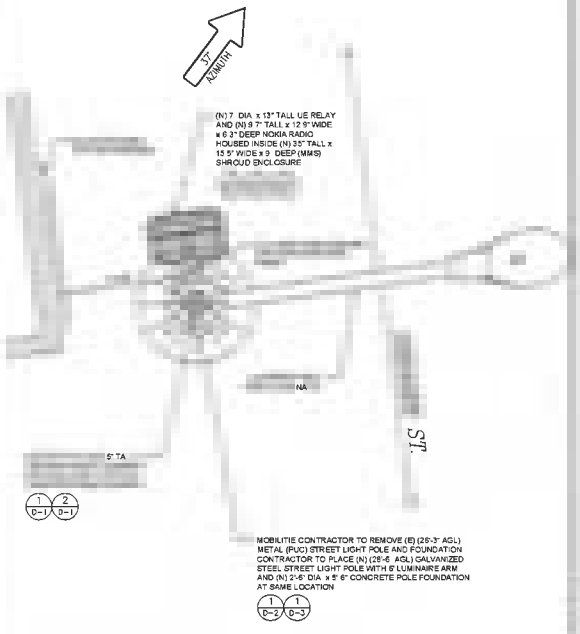

MAKE-READY NOTES/RISER DIAGRAM

24"x36" SCALE: NTS
11"x17" SCALE: NTS

2

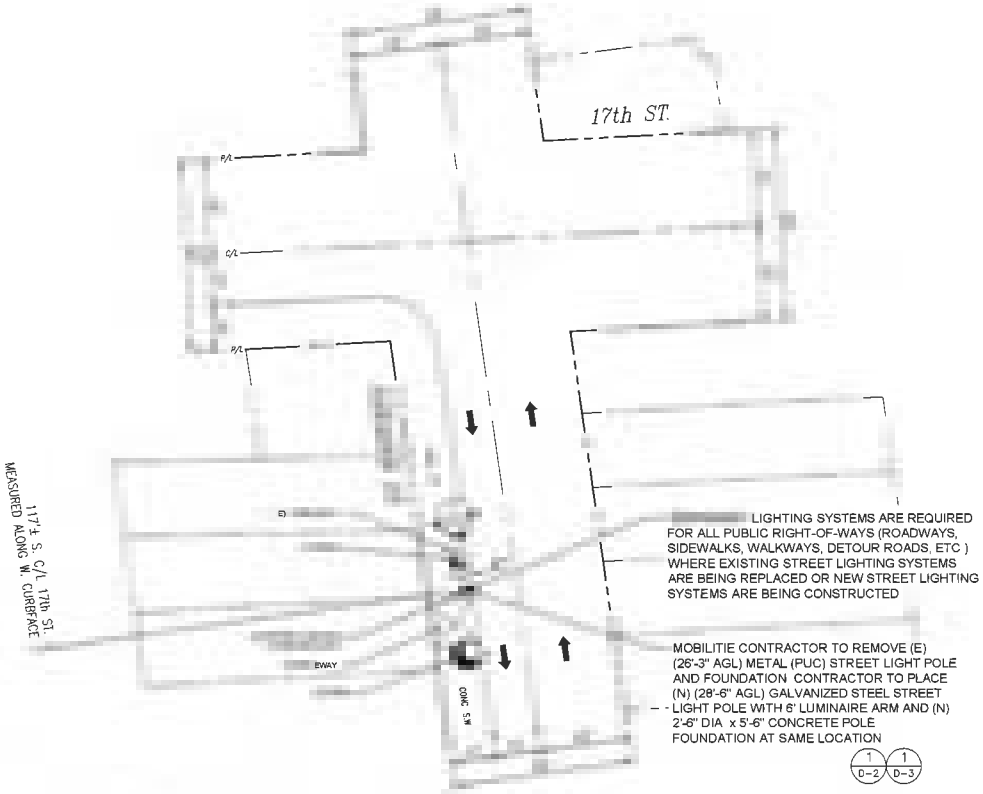

EDGE OF SIDE	SYMBOL	DESCRIPTION	SYMBOL	DESCRIPTION
		A (SUNDRY)		ANCHOR
				HYDRANT
				VALVE
				MANHOLE
				SEWER MANHOLE
				SQUARE WALL
				ROUND WALL
				CROSSWALKS
				TRAFFIC FLOW
DIA	WIDE			ADA CURB RAMP

SITE PLAN

24"x36" SCALE: 1 = 20'-0"

20 10 0 20

1

mobilitie
intelligent infrastructure

CeS

Fax No (818)889-9186

A&E SERVICES

DRAWN BY

IT IS A VIOLATION OF LAW FOR ANY PERSON, UNLESS THEY ARE ACTING UNDER THE DIRECTION OF A LICENSED PROFESSIONAL ENGINEER TO ALTER THIS DOCUMENT

SITE ID:
9CAB007733
SITE NAME: SF90XS701B
NEAREST ADDRESS:
SAN FRANCISCO, CA 94117

SHEET TITLE
SITE PLAN / RISER DIAGRAM

SHEET NUMBER
A-1

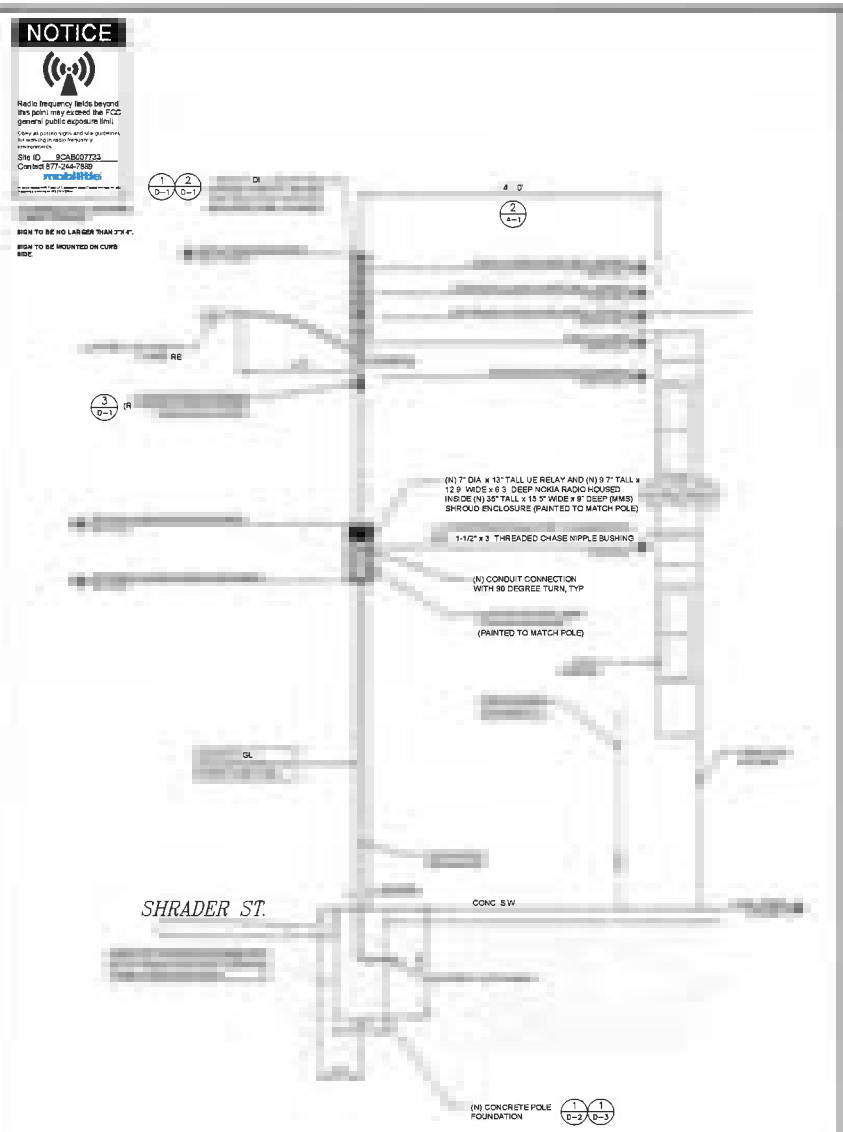

SIDE VIEW
LOOKING SOUTH

(N) ELEVATION

24"x36" SCALE: 1" = 3'-0"
11"x17" SCALE: 1" = 6'-0"

2

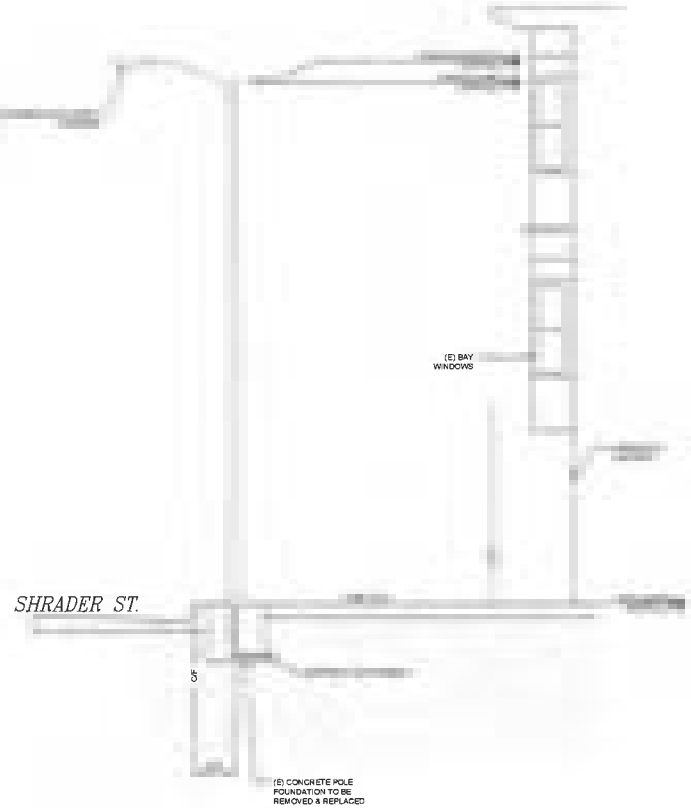

SIDE VIEW
LOOKING SOUTH

(E) ELEVATION

24"x36" SCALE: 1" = 3'-0"
11"x17" SCALE: 1" = 6'-0"

1

CeS
10640 Sepulveda Blvd. Suite 1 Mission Hills CA 91345
Phone No (818)898-2352 Fax No (818)898-9186
A&E SERVICES

DRAWN BY

2/9/21	UDATED PER JK COMMENTS
DATE	

SITE ID:
9CAB007733
SITE NAME: SF90XS701B

NEAREST ADDRESS:
ADJACENT TO 1509 SHRADER ST.,
SAN FRANCISCO, CA 94117

SHEET TITLE

ELEVATIONS

SHEET NUMBER

A-2

NOTES:

- ONLY FLEX CONDUITS ARE TO BE USED FOR CABLE INSTALLATION
- ONLY 90 DEGREE DIN CONNECTORS ARE TO BE INSTALLED
- 1-1/2" X 3" THREADED CHASE NIPPLE ALLOWS FOR PASSAGE OF CABLING FROM POLE INTERNAL TO SHROUD INTERNAL
- WEATHER PROOF/WATER TIGHT CHASE NIPPLES ARE TO BE USED ON CABLE ACCESS PORT OPENINGS (CHASE NIPPLE TO BE SAME COLOR AS EXIST POLE)
- GC WILL DRILL OUT 2 1/4" HOLE IN POLE BODY AT LOCATION SHROUD WILL BE MOUNTED, AND INSTALL THE CHASE NIPPLE CONDUIT INTO THE HOLE WITH BUSHINGS
- CHASE NIPPLE CONDUIT: ALLOWS FOR PASSAGE OF CABLING FROM POLE INTERNAL TO SHROUD INTERNAL

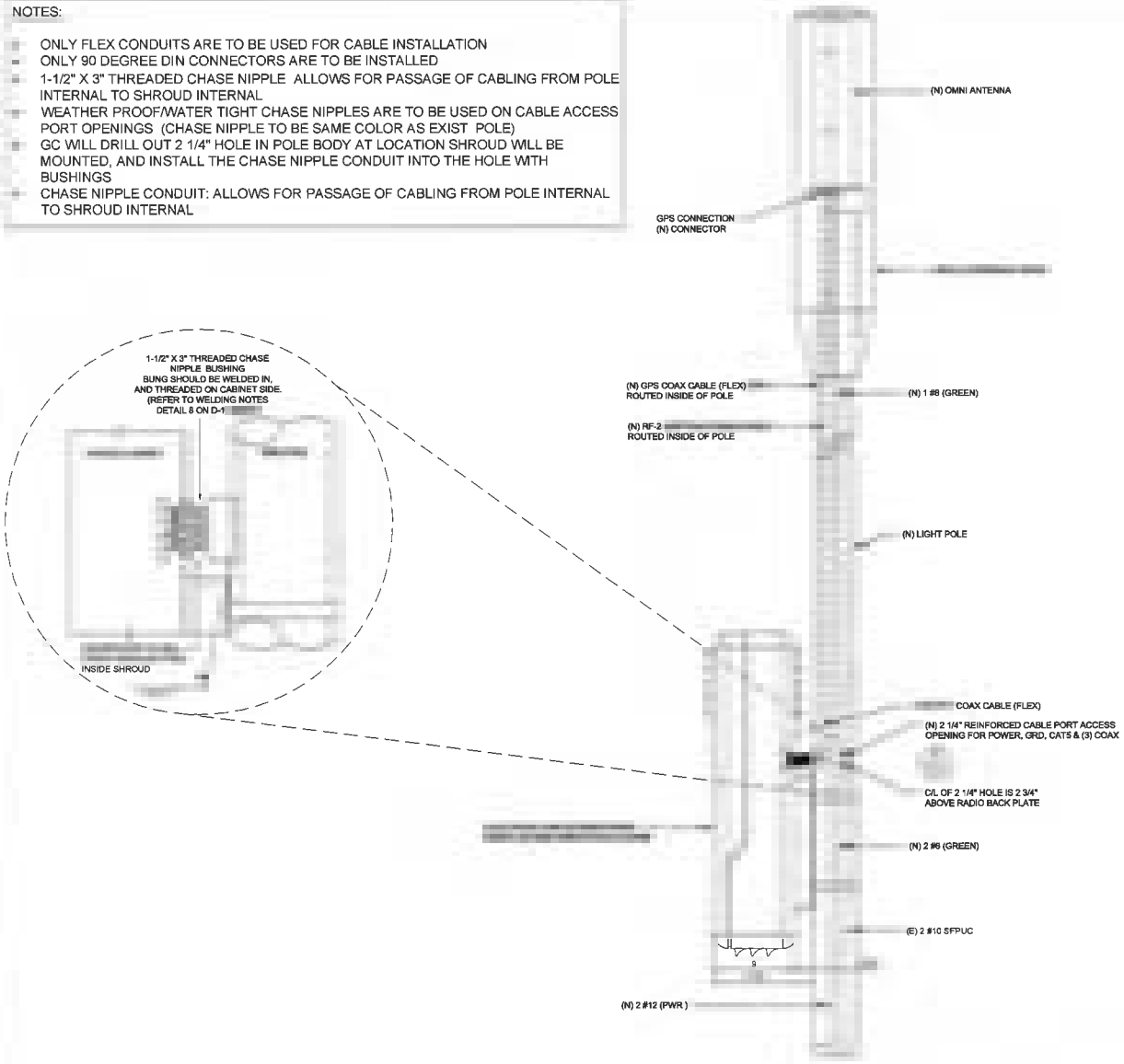

PROPOSED SUN SHIELD / CONDUIT ROUTING

24"x36" SCALE: NTS
11"x17" SCALE: NTS

1

10640 Sepulveda Blvd. Suite 1 Mission Hills, CA 91345
Phone No. (818)898-2352 Fax No. (818)898-9188

A&E SERVICES

DRAWN BY

04	UPDATED EQUIPMENT	
TE		DN

SITE ID:
9CAB007733
SITE NAME: SF90XS701B

SAN FRANCISCO, CA 94117

SHEET TITLE
SUN SHIELD / CONDUIT ROUTING DETAIL

SHEET NUMBER
A-3

PUC CONDUIT WIRE SCHEDULE

SCHEDULE A:
CONDUIT SIZE 1.5"
CITY (E) (2) #10
MOBILITIE (N) (2) #12 POWER AND (N) (2) #6 GROUND (GREEN)

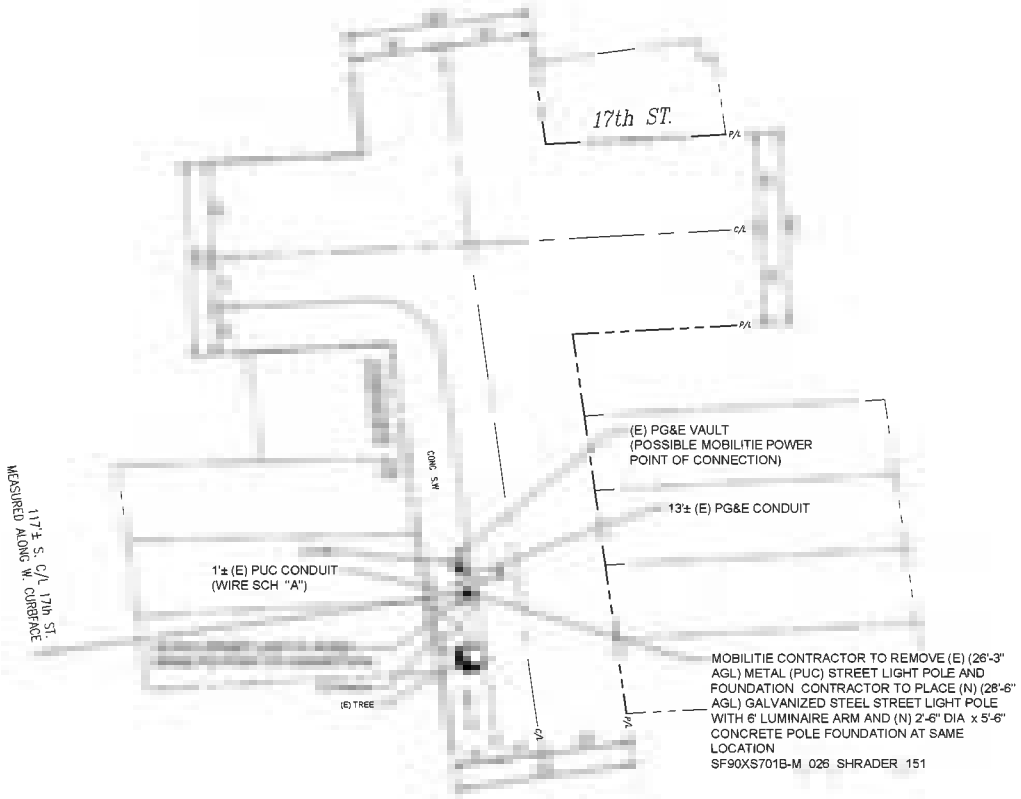

PUC POINT OF CONNECTION PLAN

24"x36" SCALE: 1" = 20'-0"
11"x17" SCALE: 1" = 40'-0"

20' 10' 0' 20' | 1

cable engineering services
10640 Sepulveda Blvd Suite 1 Mission Hills CA 91345
Phone No (818)898-2352 Fax No. (818)898-9186

A&E SERVICES

DRAWN BY
CKED B

DATE

SITE ID:
9CAB007733

NEAREST ADDRESS:
ADJACENT TO 1509 SHRADER ST., SAN FRANCISCO, CA 94117

SHEET TITLE
PUC POINT OF CONNECTION PLAN

SHEET NUMBER
A-4

SC	EXISTING 1 5" PUC CONDUIT	CITY (E) 2 #10 MOBILITIE (N) (2) #12 POWER, (N) (2) #6 GROUND (GREEN)	±8 3%

			KWh
		/A	
			76

PU

- (2) #12 AWG (N) MOBILITIE POWER

GROUNDING CONFIGURATION

NEW (GREEN) STRANDED TINNED #6 GROUND CONDUCTOR TO EXISTING CONDUIT BOND RING

MOBILITIE EQUIPMENT
EN

(N) MOBILITIE ANTENNA HOUSING / SHROUD

(N) LUMINAIRE

(N) 1 #6 MOBILITIE (GREEN)

(E) 2 #10 SFPUC

(N) UE RELAY AND (N) NOKIA RADIO INSIDE (MMS) SHROUD ENCLOSURE

ENCLOSURE

Outer Construction	Nylon Maxform 7210 TPU (Thermo Plastic Olefin)
Dimensions (W X H D)	12.5" x 33.0 x 9.0"
Finish	Matte (Color of painted high emissivity finishes
Mounting Options	Pole Mount Wall Mount (option available)
Weight (Shroud Enclosure)	12 lbs
Weight (Shroud Enclosure + Internal Assy)	45 lbs
Weight (Fully Configured)	100 lbs Max
Rating	NEMA 3R
Approvals	cULus/IPx as Req
Electric	Plate mounted DIN – sized for 1.5" conduit
	120VAC 50/60Hz, 5.3A Max
	GCMF
	3 x 7A DIN mount input breaks
	1 x 40kAIC DIN mount surge suppressor
	16 Latch lead-on-the-pole

ONE-LINE DIAGRAM

(N) REMOTE RADIO HEAD

(N) 7 AMP IN LINE FUSE

(E) POWER SERVICE

CONTRACTOR TO LEAVE 30" OF NEW #12 AWG X2 FOR SFPUC (SERVICE COIL) CONNECTIONS TO EXISTING LIGHTING CIRCUIT AND FUSE CONNECTIONS
SFPUC TO PROVIDE FUSE, MAKE ALL FINAL CONNECTIONS AND ENERGIZE NEW MOBILITIE CIRCUIT, GC NOT TO MAKE CONNECTIONS IN PULL BOX OTHER THAN GROUNDING (CONTRACTOR TO LABEL FUSE AND CIRCUIT AT THE POC)

FUSE TO BE UPGRADED TO 40 AMP ON MAIN CIRCUIT
FUSE HOLDER WITH BOOT SHALL BE BY
SC-40 40 AMP.

(N) 2 #12 MOBILITIE (PWR)

(N) 2 #6 MOBILITIE (GREEN)

NEW MOBILITIE 7 AMP FUSE TO BE HOUSED INSIDE (E) N-16 BOX, TO BE INSTALLED AND ENERGIZED BY SFPUC

GRADE

PG&E VAULT
MOBILITIE POWER

MOBILITIE TO ADD #8 AWG SERVICE WIRE FROM PG&E POC TO MOBILITIE POC BOX
SFPUC USES THE FOLLOWING WIRE COLORS:
A) RED - HOT
B) BLACK - HOT
C) WHITE - NEUTRAL
D) GREEN - GROUND

(E) PG&E CONDUIT

(E) 2 #10 SFPUC
(N) 2 #12 MOBILITIE (PWR)
(N) 2 #6 MOBILITIE (GREEN)

(E) 1 5" PUC CONDUIT
(WIRE SCH "A")

PUC SINGLE LINE

24"x36" SCALE: NTS

1

mobilitie

CeS

10640 Sepulveda Blvd Suite 1 Mission Hills CA 91345
Phone No (818)898 2352 Fax No (818)898-9186

A&E SERVICES

DRAWN BY MD

DATE	PTION

SITE ID:
9CAB007733
SITE NAME: SF90XS701B

NEAREST ADDRESS:
ADJACENT TO 1508 SHRADER ST ,
SAN FRANCISCO, CA 94117

SHEET TITLE
PUC SINGLE LINE

SHEET NUMBER
A-5

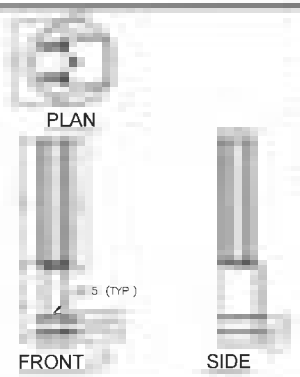

MANUFACTURER:
ALPHA WIRELESS
MODEL: AW3477-S1-G
HEIGHT: 29 5 IN
DIAMETER: 4 5 IN Ø
WEIGHT: 7 LBS

ALPHA WIRELESS

ALPHA AW3477-S1-G OMNI (B41 1

MANUFACTURER: NOKIA
MODEL: FWHR B41 HP
(OR APPROVED EQUAL)
HEIGHT: 9.7 IN
WIDTH: 12.9 IN
DEPTH: 8.3 IN
WEIGHT: 24.7 LBS

NOKIA

NOKIA RADIO FWHR B41 HP 4

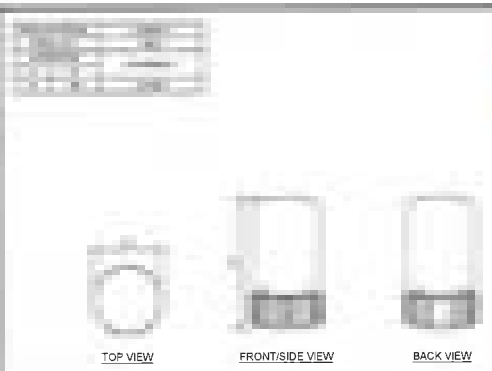

UE RELAY 6

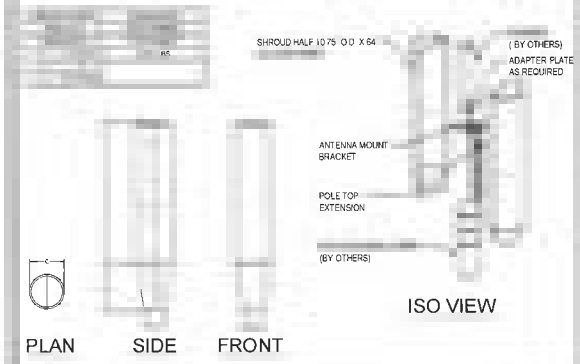

ANTENNA SHROUD 2

MANUFACTURER:
: 35 IN
15.5 IN
9 IN
WEIGHT: 12 LBS

ELTEK

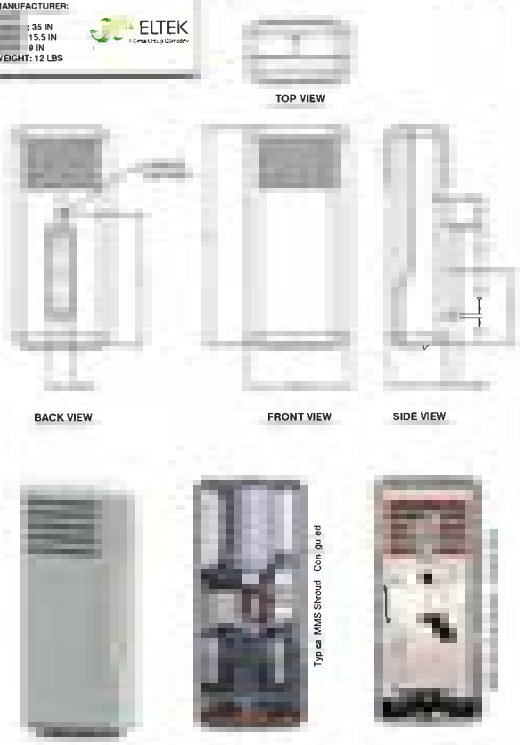

(MMS) SHROUD ENCLOSURE 5

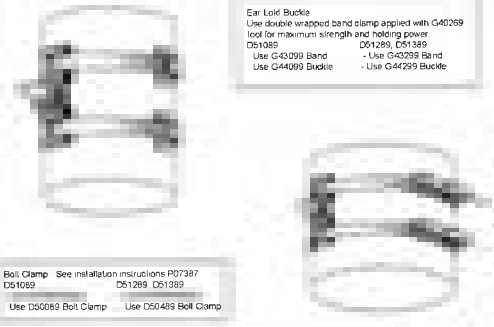

STAINLESS STEEL BANDS 7

NOTICE

Radio frequency fields beyond this point may exceed the FCC general public exposure limit

Obey all posted signs and site guidelines for working in radio frequency environments

Site ID: 9CAB007733
Contact 877-244-7889

mobilitie

ANTENNA RF SIGNAGE 3

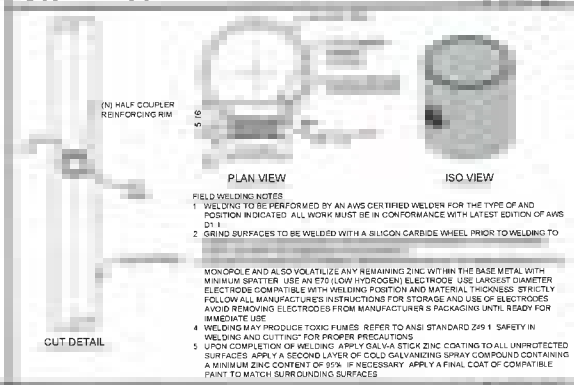

FIELD WELDING NOTES
1 WELDING TO BE PERFORMED BY AN AWS CERTIFIED WELDER FOR THE TYPE OF AND POSITION INDICATED ALL WORK MUST BE IN CONFORMANCE WITH LATEST EDITION OF AWS D1 1
2 GRIND SURFACES TO BE WELDED WITH A SILICON CARBIDE WHEEL PRIOR TO WELDING TO

MONOPOLE AND ALSO VOLATILIZE ANY REMAINING ZINC WITHIN THE BASE METAL WITH MINIMUM SPATTER USE AN E70 (LOW HYDROGEN) ELECTRODE USE LARGEST DIAMETER ELECTRODE COMPATIBLE WITH WELDING POSITION AND MATERIAL THICKNESS STRICTLY FOLLOW ALL MANUFACTURE'S INSTRUCTIONS FOR STORAGE AND USE OF ELECTRODES AVOID REMOVING ELECTRODES FROM MANUFACTURER S PACKAGING UNTIL READY FOR IMMEDIATE USE
4 WELDING MAY PRODUCE TOXIC FUMES REFER TO ANSI STANDARD Z49 1 SAFETY IN WELDING AND CUTTING" FOR PROPER PRECAUTIONS
5 UPON COMPLETION OF WELDING APPLY GALV-A STICK ZINC COATING TO ALL UNPROTECTED SURFACES APPLY A SECOND LAYER OF COLD GALVANIZING SPRAY COMPOUND CONTAINING A MINIMUM ZINC CONTENT OF 95% IF NECESSARY APPLY A FINAL COAT OF COMPATIBLE PAINT TO MATCH SURROUNDING SURFACES

ACCESS PORT DETAIL 8

mobilitie

CeS

10640 Sepulveda Blvd Suite 1 Mission Hills CA 91345
Phone No (818)898-2352 Fax No (818)898-9188

A&E SERVICES

SITE ID:
9CAB007733
SITE NAME: SF90XS701B

ADJACENT TO 1509 SHRADER ST., SAN FRANCISCO, CA 94117

SHEET TITLE
EQUIPMENT DETAILS

SHEET NUMBER
D-1

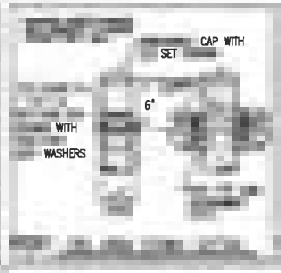

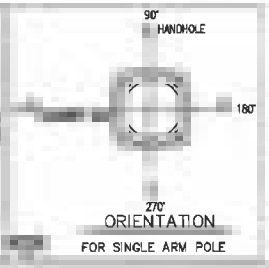

ORIENTATION
FOR SINGLE ARM POLE

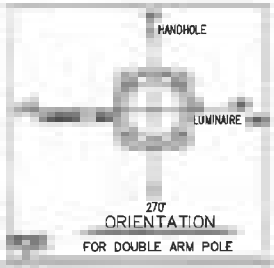

ORIENTATION
FOR DOUBLE ARM POLE

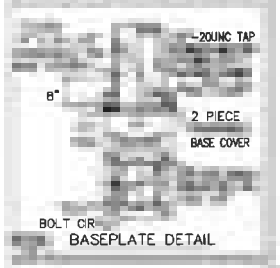

BASEPLATE DETAIL

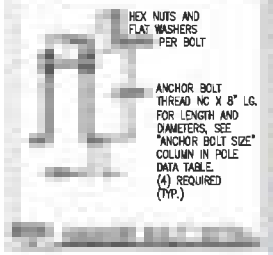

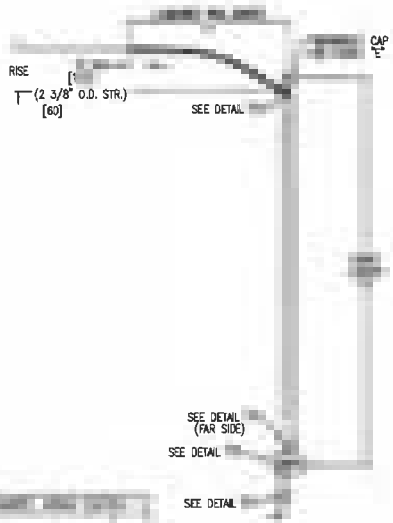

TYPE "PL" SNGL

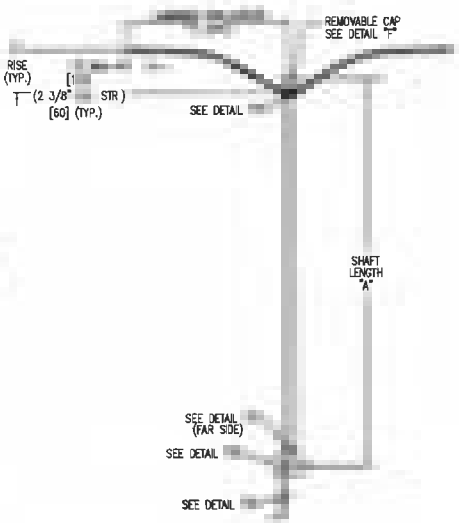

TYPE "PL" DBL

SHAFT LENGTH "A"	END O.D. X BASE O.D. X THICKNESS	RISE
4'-0"	2 3/8" X 3" X .120"	3
6'-0"	2 3/8" X 3 5/16" X .120"	6

POLE DESCRIPTION	SHAFT DIMENSIONS TOP O.D. X BASE O.D.					ANCHOR BOLT or ROD DIMENSIONS	
PL-25	25'-0"	3 13/16" X 7 5/16"	25'-0	0 1/2"		1" X 42" X 4"✱	0
PL-28	[illegible]	3 13/16" X 7 3/4"	28'-6	1 1/2"	/2"	1" X 42" X 4"✱	

✱ IF FOUDATION IN UNPAVED AREA CONTRACTOR TO SUPPLY REQUIRED ANCHOR BOLT LENGTH.

GENERAL NOTES

STRUCTURE AND HARDWARE

WELDING

NOTES:

ORDERING NOMENCLATURE

SHAFT LENGTH — ADD LETTER "D" DOUBLE ARM

PL-28 6D

POLE TYPE — LUM. ARM

CITY OF SAN FRANCISCO
"PL" SERIES LIGHTING

CES
10640 Sepulveda Blvd Suite 1 Mission Hills CA 91345
Phone No (818)898-2352 Fax No (818)898-9186
A&E SERVICES

REPLACEMENT DETAILS

DATE

SITE ID:
9CAB007733
SITE NAME: SF90XS701B
ADJACENT TO 1509 SHRADER ST., SAN FRANCISCO, CA 94117

SHEET TITLE
POLE REPLACEMENT DETAILS

SHEET NUMBER
D-2

POLE REPLACEMENT DETAILS

SCALE N.T.S.

SHEET NOTES:

1 GROUND STUD (WELDED TO INTERIOR SURFACE OF SHAFT OPPOSITE DOOR OPENING) STUD SHALL BE 1/4" X 20 (CONTINUOUSLY THREADED) X 3/4" LONG AND BE FURNISHED WITH A TYPE 316 STAINLESS STEEL NUT AND A STAINLESS STEEL SHAKEPROOF WASHER
2 FOR SHAFTS OF 25 FOOT OR LESS IN LEGTH, THE BOLT CIRCLE SHALL BE 10" UNLESS OTHERWISE NOTED FOR SHAFTS MORE THAN 25 FOOT IN LENGHT, THE BOLT CIRCLE DIAMETER SHALL BE 11"
3 PROVIDE NEOPRENE GASKET FOR BRACKET PLATE TO INSURE WATER-TIGHT SEAL

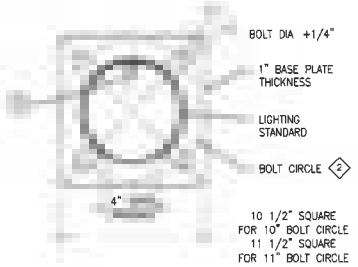

PLAN OF STANDARD ANCHOR BASE

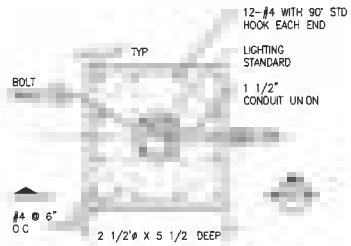

PLAN

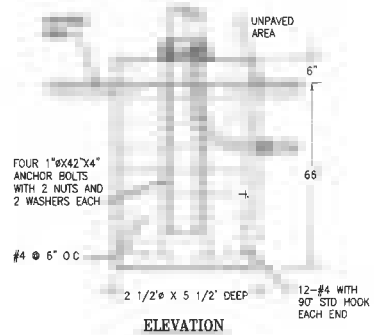

ELEVATION

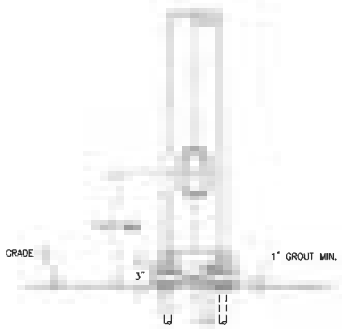

SIDE ELEVATION

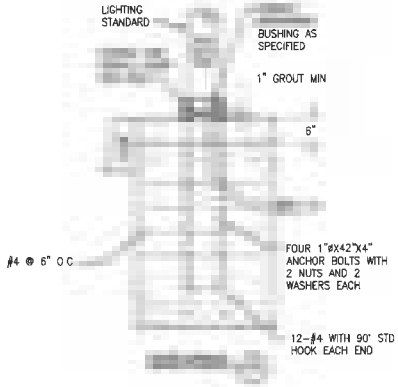

FOUNDATION FOR STREET LIGHT IN SIDEWALK AREA

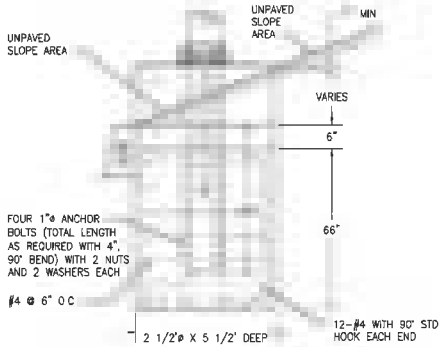

ELEVATION

FOUNDATION FOR STREET LIGHT IN UNPAVED AREA

POLE FOUNDATION DETAILS

SCALE N.T.S. | 1

CeS
10640 Sepulveda Blvd. Suite 1 Mission Hills CA 91345
Phone No. (818)898 2352 Fax No. (818)898-9186
A&E SERVICES

DRAWN BY

DATE

SITE ID:
9CAB007733

NEAREST ADDRESS:
ADJACENT TO 1509 SHRADER ST., SAN FRANCISCO, CA 94117

SHEET TITLE
POLE FOUNDATION DETAILS

SHEET NUMBER
D-3

EXHIBIT C

[Department of Public Health Approval attached behind this page (2 pages).]

Exhibit C

City and County of San Francisco
DEPARTMENT OF PUBLIC HEALTH
ENVIRONMENTAL HEALTH SECTION Stephanie Cushing, MSPH, CHMM, REHS, Director of EH

Mark Farrell, Mayor
Barbara A. Garcia, MPA, Director of Health

April 24, 2018

TO: Gene Chan, Dept. of Public Works, Bureau of Street Use and Mapping

FROM: Arthur Duque, Dept. Of Public Health, Environmental Health Services AD

RE: Mobilitie Pole Mounted Antennas, Alpha Wireless Model AW3477-S1-G & Airspan Model iRelay 460

Location:	DPW Application:	Node#
1509 Shrader St.	18WR-0033	9CAB007733 / SF90xs701B

As requested, I have reviewed the documentation that you and Mobilitie have provided to me regarding the proposed installation of an Alpha Wireless Model AW3477-S1-G & Airspan Model iRelay 460 Antenna, on a utility pole or similar structures located at the above listed location in the City and County of San Francisco.

This review includes February 16, 2018 radio frequency energy report prepared by Hammett and Edison Inc. for this site. The report states that one Alpha Wireless Model AW3477-S1-G omnidirectional cylindrical antenna & Fastback Networks Model IBR 1300 Microwave antenna will be mounted on a utility pole near the location listed above. The Alpha Wireless antenna will be at least 31 feet above the ground level. The Fastback Networks Microwave antenna will be 19 feet above the ground pointing in the 37°T which is northeast on Shrader St. Due to the mounting location, the antenna would not be accessible to the general public.

The maximum effective radiated power from this antenna is estimated to be 154 watts.

The maximum calculated exposure level at the ground level will not exceed 0.012 mW/cm2, which is 1.2% of the FCC public exposure standard. The three dimensional perimeter of the radio frequency (RF) levels equal to the public exposure limit is calculated to extend a maximum of 2.50 feet from the face of the antenna and does not reach any publicly accessible areas. The maximum calculated exposure level at any nearby building is 6.9% of the FCC public exposure limit for the adjacent building 15 feet away.

Based on the information provided in the Hammett and Edison report, I would agree that this Mobilitie Alpha Wireless and Airspan Model iRelay 460 antenna, utility pole installation would be in compliance with the FCC standards and would not produce radio frequency energy exceeding the FCC public exposure limits.

In addition, a noise evaluation was done on the combination of equipment assumed to be installed at this location which was prepared by Hammett & Edison and was dated November 3, 2017. This evaluation found that the equipment will produce noise no louder than 45 decibels 8 feet away from the nearest building façade. As such, the installation of the equipment would be in compliance with the noise standards as outlined in the DPW Code, Article 25.

Approval Conditions:

- Ensure that any equipment associated with the pole installation of this antenna does not produce a noise in excess of 45 dBA as measured at three (3) feet from the nearest residential building façade.

- Ensure that there are no publicly occupied areas within two and a half (2.50) feet from the face of the antenna.

- Once the antenna is installed, Mobilitie must take RF power density measurements with the antenna operating at full power to verify the level reported in the Hammett and Edison report and to ensure that the FCC public exposure level is not exceeded in any publicly accessible area. This measurement must be taken again at the time of the permit renewal.

- Mobilitie should be aware that the general public may have concerns about the antenna and potential RF source near their dwellings. Mobilitie should have in place a procedure for taking RF power density levels in nearby dwellings when requested by the members of the general public.

- In accordance with the San Francisco Public Works Code, Art. 25, Sec. 1527 (a)(2)(C) AT&T is responsible for paying a fee of $210.00 to the San Francisco Department of Public Health for this review.

Please note that this approval and any conditions apply only to the equipment and installation as described. If any changes in the equipment or any increase in the effective radiated power described above are made, a new review by the Department of Public Health must be conducted.

EXHIBIT D

[Planning Department Approval and CEQA Categorical Exemption Determination attached behind this page (12 pages).]

Exhibit D

SAN FRANCISCO
PLANNING DEPARTMENT

1650 Mission St.
Suite 400
San Francisco,
CA 94103-2479

Reception:
415.558.6378

Fax:
415.558.6409

Planning
Information:
415.558.6377

Date:	October 11, 2017
DPW Permit No.:	**18WR-0033**
Project Address:	**1509 Shrader Street**
	Galvanized Steel Replacement Pole owned by SFPUC
Project Sponsor:	James Singleton
	Mobilitie, LLC for Sprint
	2955 Red Hill Ave.
	Costa Mesa, CA 92626
Staff Contact:	Mathew Chandler – (415) 575-9048
	Mathew.Chandler@sfgov.org
Determination:	**Approval with Conditions**

Department of Public Works Code Article 25 and Order No. 183,440 require review by the Planning Department to determine that the Application for a Tier A or Tier B Personal Wireless Service Facility Site Permit satisfies the applicable Tier A or Tier B Compatibility Standard. An Application for a Tier B Personal Wireless Service Facility Site Permit shall satisfy the Tier B Compatibility Standard for a Zoning and/or a Planning Protected Location, and shall not obstruct the view from or the light into any adjacent residential window. A proposed Personal Wireless Service Facility shall be consistent with the public health, safety, convenience and general welfare and will not unreasonably affect, intrude upon or diminish any identified City resource.

DETERMINATION

The Planning Department determines that the proposed Personal Wireless Service Facility **WOULD NOT** significantly detract from the character of the adjacent residential/commercial/mixed-use Districts, Scenic Vistas; or potential and or known historic Buildings; Districts. The Planning Department recommends **APPROVAL WITH CONDITIONS** in conformance with architectural plans dated April 27, 2018 and photo simulations dated February 6, 2018, and associated with DPW Wireless Application No. 18WR-0033.

Findings:

The proposed Tier B Personal Wireless Service Facility is to be located in the public right-of-way in a Planning and Zoning Protected Location, adjacent to 1509 Shrader Street, and on a street with **Excellent Street Views.**

The proposed Personal Wireless Service Facility is, on balance, consistent with Article 25 of the Public Works Code and the Objectives and Policies of the General Plan, as follows:

Article 25 Compliance:

I. The proposed Personal Wireless Service Facility would not significantly impair the views of any of the important buildings, landmarks, open spaces, or parks that were the basis for

the designation of the street as a view street. This site has been designated as having excellent street views per the San Francisco General Plan.

II. The proposed Personal Wireless Service Facility would not significantly detract from any of the defining characteristics of the Residential or Neighborhood Commercial zoning district. This site is located within the RH-2 (Residential-House, Two Family) Zoning District.

The proposed Sprint personal wireless service facility would be situated within the RH-2 (Residential-House, Two Family) district. The RH-2 District is devoted to one-family and two-family houses, with the latter commonly consisting of two large flats, one occupied by the owner and the other available for rental. Structures are finely scaled and usually do not exceed 25 feet in width or 40 feet in height. Building styles are often more varied than in single-family areas, but certain streets and tracts are quite uniform. Considerable ground-level open space is available, and it frequently is private for each unit. The Districts may have easy access to shopping facilities and transit lines. In some cases, Group Housing and institutions are found in these areas, although nonresidential uses tend to be quite limited.

Planning has determined that the proposed Sprint personal wireless service facility is designed in a streamlined manner, as proposed it will be located on a replacement pole in the exact location of an existing light pole which would not significantly detract from any of the defining characteristics of the excellent street view or RH-2 (Residential-House, Two Family) district.

General Plan Compliance:

I. URBAN DESIGN ELEMENT

The Urban Design Element concerns the physical character and order of the city, and the relationship between people and their environment. The Urban Design Element is concerned both with development and with preservation. It is a concerted effort to recognize the positive attributes of the city, to enhance and conserve those attributes and to improve the living environment where it is less than satisfactory. The Plan is a definition of quality, a definition based upon human needs.

OBJECTIVE 1

Emphasis of the characteristic pattern which gives to the City and its neighborhoods an image, a sense of purpose, and a means of orientation.

Policy 1.1

Recognize and protect major views in the city, with particular attention to those of open space and water.

OBJECTIVE 2

Conservation of resources which provide a sense of nature, continuity with the past, and freedom from overcrowding.

Policy 2.9
Review proposals for the giving up of street areas in terms of all the public values that streets afford.

OBJECTIVE 4
Improvement of the neighborhood environment to increase personal safety, comfort, pride and opportunity.

Policy 4.14
Remove and obscure distracting and cluttering elements.

The project has been designed to reduce, to the best extent possible, the blocking or other impairment of pleasing street views, and preserves an important characteristic of the unique setting and quality of the city.

The project has been designed to maintain, to the best extent possible, views from streets which can provide a means for orientation, and preserves the ability for an observer to perceive the City and its districts clearly.

II. TRANSPORTATION ELEMENT
The Transportation Element concerns pedestrian movement in the city as to ensure the city is safe, convenient, and pleasant as pedestrian travel is an important component of the transportation system. The close-knit fabric of San Francisco, in junction with the dramatic hills and sweeping vistas, makes walking an ideal mode for exploring and moving about the city. The sidewalk is a shared space and provides a strong sense of the overall image of the city.

OBJECTIVE 23
Improve the city's pedestrian circulation system to provide for efficient, pleasant, and safe movement.

Policy 23.5
Establish and enforce a set of sidewalk zones that provides guidance for the location of all pedestrian and streetscape elements, maintains sufficient unobstructed width for passage of people, strollers and wheelchairs, consolidates raised elements in distinct areas to activate the pedestrian environment, and allows sufficient access to buildings, vehicles, and streetscape amenities.

The project has been designed to maintain at least four (4) feet unobstructed width for pedestrian passage as outlined in the Pedestrian Network Streets and Design Guidelines of the Transportation Element.

OBJECTIVE 24
Improve the ambience of the pedestrian environment.

Policy 24.4
Preserve pedestrian-oriented building frontages.

The project has been designed as a minimally-visible facility to be attached to an existing light/utility pole extant in the public sidewalk. The facility components are designed as an extension to the pole and equipment boxes, with requirements to be painted or shrouded to match the pole further reducing their visibility and any conflicts with the building frontages within the RH-2 (Residential-House, Two Family) district.

Conditions:

1. Plant and maintain an appropriate street tree.
2. No exposed meter, meter pan or meter pedestal may be used.
3. Antenna, and all equipment (external conduit, radio relay units, blinders used to shroud bracket bolts [if needed], and mounting mechanisms); except signage, if used for screening, shall all be painted to match the pole and repainted as needed.
4. Cabling below radio relay units shall enter the pole with no more than a five-inch gap between bottom of each radio relay unit and the bottom of the corresponding entry hole on the pole. Conduit connection at pole entry points shall utilize the smallest fitting sizes available. Sealing compounds, if utilized, shall be tidy without excess bubbling and painted to match pole.
5. Remove raised equipment signage (including filling in manufacturer logo indentations on radio relay units/cabinets) and equipment decals that may be visible from sidewalk and dwellings, unless required by government regulation.
6. Utilize smallest RF warning signage allowed (4 x 6 inches); and place the warning sticker facing out toward street, at a location as close to antenna as is feasible. Sticker shall face away from street, when not facing a nearby window within 15 feet. Background color of sticker shall match the pole-mounting surface; and logo and text shall be white.
7. Stack equipment enclosures (not including antenna) as close as allowed by applicable regulation and manufacturer equipment standards.
8. Seams and bolts/screws at antenna and shroud assembly area shall be fabricated and installed in a manner so as to reduce their visibility (e.g. flush mounting screws) from sidewalk level.
9. Not utilize any visible flashing indicator lights or similar.
10. Not obstruct the view from, or the light into any adjacent residential window.
11. New below ground enclosure excavations (vault), if utilized, shall not damage or remove granite curbs. No significant gaps shall be created between vault enclosure lid and primary sidewalk material due to installation. Any other existing historic architectural elements within the public right-of-way shall be retained and protected during installation. No carrier logo or carrier name may be placed on the vault lid.
12. Non-essential radio relay unit elements (handle and legs) shall be removed.
13. The installer shall arrange to have Planning Department staff review the initial installation, in order to ensure compliance with the aforementioned conditions (notwithstanding inspections by pole owner and Department of Public Works).

14. Ensure Wi-Fi Access Points and associated wiring, utilized by the City's Department of Technology, are not damaged during installation (if present).
15. Should the installation vary from said conditions, the application shall be resubmitted to the Planning Department for further review and comment.

Sincerely,

Mathew Chandler Digitally signed by Mathew Chandler Date: 2018.05.07 17:35:58 -07'00'

Mathew Chandler
Assistant Planner

Cc: Amanda Higgins, Department of Public Works – Bureau of Street Use and Mapping

SAN FRANCISCO
PLANNING DEPARTMENT

CEQA Categorical Exemption Determination

PROPERTY INFORMATION/PROJECT DESCRIPTION

Project Address		Block/Lot(s)	
Mobilitie/Sprint Wireless Facilities on Existing PUC Poles in NW Quadrant		N/A	
Case No.	Permit No.	Plans Dated	
2017-003445ENV		Approx. February 2017	
☐ Addition/ Alteration	☐ Demolition (requires HRER if over 45 years old)	☑ New Construction	☐ Project Modification (GO TO STEP 7)

Project description for Planning Department approval.

Install wireless service facilities on the top of existing metal SFPUC utility poles in the public right-of-way. Each facility would comprise one 4.5" diameter by 29.5" tall omni directional antenna, and a 35" tall by 15.5" wide radio approximately 13' above the ground on an existing steel streetlight pole. The total structure height would be 30' - 5.5" tall. The purpose of the project is to provide enhanced Sprint service. See attached list of locations.

STEP 1: EXEMPTION CLASS

TO BE COMPLETED BY PROJECT PLANNER

*Note: If neither class applies, an *Environmental Evaluation Application* is required.*	
☐	**Class 1 – Existing Facilities.** Interior and exterior alterations; additions under 10,000 sq. ft.
☐	**Class 3 – New Construction/ Conversion of Small Structures.** Up to three (3) new single-family residences or six (6) dwelling units in one building; commercial/office structures; utility extensions.; .; change of use under 10,000 sq. ft. if principally permitted or with a CU. Change of use under 10,000 sq. ft. if principally permitted or with a CU.
☑	Class 3(d) 3(d) - construction and location of limited numbers of new, small communications facilities.

STEP 2: CEQA IMPACTS

TO BE COMPLETED BY PROJECT PLANNER

If any box is checked below, an *Environmental Evaluation Application* is required.	
☐	**Air Quality:** Would the project add new sensitive receptors (specifically, schools, day care facilities, hospitals, residential dwellings, and senior-care facilities) within an Air Pollution Exposure Zone? Does the project have the potential to emit substantial pollutant concentrations (e.g., backup diesel generators, heavy industry, diesel trucks)? *Exceptions: do not check box if the applicant presents documentation of enrollment in the San Francisco Department of Public Health (DPH) Article 38 program and the project would not have the potential to emit substantial pollutant concentrations. (refer to EP _ArcMap > CEQA Catex Determination Layers > Air Pollutant Exposure Zone)*
☐	**Hazardous Materials:** If the project site is located on the Maher map or is suspected of containing hazardous materials (based on a previous use such as gas station, auto repair, dry cleaners, or heavy manufacturing, or a site with underground storage tanks): Would the project involve 50 cubic yards or more of soil disturbance - or a change of use from industrial to residential? If yes, this box must be checked and the project applicant must submit an Environmental Application with a Phase I Environmental Site Assessment. *Exceptions: do not check box if the applicant presents documentation of enrollment in the San Francisco Department of Public Health (DPH) Maher program, a DPH waiver from the*

	Maher program, or other documentation from Environmental Planning staff that hazardous material effects would be less than significant (refer to EP_ArcMap > Maher layer).
☐	**Transportation:** Does the project create six (6) or more net new parking spaces or residential units? Does the project have the potential to adversely affect transit, pedestrian and/or bicycle safety (hazards) or the adequacy of nearby transit, pedestrian and/or bicycle facilities?
☐	**Archeological Resources:** Would the project result in soil disturbance/modification greater than two (2) feet below grade in an archeological sensitive area or eight (8) feet in a non-archeological sensitive area? *(refer to EP_ArcMap > CEQA Catex Determination Layers > Archeological Sensitive Area)*
☐	**Subdivision/Lot Line Adjustment:** Does the project site involve a subdivision or lot line adjustment on a lot with a slope average of 20% or more? *(refer to EP_ArcMap > CEQA Catex Determination Layers > Topography)*
☐	**Slope = or > 20%:** Does the project involve any of the following: (1) square footage expansion greater than 1,000 sq. ft. outside of the existing building footprint, (2) excavation of 50 cubic yards or more of soil, (3) new construction? *(refer to EP_ArcMap > CEQA Catex Determination Layers > Topography)* **If box is checked, a geotechnical report is required.**
☐	**Seismic: Landslide Zone:** Does the project involve any of the following: (1) square footage expansion greater than 1,000 sq. ft. outside of the existing building footprint, (2) excavation of 50 cubic yards or more of soil, (3) new construction? *(refer to EP_ArcMap > CEQA Catex Determination Layers > Seismic Hazard Zones)* **If box is checked, a geotechnical report is required.**
☐	**Seismic: Liquefaction Zone:** Does the project involve any of the following: (1) square footage expansion greater than 1,000 sq. ft. outside of the existing building footprint, (2) excavation of 50 cubic yards or more of soil, (3) new construction? *(refer to EP_ArcMap > CEQA Catex Determination Layers > Seismic Hazard Zones)* **If box is checked, a geotechnical report will likely be required.**
If no boxes are checked above, GO TO STEP 3. <u>If one or more boxes are checked above, an *Environmental Evaluation Application* is required, unless reviewed by an Environmental Planner.</u>	
☑	**Project can proceed with categorical exemption review. The project does not trigger any of the CEQA impacts listed above.**
Comments and Planner Signature (*optional*): Jean Poling Digitally signed by Jean Poling Date: 2017.03.22 15:36:56 -07'00'	

STEP 3: PROPERTY STATUS – HISTORIC RESOURCE
TO BE COMPLETED BY PROJECT PLANNER

PROPERTY IS ONE OF THE FOLLOWING: *(refer to Parcel Information Map)*	
☑	**Category A:** Known Historical Resource. **GO TO STEP 5.**
☑	**Category B:** Potential Historical Resource (over 45 years of age). **GO TO STEP 4.**
☑	**Category C:** Not a Historical Resource or Not Age Eligible (under 45 years of age). **GO TO STEP 6.**

STEP 4: PROPOSED WORK CHECKLIST
TO BE COMPLETED BY PROJECT PLANNER

Check all that apply to the project.	
☐	1. **Change of use and new construction.** Tenant improvements not included.
☐	2. **Regular maintenance or repair** to correct or repair deterioration, decay, or damage to building.
☐	3. **Window replacement** that meets the Department's *Window Replacement Standards*. Does not include storefront window alterations.
☐	4. **Garage work.** A new opening that meets the *Guidelines for Adding Garages and Curb Cuts*, and/or replacement of a garage door in an existing opening that meets the Residential Design Guidelines.
☐	5. **Deck, terrace construction, or fences** not visible from any immediately adjacent public right-of-way.
☐	6. **Mechanical equipment installation** that is not visible from any immediately adjacent public right-of-way.
☐	7. **Dormer installation** that meets the requirements for exemption from public notification under *Zoning Administrator Bulletin No. 3: Dormer Windows*.
☐	8. **Addition(s)** that are not visible from any immediately adjacent public right-of-way for 150 feet in each direction; does not extend vertically beyond the floor level of the top story of the structure or is only a single story in height; does not have a footprint that is more than 50% larger than that of the original building; and does not cause the removal of architectural significant roofing features.
Note: Project Planner must check box below before proceeding.	
☑	Project is not listed. **GO TO STEP 5.**
☐	Project **does not conform** to the scopes of work. **GO TO STEP 5.**
☐	Project involves **four or more** work descriptions. **GO TO STEP 5.**
☐	Project involves **less than four** work descriptions. **GO TO STEP 6.**

STEP 5: CEQA IMPACTS – ADVANCED HISTORICAL REVIEW
TO BE COMPLETED BY PRESERVATION PLANNER

Check all that apply to the project.	
☐	1. Project involves a **known historical resource (CEQA Category A)** as determined by Step 3 and conforms entirely to proposed work checklist in Step 4.
☐	2. **Interior alterations to publicly accessible spaces.**
☐	3. **Window replacement** of original/historic windows that are not "in-kind" but are consistent with existing historic character.
☐	4. **Façade/storefront alterations** that do not remove, alter, or obscure character-defining features.
☐	5. **Raising the building** in a manner that does not remove, alter, or obscure character-defining features.
☐	6. **Restoration** based upon documented evidence of a building's historic condition, such as historic photographs, plans, physical evidence, or similar buildings.
☐	7. **Addition(s)**, including mechanical equipment that are minimally visible from a public right-of-way and meet the *Secretary of the Interior's Standards for Rehabilitation*.
☑	8. **Other work consistent** with the *Secretary of the Interior Standards for the Treatment of Historic Properties* (*specify or add comments*): The proposed work is entirely in the public right-of-way and will not directly impact any idenfied or potential historic properties.

☑	9. **Other work** that would not materially impair a historic district (specify or add comments): The proposed work is entirely in the public right-of-way and will not directly impact any identified or potential historic resources. *(Requires approval by Senior Preservation Planner/Preservation Coordinator)*
☐	10. **Reclassification of property status.** *(Requires approval by Senior Preservation Planner/Preservation Coordinator)* ☐ Reclassify to Category A ☐ Reclassify to Category C a. Per HRER dated: *(attach HRER)* b. Other *(specify)*:

Note: If ANY box in STEP 5 above is checked, a Preservation Planner MUST check one box below.

☐	**Further environmental review required.** Based on the information provided, the project requires an *Environmental Evaluation Application* to be submitted. **GO TO STEP 6.**
☑	**Project can proceed with categorical exemption review.** The project has been reviewed by the Preservation Planner and can proceed with categorical exemption review. **GO TO STEP 6.**

Comments (*optional*):

Work will be undertaken within the public right-of-way on existing poles and will not affect poles that are decorative or historic in nature. Equipment is designed to be slim in profile and to avoid large bundles of visible cabling, equipment decals, lighting, or mounting systems so that adjacent buildings are not materially or visually impaired. Work will not physically alter any historic features or materials that characterize known or potential historic resources where these installations occur.

Preservation Planner Signature:

STEP 6: CATEGORICAL EXEMPTION DETERMINATION

TO BE COMPLETED BY PROJECT PLANNER

☐	**Further environmental review required.** Proposed project does not meet scopes of work in either *(check all that apply)*: ☐ Step 2 – CEQA Impacts ☐ Step 5 – Advanced Historical Review **STOP! Must file an *Environmental Evaluation Application.***
☑	**No further environmental review is required. The project is categorically exempt under CEQA.**

Planner Name: Stephanie Skangos	**Signature:** Stephanie Skangos Digitally signed by Stephanie Skangos DN: cn=Stephanie Skangos, o=City and County of San Francisco, ou=Planning Department, email=Stephanie.Skangos@sfgov.org, c=US Date: 2017.06.01 14:54:03 -07'00'
Project Approval Action: DPW Final Approvals If Discretionary Review before the Planning Commission is requested, the Discretionary Review hearing is the Approval Action for the project.	

Once signed or stamped and dated, this document constitutes a categorical exemption pursuant to CEQA Guidelines and Chapter 31 of the Administrative Code.

In accordance with Chapter 31 of the San Francisco Administrative Code, an appeal of an exemption determination can only be filed within 30 days of the project receiving the first approval action.

STEP 7: MODIFICATION OF A CEQA EXEMPT PROJECT

TO BE COMPLETED BY PROJECT PLANNER

In accordance with Chapter 31 of the San Francisco Administrative Code, when a California Environmental Quality Act (CEQA) exempt project changes after the Approval Action and requires a subsequent approval, the Environmental Review Officer (or his or her designee) must determine whether the proposed change constitutes a substantial modification of that project. This checklist shall be used to determine whether the proposed changes to the approved project would constitute a "substantial modification" and, therefore, be subject to additional environmental review pursuant to CEQA.

PROPERTY INFORMATION/PROJECT DESCRIPTION

Project Address (If different than front page)		Block/Lot(s) (If different than front page)
Case No.	Previous Building Permit No.	New Building Permit No.
Plans Dated	Previous Approval Action	New Approval Action
Modified Project Description:		

DETERMINATION IF PROJECT CONSTITUTES SUBSTANTIAL MODIFICATION

Compared to the approved project, would the modified project:	
☐	Result in expansion of the building envelope, as defined in the Planning Code;
☐	Result in the change of use that would require public notice under Planning Code Sections 311 or 312;
☐	Result in demolition as defined under Planning Code Section 317 or 19005(f)?
☐	Is any information being presented that was not known and could not have been known at the time of the original determination, that shows the originally approved project may no longer qualify for the exemption?
If at least one of the above boxes is checked, further environmental review is required.	CATEX FORM

DETERMINATION OF NO SUBSTANTIAL MODIFICATION

☐	The proposed modification would not result in any of the above changes.
If this box is checked, the proposed modifications are categorically exempt under CEQA, in accordance with prior project approval and no additional environmental review is required. This determination shall be posted on the Planning Department website and office and mailed to the applicant, City approving entities, and anyone requesting written notice.	
Planner Name:	**Signature or Stamp:**

Locations for [illegible] NW [illegible]

[illegible]	[illegible]	[illegible]	[illegible]	[illegible]
9CAB007733	SF90XS701B	SFPUC	Adjacent to 1507 Shrader St., San Francisco, CA 94117	1289002
9CAB007773	SF90XS742A	SFPUC	Adjacent to 450 Stanyan St., San Francisco, CA 94117	1191041
9CAB007776	SF90XS745A	SFPUC	Adjacent to 1576 Haight St, San Francisco, CA 94117	1231018
9CAB007777	SF90XS746A	SFPUC	Adjacent to 1285 Waller St., San Francisco, CA 94117	1256044
9CAB007818	SF90XS789D	SFPUC	Adjacent to 600 15th Ave., Sasn Francisco, CA 94118	16330034
9CAB007825	SF90XS798A	SFPUC	Adjacent to 501 Clement St. San Francisco, CA 94118	1438001
9CAB007826	SF90XS799B	SFPUC	Adjacent to 699 Arguello Blvd., San Francisco, CA 94118	1544052
9CAB007830	SF90XS803D	SFPUC	Adjacent to 2944 Turk Blvd, San Francisco, CA 94118	1137012A
9CAB013890	SF90XS2V1B	SFPUC	Adjacent 29 Masonic Ave., San Francisco, CA 94118	1092003
9CAB007916	SF90XS897F	SFPUC	Adjacent to 2301 Chestnut St., San Francisco, CA 94123	0-936001
9CAB007925	SF90XS907B	SFPUC	Adjacent to 2200 Union St., San Francisco, CA 94123	0-534010
9CAB007951	SF90XS935D	SFPUC	Adjacent to 2519 Chestnut St., San Francisco, CA 94123	0-934030
9CAB007954	SF90XS938B	SFPUC	Adjacent to 2295 Francisco St., San Francisco, CA 94123	929030
9CAB007958	SF90XS942D	SFPUC	Adjacent to 3201 Octavia St, San Francisco, California 94123	482007
9CAB013883	SF90XS2U3A	SFPUC	Adjacent to 1712 Union St, San Francisco, CA 94123	0-529002B
9CAB013886	SF90XS2U6B	SFPUC	Adjacent to 295 Marina Blvd., San Francisco, CA 94123	0436C015A
9CAB007682	SF90XS648D	SFPUC	Adjacent to 3945 Balboa St , San Francisco, CA 94121	1604024
9CAB007867	SF90XS842H	SFPUC	Adjacent to 2224 Lake St. San Francisco, CA 94121	1336017
9CAB007891	SF90XS868C	SFPUC	Adjacent to 2898 Clay St., San Francisco, CA 94115	1002018
9CAB007892	SF90XS869C	SFPUC	Adjacent to 1924 Broderick St., San Francisco, CA 94115	1025025
9CAB007899	SF90XS877D	SFPUC	Adjacent to 2333 Buchanan St., San Francisco, CA 94115	0-628014
9CAB007877	SF90XS853C	SFPUC	Adjacent to 3810 Sacramento St, San Francisco, CA 94118	1013006
9CAB007878	SF90XS854B	SFPUC	Adjacent to 3468 California St., San Francisco, CA 94118	1019/044-064
9CAB007882	SF90XS858B	SFPUC	Adjacent to 3200 California St, San Francisco, CA 94118	1021038
9CAB007887	SF90XS864C	SFPUC	Adjacent to 3401 Washington St., San Francisco, CA 94118	0-996030
9CAB007888	SF90XS865B	SFPUC	Adjacent to 3344 Sacramento St., San Francisco, CA 94118	1008008
9CAB013981	SF90XS3F1A	SFPUC	Adjacent to 200 Locust St., San Francisco, CA 94118	995014
9CAB013526	SF90XS1I4A	SFPUC	Adjacent to 450 Masonic Ave. San Francisco, CA 94118	1160019
9CAB013891	SF90XS2V2A	SFPUC	Adjacent to 1563 Lyon St., San Francisco, CA 94115	1055001
9CAB007726	SF90XS694I	SFPUC	Adjacent to 450A Irving St. San Francisco, CA 94122	1754013
9CAB007728	SF90XS696F	SFPUC	Adjacent to 401 Parnassus Ave., San Francisco, CA 94143	2634A005
9CAB007734	SF90XS702A	SFPUC	Adjacent to 400 Parnassus Ave., San Francisco, CA 94122	1756001
9CAB013663	SF90XS1X1C	SFPUC	Adjacent to 798 Eddy St, San Francisco, CA 94109	0-739005
9CAB007790	SF90XS760B	SFPUC	Adjacent to 607 Haight St, San Francisco, CA 94117	861035
9CAB007852	SF90XS826B	SFPUC	Adjacent to 1717 Eddy St, San Francisco, CA 94115	0-752001
9CAB007853	SF90XS827A	SFPUC	Adjacent to 1502 Fillmore St., San Francisco, CA 94115	0708/021-179
9CAB007856	SF90XS831D	SFPUC	Adjacent to 1335 Eddy St, San Francisco, CA 94115	0-748032
9CAB007884	SF90XS861E	SFPUC	Adjacent to 2320 Sutter St, San Francisco, CA 94115	1051034
9CAB007885	SF90XS862B	SFPUC	Adjacent to 2520 Bush St., San Francisco, CA 94115	1050010
9CAB007893	SF90XS871A	SFPUC	Adjacent to 2390 Bush St. San Francisco, California, 94115	658002
9CAB007895	SF90XS873D	SFPUC	Adjacent to 1643 Sutter St. San Francisco, CA 94109	687036
9CAB007900	SF90XS878B	SFPUC	Adjacent to 1935 California St., San Francisco, CA 94109	0649/031-032
9CAB007902	SF90XS880A	SFPUC	Adjacent to 1033 Polk St, San Francisco, CA 94109	0-694003
9CAB007793	SF90XS763A	SFPUC	Adjacent to 439 Haight St., San Francisco, CA 94117	859029

Site List

	Site IDs	Latitude	Longitude	Address	Structure Height (ft)	Installation
1	9CAB007759-A SF90XS728A	37.765812	-122.408667	2300 16th St, San Francisco, CA 94103, USA	27 $^{6}/_{12}$	Small Cell, Attach to Steel Light Pole
2	9CAB007753-A SF90XS722A	37.76109	-122.411156	650E Florida St, San Francisco, CA 94110, USA	30 $^{6}/_{12}$	Small Cell, Attach to Aluminum Light Pole
3	9CAB007749-B SF90XS718B	37.763542	-122.41707	3191 17th St, San Francisco, CA 94110, USA	31 $^{6}/_{12}$	Small Cell, Attach to Steel Light Pole
4	9CAB007734-A SF90XS702A	37.763456	-122.458244	444-500 Parnassus Ave, San Francisco, CA 94122, USA	30 $^{6}/_{12}$	Small Cell, Attach to Metal Light Pole
5	9CAB007733-B SF90XS701B	37.761245	-122.450591	1509 Shrader St, San Francisco, CA 94117, USA	30 $^{8}/_{12}$	Small Cell, Attach to Metal Light Pole

EXHIBIT E

[Final Permit attached behind this page (8 pages).]

Exhibit E

City and County of San Francisco
San Francisco Public Works · Bureau of Street Use and Mapping
1155 Market Street, 3rd Floor · San Francisco, CA 94103
sfpublicworks.org · tel 415-554-5810 · fax 415-554-6161

8WR-0033 ***Wireless Box Permit***

Address : 1509 SHRADER ST **Cost: $1,979.00** **Block:1289 Lot: 003 Zip: 94117**

Mobilitie, LLC SF90XS701B

Name: Mobilitie, LLC

MANDATORY COORDINATION WITH CONFLICTING PERMITS IS REQUIRED. PERMIT HOLDER SHALL NOT COMMENCE WORK WITHOUT FIRST PROPERLY COORDINATING WITH EXISTING PERMIT HOLDERS AS NOTED ON THE EXCEPTION PAGE(S) OF THIS PERMIT. IF THIS PERMIT CONFLICTS WITH A CITY PROJECT OR OTHER APPROVED PERMIT, THE PERMIT HOLDER OF THIS PERMIT SHALL BE RESPONSIBLE FOR THE PROPER COORDINATION AND EVALUATION OF THE SITE PRIOR TO COMMENCING WORK.

Contact247	Refer to Agent
Permit Comments	
Service Address	
Wireless Machine Type	
Wireless Tier	TierB
Permit Pole Location	1289003/Shrader_151
Permit Wireless Antenna	1
Permit Wireless AntMakeModel	Alpha Wireless - AW3477-S1-G
Permit Planning Location	
Permit Tier Comments	
Permit Wireless DPH	Applicant is using equipment for the first time. Attached is an original verified statement from a registered engineer that: (i) potential human exposure to radio frequency emissions from the proposed Personal Wireless Service Facility is within the FCC guidelines; and (ii) noise at any time of the day or night from the proposed Personal Wireless Service Facility is not greater than forty-five (45) dBA as measured at a distance three (3) feet from any residential building facade.
Permit Planning Approval	The proposed Personal Wireless Service Facility is in Zoning Protected Location.
Permit Utility Conditions	Applicant has a valid Utility Conditions Permit
Permit Tier3 Std	
Permit Tier3 Std1	
Permit Tier3 Std2	
Permit Wireless Documents	
Permit_Auto_StartDate_Ind	Y

The undersigned Permittee hereby agrees to comply with all requirements and conditions noted on this permit

Approved Date : 09/19/2018

Applicant/Permitee Date

Printed : 9/19/2018 4:19:43 PM Plan Checker Leoncio Palacios

itions

San Francisco Public Works Conditions:
1. This recommendation is based on no variation from the depicted drawings and/or photo simulation; if a variation is different a re-submittal is required. Should the installation vary from said conditions, it should be resubmitted to Department(s) for further review and comment
2. New Poles: no new poles shall be erected or placed in underground districts.
3. Down Guys: Follow all excavation codes to obtain the necessary permits for placement of down guys. Down guy shall avoid crossing conflicting areas but not limited to driveways, curb ramps.
4. Comply with ADA code requirements for Federal, State, local laws. Make sure path of minimum required clear width for accessible path of travel is four feet.
5. At the conclusion of the work, provide a set of as built photos of the installation to the Bureau Street Use & Mapping Permit Office.
6. Maintain a valid certification of insurance annually and forward a copy to the Bureau Street Use & Mapping Permit Office.

San Francisco Department of Public Health Conditions:
1. Ensure that any equipment associated with the pole installation of this antenna does not produce a noise in excess of 45 dBA as measured at three (3) feet from the nearest residential building façade.
2. Ensure that there are no publicly occupied areas within two and a half (2.50) feet from the face of the antenna.
3. Once the antenna is installed, Mobilitie must take RF power density measurements with the antenna operating at full power to verify the level reported in the Hammett and Edison report and to ensure that the FCC public exposure level is not exceeded in any publicly accessible area. This measurement must be taken again at the time of the permit renewal.
4. Mobilitie should be aware that the general public may have concerns about the antenna and potential RF source near their dwellings. Mobilitie should have in place a procedure for taking RF power density levels in nearby dwellings when requested by the members of the general public.
5. In accordance with the San Francisco Public Works Code, Art. 25, Sec. 1527 (a)(2)(C) AT&T is responsible for paying a fee of $210.00 to the San Francisco Department of Public Health for this review.

Please note that this approval and any conditions apply only to the equipment and installation as described. If any changes in the equipment or any increase in the effective radiated power described above are made, a new review by the Department of Public Health must be conducted.

San Francisco Planning Department Conditions:
1. Plant and maintain an appropriate street tree.
2. No exposed meter, meter pan or meter pedestal may be used.
3. Antenna, and all equipment (external conduit, radio relay units, blinders used to shroud bracket bolts [if needed], and mounting mechanisms); except signage, if used for screening, shall all be painted to match the pole and repainted as needed.
4. Cabling below radio relay units shall enter the pole with no more than a five-inch gap between bottom of each radio relay unit and the bottom of the corresponding entry hole on the pole. Conduit connection at pole entry points shall utilize the smallest fitting sizes available. Sealing compounds, if utilized, shall be tidy without excess bubbling and painted to match pole.
5. Remove raised equipment signage (including filling in manufacturer logo indentations on radio relay units/cabinets) and equipment decals that may be visible from sidewalk and dwellings, unless required by government regulation.
6. Utilize smallest RF warning signage allowed (4 x 6 inches); and place the warning sticker facing out toward street, at a location as close to antenna as is feasible. Sticker shall face away from street, when not facing a nearby window within 15 feet. Background color of sticker shall match the pole-mounting surface; and logo and text shall be white.
7. Stack equipment enclosures (not including antenna) as close as allowed by applicable regulation and manufacturer equipment standards.
8. Seams and bolts/screws at antenna and shroud assembly area shall be fabricated and installed in a manner so as to reduce their visibility (e.g. flush mounting screws) from sidewalk level.
9. Not utilize any visible flashing indicator lights or similar.
10. Not obstruct the view from, or the light into any adjacent residential window.
11. New below ground enclosure excavations (vault), if utilized, shall not damage or remove granite curbs. No significant gaps shall be created between vault enclosure lid and primary sidewalk material due to installation. Any other existing historic architectural elements within the public right-of-way shall be retained and protected during installation. No carrier logo or carrier name may be placed on the vault lid.
12. Non-essential radio relay unit elements (handle and legs) shall be removed.
13. The installer shall arrange to have Planning Department staff review the initial installation, in order to ensure compliance with the aforementioned conditions (notwithstanding inspections by pole owner and Department of Public Works).
14. Ensure Wi-Fi Access Points and associated wiring, utilized by the City's Department of Technology, are not damaged during installation (if present).
15. Should the installation vary from said conditions, the application shall be resubmitted to the Planning Department for further review and comment.

Permit Addresses

18WR-0033

*RW = RockWheel, SMC = Surface Mounted Cabinets, S/W = Sidewalk Work, DB = Directional Boring,
BP= Reinforced Concrete Bus Pad, UB = Reinforced Concrete for Utility Pull Boxes and Curb Ramps
Green background: Staging Only

Number of blocks: 1 Total repair size:0 sqft Total Streetspace:0 Total Sidewalk: sqft

ID	Street Name	From St	To St	Side	*Other	Asphalt	Concrete	Street Space Feet	Sidewalk Feet
1	SHRADER ST	17TH ST	CARMEL ST	West	[illegible] UB: False	0	[illegible]	0	
	Total					[illegible]	[illegible]	[illegible]	

Exceptions

18WR-0033

Name	From St	To St	Message	Job	Contact	Dates
	17TH ST	CARMEL ST -	Conflict with existing Street Use Permit.	13MSE-0351	Refer to Agent - Refer to Agent	

No Diagram submitted

EXHIBIT F

[Declaration for Mailing Notice of Tentative Approval attached behind this page (25 pages).]

Exhibit F

STATE OF CALIFORNIA)

COUNTY OF SAN FRANCISCO)

DECLARATION OF MAILING RE: NOTICE OF TENTATIVE APPROVAL OF APPLICATION FOR A PERSONAL WIRELESS SERVICE FACILITY SITE PERMIT

Luis Martinez do hereby declare as follows:

1. I am a_Network Real Estate Specialist_ at Mobilitie LLC. I am over 18 years of age and I am a resident of Riverside County, State of California.

2. On May 30, 2018 I caused to be mailed and/or distributed a copy of "NOTICE OF TENTATIVE APPROVAL OF APPLICATION FOR A PERSONAL WIRELESS SERVICE FACILITY SITE PERMIT" to the following location(s) within the 150 foot boundaries of the proposed site and also including neighborhood association within 300 foot boundaries of site and the list is compliant with Public Works Code 1512 (b)(1):

   a. See Attached Map 1509 Shrader St
   See Attached Mailing List
   See Attached Notice
   See Attached Envelope

3. The attached list was prepared using the latest available data per the County Assessor's Office by Radius Services.

I declare under penalty of perjury under the laws of the State of California that the foregoing is true and correct.

Executed 5/30/2018 at Orange County, California.

By: _____

Luis Martinez

R A D I U S services

1221 HARRISON STREET #18
SAN FRANCISCO, CA 94103

P: 415-391-4775
F: 415-391-4777
radiusservices@sfradius.com

AFFIDAVIT OF PREPARATION OF RADIUS NOTIFICATION MAP, MAILING LIST, & DELIVERY MATERIALS FOR PUBLIC NOTIFICATION

RADIUS SERVICES hereby declares as follows:

1. We have prepared the NOTIFICATION MAP, MAILING LIST, and DELIVERY MATERIALS for the purpose of public notification in accordance with the requirements and instructions stipulated by San Francisco City Planning Department Planning Code / San Francisco Department of Building Inspection / San Francisco Public Works Code:

- [ ] Section 311 (Residential)
- [ ] Section 312 (Commercial)
- [ ] Variance
- [ ] Environmental Evaluation
- [ ] Conditional Use Permit
- [ ] Conditional Use Permit for Wireless Antenna Installation
- [x] Other 300' Owners/150'Occupants for Light Pole
- [ ] Mobile Food Facility (MFF)
  Truck: 75' minimum radius measured from the outer boundaries of the assumed curbside and all properties across the street that directly fronts, in whole or in part.
- [ ] Mobile Food Facility (MFF)
  Push Cart: 300' minimum radius of the street address(s) in front of which the Pushcart will be located.
- [ ] Minor Sidewalk Encroachment (MSE)
  150' radius **fronting** the subject property.
- [ ] Major Sidewalk Encroachment (ME)
  300' complete radius.
- [ ] Section 106.3.2.3 (Demolition)

2. We understand that we are responsible for the accuracy of this information, and that erroneous information may require remailing or lead to suspension or revocation of the permit.

3. We have prepared these materials in good faith and to the best of our ability.

We declare under penalty of perjury under the laws of the State of California and the City and County of San Francisco that the foregoing is true and correct.

EXECUTED IN SAN FRANCISCO, ON THIS DAY, 2/19/2018.

RADIUS SERVICES
Professional Service Provider

Kevin Chuck
Radius Services

1289002N
Radius Services Job Number

1509 Shrader St
Project Address

1289/3
Block / Lot

BLOCK	LOT	OWNER	OADDR	CITY	STATE	ZIP
0001	001	RADIUS SERVICES NO. 1289002N	1507 SHRADER ST	MOBILITIE	18	0219
0001	002					
0001	003	RADIUS SERVICES	1221 HARRISON ST #18	SAN FRANCISCO	CA	94103
0001	004	MOBILITIE	2955 RED HILL AVE, #200	COSTA MESA	CA	92626
0001	005					
1287	016A	MONICA PRESSLEY	1450 SHRADER ST	SAN FRANCISCO	CA	94117-4234
1288	009	LOIS LOW	149 MOLIMO DR	SAN FRANCISCO	CA	94127-1821
1288	009	OCCUPANT	1461 SHRADER ST #1	SAN FRANCISCO	CA	94117-4258
1288	009	OCCUPANT	1461 SHRADER ST #2	SAN FRANCISCO	CA	94117-4258
1288	009	OCCUPANT	1461 SHRADER ST #3	SAN FRANCISCO	CA	94117-4258
1288	009	OCCUPANT	1461 SHRADER ST #4	SAN FRANCISCO	CA	94117-4258
1288	009	OCCUPANT	1461 SHRADER ST #5	SAN FRANCISCO	CA	94117-4258
1288	009	OCCUPANT	1461A SHRADER ST	SAN FRANCISCO	CA	94117-4258
1289	002	WILLIAM SHEPPARD	1505 SHRADER ST	SAN FRANCISCO	CA	94117-4235
1289	002	OCCUPANT	1507 SHRADER ST	SAN FRANCISCO	CA	94117-4235
1289	003	BRIAN SEDAR	1509 SHRADER ST	SAN FRANCISCO	CA	94117-4235
1289	004	WILLIAMSON SHEN	1515 SHRADER ST	SAN FRANCISCO	CA	94117-4235
1289	005	SWANSON	1517 SHRADER ST	SAN FRANCISCO	CA	94117-4235
1289	006	LONG-MINICK	1521 SHRADER ST	SAN FRANCISCO	CA	94117-4235
1289	007	ANDREW COLEMAN	1525 SHRADER ST	SAN FRANCISCO	CA	94117-4235
1289	008	FERRIGNO	388 2ND AV	SAN FRANCISCO	CA	94118-2414
1289	008	OCCUPANT	1529 SHRADER ST	SAN FRANCISCO	CA	94117-4235
1289	009	B & J LAWSON	PO BOX 1026	CLEARLAKE OAKS	CA	95423-1026
1289	009	OCCUPANT	1531 SHRADER ST	SAN FRANCISCO	CA	94117-4235
1289	009	OCCUPANT	1533 SHRADER ST	SAN FRANCISCO	CA	94117-4235
1289	062	KARL LEICHUM	3917 19TH ST	SAN FRANCISCO	CA	94114-2521
1289	062	OCCUPANT	4931 17TH ST	SAN FRANCISCO	CA	94117-4259
1289	062	OCCUPANT	4931A 17TH ST	SAN FRANCISCO	CA	94117-4259
1289	062	OCCUPANT	4933 17TH ST	SAN FRANCISCO	CA	94117-4259
1289	062	OCCUPANT	4935 17TH ST	SAN FRANCISCO	CA	94117-4259
1289	062	OCCUPANT	4937 17TH ST	SAN FRANCISCO	CA	94117-4259
1289	074	DAVID NICHOLS	1596 CHURCH ST	SAN FRANCISCO	CA	94131-2048
1289	074	OCCUPANT	1537 SHRADER ST	SAN FRANCISCO	CA	94117-4235
1289	075	MATTHEW RASMUSSEN	1539 SHRADER ST	SAN FRANCISCO	CA	94117-4235
1289	078	BRIGITTE BOGERT	4901 17TH ST	SAN FRANCISCO	CA	94117-4206
1289	079	SEAN FOLEY	4903 17TH ST	SAN FRANCISCO	CA	94117-4206
1289	080	AMY ELIOT	4925 17TH ST	SAN FRANCISCO	CA	94117-4206
1289	081	JULIA ROWE	3555 CLAY ST	SAN FRANCISCO	CA	94118-1838
1289	081	OCCUPANT	4927 17TH ST	SAN FRANCISCO	CA	94117-4206
1289	082	LUCIEL LEIS	4909 17TH ST	SAN FRANCISCO	CA	94117-4206
1289	083	REGAN TESKEY	4911 17TH ST	SAN FRANCISCO	CA	94117-4206
1290	016	J & A MERICKEL	1536 SHRADER ST	SAN FRANCISCO	CA	94117
1290	017	JEAN GALLO	1534 SHRADER ST	SAN FRANCISCO	CA	94117-4236
1290	017	OCCUPANT	1534A SHRADER ST	SAN FRANCISCO	CA	94117-4236
1290	017	OCCUPANT	1534B SHRADER ST	SAN FRANCISCO	CA	94117-4236
1290	018	SANISH MONDKAR	1526 SHRADER ST	SAN FRANCISCO	CA	94117-4236
1290	019	SARAH RIPPY	1520 SHRADER ST	SAN FRANCISCO	CA	94117
1290	020	E & J MCDONALD	1516 SHRADER ST	SAN FRANCISCO	CA	94117-4236
1290	021	BRETT REYNOLDS	268 BUSH ST #2707	SAN FRANCISCO	CA	94104-3503
1290	021	OCCUPANT	1510 SHRADER ST	SAN FRANCISCO	CA	94117-4236
1290	021	OCCUPANT	1512 SHRADER ST	SAN FRANCISCO	CA	94117-4236
1290	022	M & Z FLADELAND	1504 SHRADER ST	SAN FRANCISCO	CA	94117-4236
1290	022	OCCUPANT	1504A SHRADER ST	SAN FRANCISCO	CA	94117-4236
1290	022	OCCUPANT	1506 SHRADER ST	SAN FRANCISCO	CA	94117-4236
1290	023	ERIN STEPHENS	2511 SNAPDRAGON ST	BOZEMAN	MT	59718-7509
1290	023	OCCUPANT	4875 17TH ST	SAN FRANCISCO	CA	94117-4330
1290	023	OCCUPANT	4877 17TH ST	SAN FRANCISCO	CA	94117-4330
1290	024	JAMES MATHEWS	4855 17TH ST	SAN FRANCISCO	CA	94117-4330
1290	024	OCCUPANT	4857 17TH ST	SAN FRANCISCO	CA	94117-4330
1290	030	K & L FARRELL	160 CARMEL ST #101	SAN FRANCISCO	CA	94117-4356
1290	031	LIN	2716 MCKEON WAY	SANTA ROSA	CA	95404-1669
1290	031	OCCUPANT	160 CARMEL ST #102	SAN FRANCISCO	CA	94117-4356
1290	032	KENNETH COHEN	160 CARMEL ST #202	SAN FRANCISCO	CA	94117-4356
1290	033	WILLIAM MEYER	160 CARMEL ST #201	SAN FRANCISCO	CA	94117-4356
9999	999					

SOUTH OF MARKET

Angelica Cabande
South of Market Community Action Network (SOMCAN)
1110 Howard Street
San Francisco, CA 94103

Antonio Diaz
People Organizing to Demand Environmental and Economic Rights (PODER)
474 Valencia Street #125
San Francisco, CA 94103

Carolyn Diamond
Market Street Association
870 Market Street, Suite 456
San Francisco, CA 94102

Corinne Woods
Mission Creek Harbor Association
300 Channel Street, Box 10
San Francisco, CA 94158

Eric Lopez
SoMaBend Nieghborhood
P.O.Box 410805
San Francisco, CA 94141

Ethan Hough
One Ecker Owners Association
16 Jessie Street Unit 301
San Francisco, CA 94105

Gerald Wolf
Hallam Street Homeowners Association
1 Brush Place
San Francisco, CA 94103

Ian Lewis
HERE Local 2
209 Golden Gate Avenue
San Francisco, CA 94102

Jane Kim
Board of Supervisors
1 Dr. Carlton B Goodlett Place, Room #244
San Francisco, CA 94102-4689

Janet Carpinelli
Dogpatch Neighborhood Association
934 Minnesota Street
San Francisco, CA 94107

Jason Henderson
Market/Octavia Community Advisory Comm.
300 Buchanan Street, Apt. 503
San Francisco, CA 94102

Jaime Whitaker
SOMA Leadership Council
201 Harrison Street Apt. 229
San Francisco, CA 94105

Katy Liddell
South Beach/Rincon/ Mission Bay Neighborhood Association
403 Main Street #813
San Francisco, CA 94105

Kaye Griffin
LMNOP Neighbors
1047 Minna Street
San Francisco, CA 94103

Keith Goldstein
Potrero-Dogpatch Merchants Association
800 Kansas Street
San Francisco, CA 94107

Laura Magnani
American Friends Service Committee
65 Ninth Street
San Francisco, CA 94103

Marvis Phillips
Alliance for a Better District 6
230 Eddy Street #1206
San Francisco, CA 94102-6526

Patsy Tito
Samoan Development Centre
2055 Sunnydale Avenue #100
San Francisco, CA 94134-2611

Reed Bement
Rincon Hill Residents Assocation
75 Folsom Street #1800
San Francisco, CA 94105

Rodney Minott
Potrero Hill Neighbors/Save the Hill
1206 Mariposa Street
San Francisco, CA 94107

Sonja Kos
TODCO Impact Group
230 Fourth Street
San Francisco, CA 94103

Ted Olsson
Market/Octavia Community Advisory Comm.
30 Sharon Street
San Francsico, CA 94114-1709

Nadia Sesay
Office of Community Investment and Infrastructure, City and County of San Francisco
1 South Van Ness Avenue, 5th Floor
San Francisco, CA 94103

J.R. Eppler
Potrero Boosters Neigborhood Association
1459 - 18th Street, Suite 133
San Francisco, CA 94107

York Loo
York Realty
243A Shipley Street
San Francisco, CA 94107-1010

Dyan Ruiz
People Power Media
366 10th Avenue
San Francisco, CA 94118

Michelle De Guzman
Office of Community Investment and Infrastructure, City and County of San Francisco
1 South Van Ness Avenue, 5th Floor
San Francisco, CA 94103

SOUTH OF MARKET

Gail Baugh
Hayes Valley Neighborhood Association
700 Hayes Street
San Francisco, CA 94102

Brian Basinger
Q Foundation – AIDS Housing Alliance/.SF
350 Golden Gate Ave. Suite A
San Francisco, CA 94102

David Lal
SF Citywide
870 Market St #815
San Francisco, CA 94102

Ramon Quintero
Tenderloin Neighborhood Development Corporation
149 Taylor Street
San Francisco, CA 94102

Marc Salomon
NEMNA – Northeast Mission Neighborhood Association
P.O. Box 410244
San Francisco, CA 94141

Sue Hestor
San Franciscans for Reasonable Growth (SFRG)
870 Market Street #1128
San Francisco, CA 94102

Antonio Flores
Hotel Zeppelin
545 Post Street
San Francisco, CA 94102

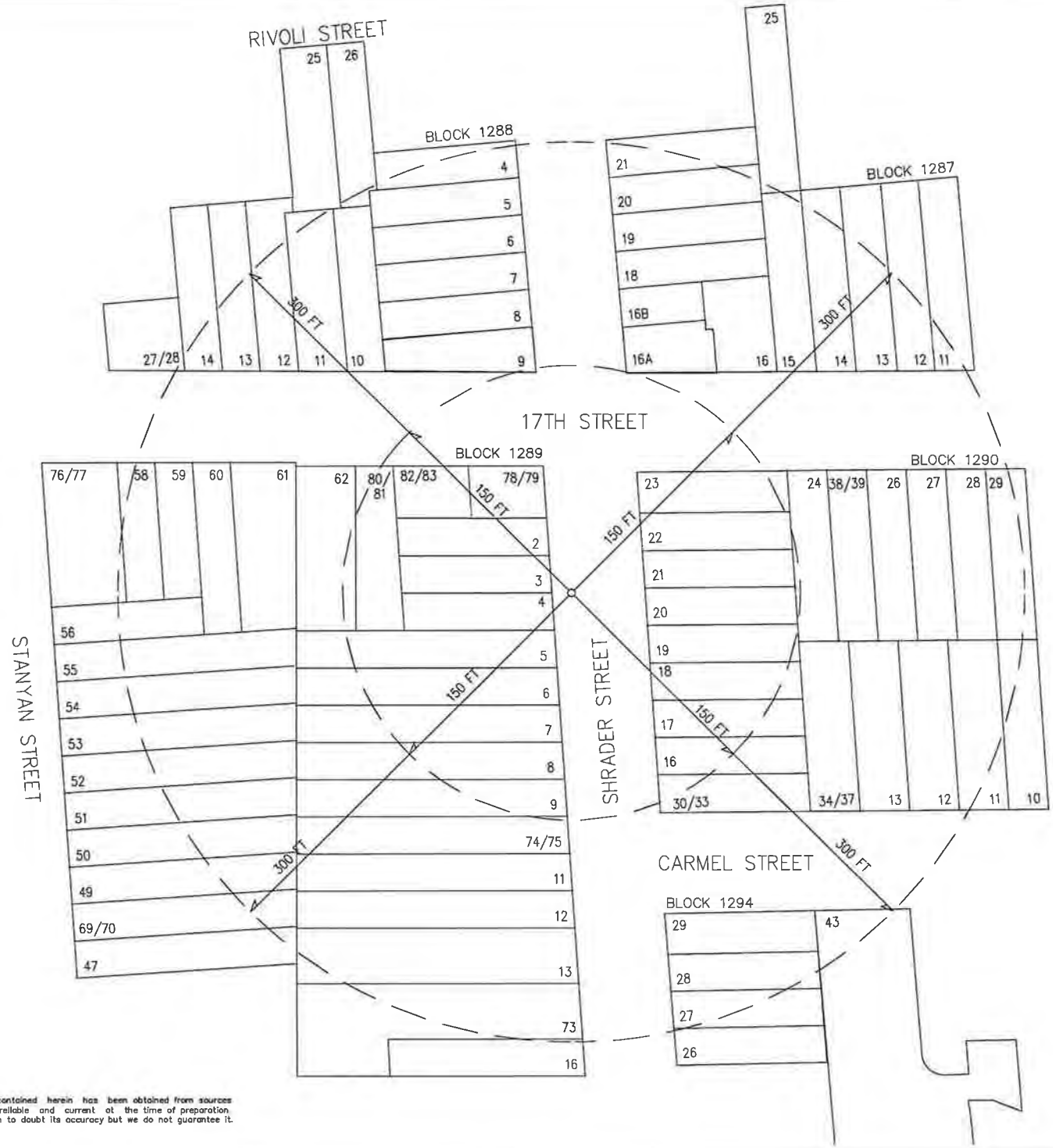

The information contained herein has been obtained from sources that we deemed reliable and current at the time of preparation. We have no reason to doubt its accuracy but we do not guarantee it.

RADIUS services
1221 Harrison Street, Suite 18
San Francisco CA 94103-4449
(415) 391-4775

BLOCK 1289
LOT 3

San Francisco, CA

SCALE: 1"=50'-0"

JOB NO:	DATE: 180219
1289002N	DRAWN: DC
	CHECKED: DC

PERMIT NOTIFICATION MAP

mobilitie

Mobilitie, LLC
2955 Redhill Avenue
Suite 200
Costa Mesa, CA 92626 USA

$ 00.47

San Francisco Planning Department
1650 Mission St #400
San Francisco, CA 94103

[redacted] Tentative Approval of Personal
[redacted] Services Facility Site Permit

[redacted] - Please Open Immediately

NOTICE OF TENTATIVE APPROVAL OF APPLICATION FOR A PERSONAL WIRELESS SERVICE FACILITY SITE PERMIT

Mark Farrell
Mayor

Mohammed Nuru
Director

Jerry Sanguinetti
Manager

Street Use and Mapping
1155 Market St., 3rd floor
San Francisco, CA 94103
tel 415-554-5810

sfpublicworks.org
facebook.com/sfpublicworks
twitter.com/sfpublicworks

5/25/2018

Public Works has tentatively approved the Application No. 18WR-0033 submitted by Mobilitie, LLC for a Personal Wireless Service Facility Site Permit in the vicinity of 1509 Shrader Street. The approval contains certain conditions that are attached to this letter These conditions may be modified prior to the issuance of a Personal Wireless Service Facility Site Permit at this location.

The equipment to be installed at this location include: One (1) antenna, one (1) equipment enclosure housing UE Relay and radio.

If approved, Mobilitie, LLC may install the permitted Personal Wireless Service Facility at this location. A photo-simulation of the proposed Personal Wireless Service Facility is attached hereto.

Pursuant to San Francisco Public Works Code § 1513, you have 20 days from the later of the date on this notice or the postmark to protest the Application.

To submit a protest of/or comments on the Application please visit the Public Works website at the following address: bsm.sfdpw.org and click "Comment on Permit" and enter "18WR-0033 " or send to the following address:

San Francisco Public Works
Bureau of Street-use and Mapping
1155 Market Street
San Francisco, CA 94103
Attn: Wireless Permit Protests

If a timely protest is submitted, Public Works will hold a public hearing to determine whether to grant the Application. Public Works will notify you at a later date of the date and time for the hearing.

The protest must be based on one or more of the following grounds

1. The Department of Public Health incorrectly determined that the Application complies with the Public Health Compliance Standard (see Public Works Code § 1507).

2. The Planning Department incorrectly determined that the Application meets the applicable Compatibility Standard (see Public Works Code § 1509).

3. The Application does not comply with any other requirement for obtaining a Personal Wireless Service Facility Site Permit.

4. The Applicant intends to modify the Personal Wireless Service Facility after the Permit is issued in a manner that would not comply with the applicable Compatibility Standard.

If the proposed location for the Personal Wireless Service Facility is in a residential or neighborhood commercial zoning district your protest may include a claim that the proposed Personal Wireless Service Facility obstructs the views from or blocks the light into any adjacent residential windows. (See Public Works Code § 1509(b)(2).) If your protest contains such a claim, please include with your protest photographs depicting the potential obstruction of the views from or the blocking of the light into your windows so that the Planning Department and/or hearing officer can evaluate this aspect of your protest. The Planning Department may contact you to ask permission to enter into your residence to investigate your claim. If the Planning

Department or hearing officer agrees with your concerns, the City may add certain conditions to its approval of the Application to ameliorate those concerns.

The Applicant does not know at this time whether it will file an Application for a permit to modify the proposed Personal Wireless Service Facility at any time during the term of the Personal Wireless Service Facility Site Permit.

In order to receive correspondence from Public Works, the Applicant, and other interested parties please include with your protest all of the following information: Street address, daytime telephone number, and email address (if available).

To obtain additional information concerning the Application, the tentative approval, or the protest you may contact James Singleton of Mobilitie at 650-814-0564 or JSingleton@mobilitie.com. You may also contact SF Public Works at (415) 554-5343.

For more information on Personal Wireless Service Facilities generally you can also visit www.sf-planning.org/wireless.

Public Works Wireless Program

PERMIT CONDITIONS

Approval of the proposed Personal Wireless Service Facility Site Permit has been recommended by San Francisco Public Works (Bureau of Street-Use and Mapping), San Francisco Department of Public Health, San Francisco Planning Department.

The tentative approval includes the following condition(s) that have been accepted by Applicant:

San Francisco Public Works Conditions:

1. This recommendation is based on no variation from the depicted drawings and/or photo simulation; if a variation is different a re-submittal is required. Should the installation vary from said conditions, it should be resubmitted to Department(s) for further review and comment
2. New Poles: no new poles shall be erected or placed in underground districts.
3. Down Guys: Follow all excavation codes to obtain the necessary permits for placement of down guys. Down guy shall avoid crossing conflicting areas but not limited to driveways, curb ramps.
4. Comply with ADA code requirements for Federal, State, local laws. Make sure path of minimum required clear width for accessible path of travel is four feet.
5. At the conclusion of the work, provide a set of as built photos of the installation to the Bureau Street Use & Mapping Permit Office.
6. Maintain a valid certification of insurance annually and forward a copy to the Bureau Street Use & Mapping Permit Office.

San Francisco Department of Public Health Conditions:

1. Ensure that any equipment associated with the pole installation of this antenna does not produce a noise in excess of 45 dBA as measured at three (3) feet from the nearest residential building façade.
2. Ensure that there are no publicly occupied areas within two and a half (2.50) feet from the face of the antenna.
3. Once the antenna is installed, Mobilitie must take RF power density measurements with the antenna operating at full power to verify the level reported in the Hammett and Edison report and to ensure that the FCC public exposure level is not exceeded in any publicly accessible area. This measurement must be taken again at the time of the permit renewal.
4. Mobilitie should be aware that the general public may have concerns about the antenna and potential RF source near their dwellings. Mobilitie should have in place a procedure for taking RF power density levels in nearby dwellings when requested by the members of the general public.
5. In accordance with the San Francisco Public Works Code, Art. 25, Sec. 1527 (a)(2)(C) Mobilitie is responsible for paying a fee of $210.00 to the San Francisco Department of Public Health for this review.

Please note that this approval and any conditions apply only to the equipment and installation as described. If any changes in the equipment or any increase in the effective radiated power described above are made, a new review by the Department of Public Health must be conducted.

San Francisco Planning Department Conditions:

1. Plant and maintain an appropriate street tree.
2. No exposed meter, meter pan or meter pedestal may be used.
3. Antenna, and all equipment (external conduit, radio relay units, blinders used to shroud bracket bolts [if needed], and mounting mechanisms); except signage, if used for screening, shall all be painted to match the pole and repainted as needed.
4. Cabling below radio relay units shall enter the pole with no more than a five-inch gap between bottom of each radio relay unit and the bottom of the corresponding entry hole on the pole. Conduit connection at pole entry points shall utilize the smallest fitting sizes available. Sealing compounds, if utilized, shall be tidy without excess bubbling and painted to match pole.
5. Remove raised equipment signage (including filling in manufacturer logo indentations on radio relay units/cabinets) and equipment decals that may be visible from sidewalk and dwellings, unless required by government regulation.
6. Utilize smallest RF warning signage allowed (4 x 6 inches); and place the warning sticker facing out toward street, at a location as close to antenna as is feasible. Sticker shall face away from street, when not facing

a nearby window within 15 feet. Background color of sticker shall match the pole-mounting surface; and logo and text shall be white.

7. Stack equipment enclosures (not including antenna) as close as allowed by applicable regulation and manufacturer equipment standards.
8. Seams and bolts/screws at antenna and shroud assembly area shall be fabricated and installed in a manner so as to reduce their visibility (e.g. flush mounting screws) from sidewalk level.
9. Not utilize any visible flashing indicator lights or similar.
10. Not obstruct the view from, or the light into any adjacent residential window.
11. New below ground enclosure excavations (vault), if utilized, shall not damage or remove granite curbs. No significant gaps shall be created between vault enclosure lid and primary sidewalk material due to installation. Any other existing historic architectural elements within the public right-of-way shall be retained and protected during installation. No carrier logo or carrier name may be placed on the vault lid.
12. Non-essential radio relay unit elements (handle and legs) shall be removed.
13. The installer shall arrange to have Planning Department staff review the initial installation, in order to ensure compliance with the aforementioned conditions (notwithstanding inspections by pole owner and Department of Public Works).
14. Ensure Wi-Fi Access Points and associated wiring, utilized by the City's Department of Technology, are not damaged during installation (if present).
15. Should the installation vary from said conditions, the application shall be resubmitted to the Planning Department for further review and comment.

view from Shrader Street looking northwest at site

mobilitie

[redacted] S [redacted] B
Adjacent [redacted] S [redacted] Francisco, CA
Photosims Produced on 2-6-2018

Existing

Proposed

AdvanceSim
Photo Simulation Solutions
Contact (925) 202-8507

Existing

Proposed

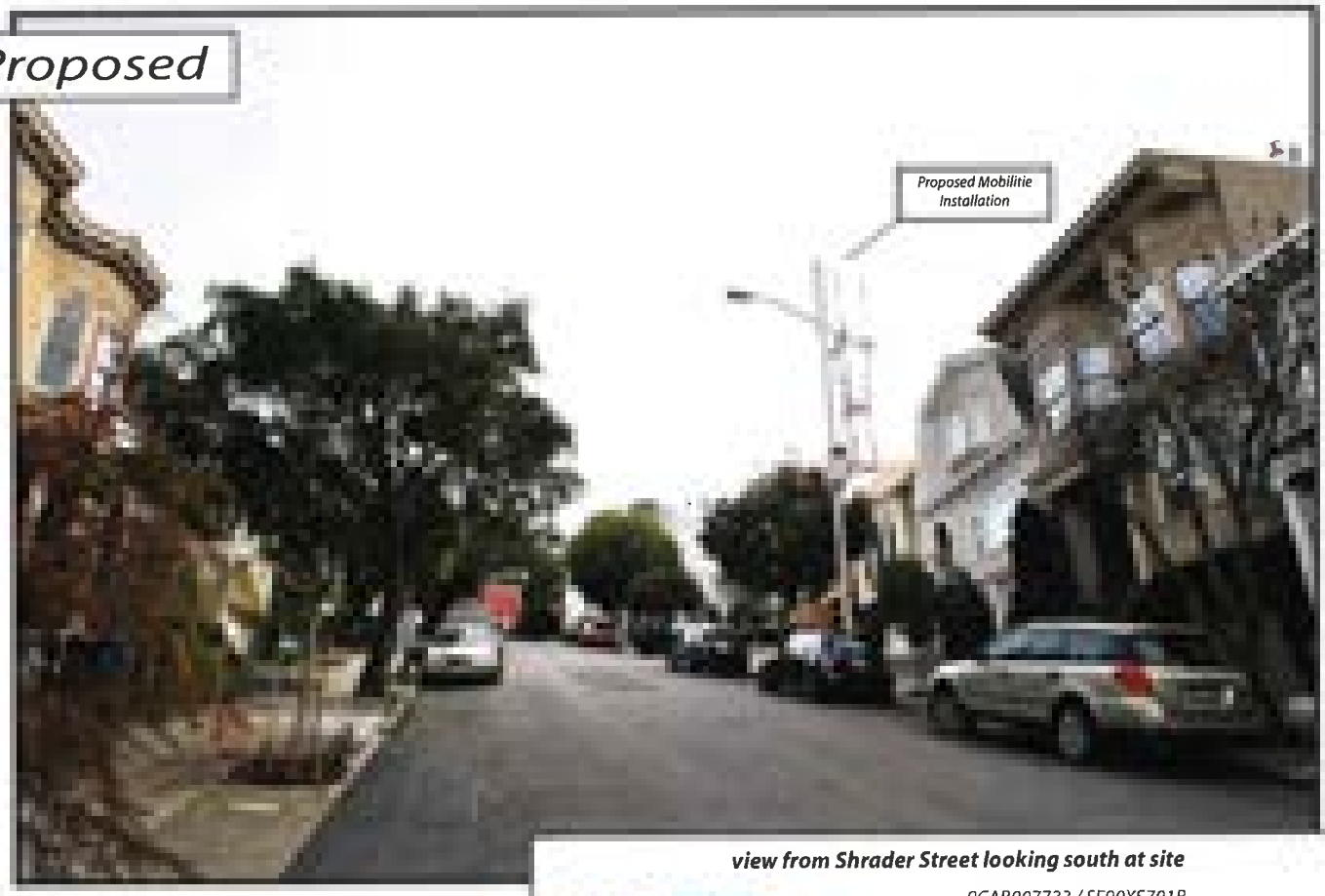

view from Shrader Street looking south at site

9CAB007733 / SF90XS701B
Adjacent to 1509 Shrader Street, San Francisco, CA
Photosims Produced on 2-6-2018

AdvanceSim
Photo Simulation Solutions
Contact (925) 207 8507

关于申请个人无线服务设施场所许可证的暂定批准通知

Mark Farrell
Mayor

Mohammed Nuru
Director

Jerry Sanguinetti
Manager

Street Use and Mapping
1155 Market St., 3rd floor
San Francisco, CA 94103
tel 415-554-5810

sfpublicworks.org
facebook.com/sfpublicworks
twitter.com/sfpublicworks

5/25/2018

公共工程部暂时批准了申请编号为 18WR-0033、由 Mobilitie，LLC 所提交的位于 1509 Shrader St 附近的个人无线服务设施场所许可证申请。该项批准包含本函随附的一些条件。在下发此地点的个人无线服务设施场所许可证之前，可能会修改这些条件。

要在此地点安装的设备包括：安装在电杆顶部的一(1)根天线，一(1)个固定在电杆外侧用于遮蔽 UE 继电器和无线电装置的设备外壳。

如果得到批准，Mobilitie，LLC 可以在此地点安装许可的个人无线服务设施。拟议的个人无线服务设施的仿真照片随附于此。

根据旧金山公共工程法典§1513，您从本通知或邮戳之日起（以较晚者为准）的 20 日内可以对此申请提出抗议。

如欲就申请提出抗议或评论，请按如下地址访问公共工程网站：bsm.sfdpw.org，然后点击“Comment on Permit（许可证评论）”并输入“18WR-0033”或邮寄到以下地址

San Francisco Public Works
Bureau of Street-use and Mapping
1155 Market Street
San Francisco, CA 94103
收件人：Wireless Permit Protests

如果提交了及时抗议，公共工程部门将举行公开听证会，以确定是否批准申请。公共工程部将在稍后的日期通知您有关听证会的日期和时间。

抗议必须基于以下一个或多个理由：

1. 公共卫生部门错误地认定该申请符合公共健康合规标准（参见公共工程法典 §1507）。
2. 规划部门错误地认定该申请符合适用的兼容性标准（参见公共工程法典§1509）。
3. 该申请不符合获得个人无线服务设施场所许可证的任何其他要求。
4. 申请人试图在许可证签发后以不符合适用的兼容性标准的方式修改个人无线服务设施。

如果个人无线服务设施的拟议地点位于住宅或社区商业区划区，则您的抗议可以包括关于拟议的个人无线服务设施妨碍视线或阻挡任何相邻住宅窗户采光的声明。（参见公共工程法典§1509(b)(2)）。如果您的抗议包含此类声明，请附上描述可能妨碍视野或阻挡光线进入您的窗户的抗议照片，以便规划部和/或听证官可以对您的抗议的这一方面进行评估。规划部门可能会与您联系，要求您允许进入您的住宅以对您的声明展开调查。如果规划部门或听证官同意您的担忧，市里可能会在批准申请时增加一些条件来缓解这些担忧。

申请人此时不知道其是否会在个人无线服务设施场所许可期限内的任何时候提出修改拟议的个人无线服务设施许可证的申请。

为了收到公共工程部的信件，请申请人和其他利益相关方在您的抗议中提供以下所有信息：街道地址、日间电话号码和电子邮件地址（如果有）。

要获得有关申请的其他信息和文件，您可以通过 650-814-0564 或 JSingleton@mobilitie.com 联系 Mobilitie 的 James Singleton。您也可以拨打(415) 554-5343 与旧金山公共工程部联系。

有关个人无线服务设施的更多信息，通常您还可以访问 www.sf-planning.org/wireless。

公共工程无线项目

许可条件

旧金山公共工程部（街道使用和测绘局）、旧金山公共卫生部和旧金山规划部建议批准拟议的个人无线服务设施场所许可证。

暂定批准包括申请人已接受的以下条件：

旧金山公共工程部条件：

1. 该建议基于与描绘图和/或模拟照片完全相符；如果存在不同变化，则需要重新提交。如果安装与上述情况不符，则应向各部门重新提交以便进行进一步审查和评论。
2. 新电杆：不应在地面以下区域竖立或放置新的电杆。
3. 向下拉线：按照所有的挖掘法规获得安装向下拉线的必要许可证。向下拉线应避免穿越交会区域，但不限于车道、路边坡道。
4. 遵守联邦、州和地方法律的 ADA 法规要求。 确保可进出通道的最小所需净宽度为 4 英尺。
5. 施工结束后，向街道使用和测绘局许可证办公室提供一套原样安装施工照片。
6. 每年保持一份有效的保险证明，并将副本转发给街道使用和测绘局许可证办公室。

旧金山公共卫生部条件：

- 确保与此天线的电杆安装相关的任何设备在离最近的住宅建筑立面三(3)英尺处测得的噪音不超过 45 dBA。

- 确保距离天线表面二点五(2.50)英尺内没有公共占用区域。

- 一旦安装了天线，Mobilitie 必须在天线以全功率工作的情况下进行射频功率密度测量，以验证 Hammett 和 Edison 报告中报告的电平，并确保在任何公众可接触的区域都不会超过 FCC 公众暴露级别。 在更换许可证时，必须再次进行此项测量。

- Mobilitie 应该意识到，公众可能对住宅附近的天线和潜在的射频源感到担忧。在公众要求的情况下，Mobilitie 应制定出台在附近的住宅进行射频功率密度水平测量的规程。

- 根据旧金山公共工程法典第 25 条第 1527 (a)(2)(C)项，Mobilitie 负责向旧金山公共卫生部门支付 210.00 美元的费用以进行审查。

请注意，此项批准和任何条件仅适用于所述的设备和安装。如果设备发生任何变化或上述有效辐射功率增加，则必须由公共卫生部门进行重新审查。

旧金山规划部条件：

1. 种植和维护适当的行道树。
2. 不可使用暴露的仪表、仪表盘或仪表底座。
3. 天线和所有设备（外部导管、无线电中继单元、用于遮盖支架螺栓的遮罩[如果需要]和安装机构）；除了标牌，如果用于屏幕，都应涂漆以与电杆相配并根据需要重新涂漆。
4. 无线电中继单元下方的布线必须在每个无线电中继单元底部与电杆上相应入口孔底部之间的距离不超过 5 英寸的情况下进入电杆。电杆入口处的导管连接应使用可用的最小接头尺寸。如果使用密封化合物，则应整齐，不得有过多的起泡，并涂漆以与电杆相配。
5. 除非政府法规要求，否则请移除高架设备标志（包括在无线电中继单元/机柜中填充制造商标志凹口）和从人行道和住宅中可能看到的设备标志。

6. 使用允许的最小射频警告标志（4 x 6 英寸）；并将警告标签朝向街道，朝向尽可能接近天线的位

置。标签在不面向附近 15 英尺内的窗户时，应面向远离街道的方向。标签的背景颜色应与立杆表面相匹配；徽标和文字应为白色。

7. 堆叠设备外壳（不包括天线）尽可能接近适用的法规和制造商设备标准许可。
8. 天线和护罩组装区域的接缝和螺栓/螺钉应以降低从人行道高度的可见度的方式进行装配和安装（例如与安装螺钉齐平）。
9. 不使用任何可视的闪烁指示灯或类似物。
10. 不妨碍任何相邻住宅窗户的景观或光线进入。
11. 如果使用新的地下围栏挖掘（拱顶），则不得损坏或去除花岗岩路缘。不得因安装在拱顶外壳盖和主要人行道材料之间产生显著的间隙。公共用地内的任何其他现有的历史建筑元素在安装期间应予以保留和保护。拱顶盖上不得放置运输公司标志或运输公司名称。
12. 应拆除非必要的无线电中继单元元件（手柄和支腿）。
13. 安装方应请规划部工作人员检查初始安装情况，以确保符合上述条件（尽管电杆所有方和公共工程部门会进行检查）。
14. 确保安装期间该市技术部门使用的 Wi-Fi 接入点和相关线路不会受到损坏（如果存在）。
15. 如果安装与上述条件不符，则应将该申请重新提交给规划部门进行进一步审查和评论。

AVISO DE APROBACIÓN TENTATIVA DE LA SOLICITUD PARA UN PERMISO DE SITIO DE INSTALACIÓN DE SERVICIO INALÁMBRICO PERSONAL

Mark Farrell
Mayor

Mohammed Nuru
Director

Jerry Sanguinetti
Manager

Street Use and Mapping
1155 Market St., 3rd floor
San Francisco, CA 94103
tel 415-554-5810

sfpublicworks.org
facebook.com/sfpublicworks
twitter.com/sfpublicworks

5/25/2018

Obras Públicas ha aprobado tentativamente la Solicitud n.º 18WR-0033 presentada por Mobilitie, LLC para un Permiso de sitio de instalación de servicio inalámbrico personal en las cercanías de 1509 Shrader St. La aprobación contiene ciertas condiciones que se adjuntan a esta carta. Estas condiciones se pueden modificar antes de la emisión de un Permiso de sitio de instalación de servicio inalámbrico personal en esta ubicación.

El equipo que se instalará en esta ubicación incluye: Una (1) antena montada en la parte superior del poste, una (1) carcasa de equipo fijada al costado del poste que aloja el relé y la radio del UE.

Si es aprobado, Mobilitie, LLC podrá instalar en esta ubicación el sitio de instalación de servicio inalámbrico personal permitido. A continuación se adjunta una simulación fotográfica del sitio de instalación de servicios inalámbricos personales propuesto.

En conformidad con el Código de Obras Públicas de San Francisco § 1513, usted tiene 20 días a partir de la última fecha de este aviso o el matasellos para protestar contra la Solicitud.

Para enviar una protesta o comentarios sobre la Solicitud, visite el sitio web de Obras Públicas en bsm.sfdpw.org, haga clic en "Comentar sobre el permiso" y escriba "18WR-0033 ", o envíe a la siguiente dirección:

San Francisco Public Works
Bureau of Street-use and Mapping
1155 Market Street
San Francisco, CA 94103
A la atención de: Protestas de permisos inalámbricos

Si se presenta una protesta oportuna, Obras Públicas llevará a cabo una audiencia pública para determinar si otorgar la Solicitud. Obras Públicas le notificará posteriormente a la fecha y hora de la audiencia.

La protesta debe basarse en uno o más de los siguientes motivos:

1. El Departamento de Salud Pública determinó incorrectamente que la Solicitud cumple con el Estándar de Cumplimiento de Salud Pública (vea el Código de Obras Públicas, § 1507).

2. El Departamento de Planificación determinó incorrectamente que la Solicitud cumple con el Estándar de Compatibilidad aplicable (vea el Código de Obras Públicas, § 1509).

3. La Solicitud no cumple con ningún otro requisito para obtener un Permiso de sitio de instalación de servicio inalámbrico personal.

4. El Solicitante tiene la intención de modificar el sitio de instalación de servicio inalámbrico personal después de la emisión del Permiso de una manera que no cumple con el Estándar de Compatibilidad aplicable.

Si la ubicación propuesta para el sitio de instalación de servicios inalámbricos personales se encuentra en un distrito de zonificación comercial residencial o de barrio, su protesta puede incluir un reclamo que indique que el sitio de instalación de servicios inalámbricos personales propuesto obstruye las vistas o bloquea la luz en alguna ventana residencial adyacente. (Consulte el Código de Obras Públicas, § 1509(b)(2)). Si su protesta contiene tal reclamo,

incluya con su protesta fotografías de la posible obstrucción de las vistas o el bloqueo de la luz en sus ventanas para que el Departamento de Planificación y/o el funcionario de audiencias puedan evaluar este aspecto de su protesta. El Departamento de Planificación puede contactarlo para solicitar permiso a fin de ingresar a su residencia para investigar su reclamo. Si el Departamento de Planificación o el funcionario de audiencias están de acuerdo con sus inquietudes, la Ciudad puede agregar ciertas condiciones a la aprobación de la Solicitud para paliar esas inquietudes.

El Solicitante no sabe en este momento si presentará una Solicitud de permiso para modificar el sitio de instalación de servicio inalámbrico personal propuesto en algún momento durante el plazo del Permiso de sitio de instalación de servicio inalámbrico personal.

Para recibir correspondencia de Obras Públicas, del Solicitante y de otras partes interesadas, incluya con su protesta toda la siguiente información: dirección postal, número de teléfono diurno y dirección de correo electrónico (si está disponible).

Para obtener información y documentos adicionales sobre la Solicitud, puede contactarse con James Singleton de Mobilitie al 650-814-0564 o a JSingleton@mobilitie.com. También puede comunicarse con Obras Públicas de San Francisco al (415) 554-5343.

Para obtener más información general sobre los sitios de instalación de servicio inalámbrico personal, también puede visitar www.sf-planning.org/wireless.

Programa inalámbrico de Obras Públicas

CONDICIONES DEL PERMISO

La aprobación del Permiso de sitio de instalación de servicio inalámbrico personal propuesto ha sido recomendada por Obras Públicas de San Francisco (Oficina de Uso y Mapeo de Calles), Departamento de Salud Pública de San Francisco, Departamento de Planificación de San Francisco.

La aprobación tentativa incluye las siguientes condiciones que han sido aceptadas por el Solicitante:

Condiciones de Obras Públicas de San Francisco:

1. Esta recomendación no se basa en ninguna variación de los dibujos representados y/o la simulación fotográfica; si una variación es diferente, se requiere una nueva presentación. En caso de que la instalación varíe con respecto a dichas condiciones, debe volver a enviarse al/los Departamentos para su posterior revisión y comentarios.
2. Nuevos postes: no se deben erigir nuevos postes ni colocarlos en distritos subterráneos.
3. Tirantes: Siga todos los códigos de excavación para obtener los permisos necesarios para la colocación de tirantes. Los tirantes evitarán cruzar áreas conflictivas, como entradas de vehículos, rampas de acera.
4. Cumplir con los requisitos del código ADA para las leyes federales, estatales y locales. Asegurarse de que la ruta de ancho libre mínimo requerido para la ruta de acceso sea de cuatro pies.
5. Al finalizar la obra, proporcionar un conjunto de fotos de la construcción terminada del sitio de instalación a la Oficina de Permisos de Uso y Mapeo de Calles.
6. Mantener una certificación válida de seguro anualmente y reenviar una copia a la Oficina de Permisos de Uso y Mapeo de Calles.

Condiciones del Departamento de Salud Pública de San Francisco:

- Asegúrese de que cualquier equipo asociado con la instalación de esta antena no produzca un ruido superior a 45 dBA medidos a tres (3) pies de la fachada del edificio residencial más cercano.

- Asegúrese de que no haya áreas ocupadas públicamente a dos y medio (2,50) pies de la cara de la antena.

- Una vez instalada la antena, Mobilitie debe tomar mediciones de densidad de potencia de RF con la antena operando a plena potencia para verificar el nivel reportado en el informe de Hammett y Edison y para garantizar que el nivel de exposición pública de la FCC no se exceda en ningún área públicamente accesible. Esta medición debe tomarse nuevamente al momento de la renovación del permiso.

- Mobilitie debe ser consciente de que el público en general puede tener dudas sobre la antena y la posible fuente de RF cerca de sus viviendas. Mobilitie debe tener un procedimiento para tomar los niveles de densidad de potencia de RF en las viviendas cercanas cuando así lo soliciten los miembros del público en general.

- De conformidad con el Código de Obras Públicas de San Francisco, art. 25, Sec. 1527 (a)(2)(C), Mobilitie es responsable de pagar una tarifa de $210,00 al Departamento de Salud Pública de San Francisco para esta revisión.

Tenga en cuenta que esta aprobación y todas las condiciones se aplican solo al equipo y la instalación tal como se describe. Si se realizan cambios en el equipo o hay un aumento en la potencia radiada efectiva descrita anteriormente, se debe realizar una nueva revisión por parte del Departamento de Salud Pública.

Condiciones del Departamento de Planificación de San Francisco:

1. Plante y mantenga un árbol callejero apropiado.
2. No se puede usar ningún medidor expuesto, bandeja de medición o pedestal de medidor.
3. La antena y todo el equipo (conducto externo, unidades de relé de radio, anteojeras utilizadas para proteger los pernos del soporte [si es necesario] y mecanismos de montaje), excepto la señalización, si se usa para el cribado, se pintarán para que coincidan con el poste y se repintarán según sea necesario.
4. El cableado debajo de las unidades de relé de radio debe ingresar al poste con un espacio de no más de cinco pulgadas entre la parte inferior de cada unidad de relé de radio y la parte inferior del orificio de entrada correspondiente en el poste. La conexión del conducto en los puntos de entrada del poste deberá utilizar los tamaños de conexión más pequeños disponibles. Los compuestos de sellado, si se utilizan, deben estar ordenados, sin exceso de burbujas, y pintados a tono con el poste.
5. Retire la señalización del equipo elevado (incluido el rellenado de las marcas del logotipo del fabricante en las unidades/armarios de relé de radio) y las calcomanías de los equipos que puedan verse desde la acera y las viviendas, a menos que lo exija la normativa gubernamental.

6. Utilice la señalización de advertencia de RF más pequeña permitida (4 x 6 pulgadas); y coloque la pegatina de advertencia mirando hacia la calle, en un lugar lo más cercano posible a la antena. La pegatina estará orientada en sentido contrario a la calle, cuando no esté orientada frente a una ventana a 15 pies o menos de distancia. El color de fondo de la pegatina debe coincidir con la superficie de montaje del poste; y el logo y el texto deben ser blancos.
7. Apile los recintos de los equipos (sin incluir la antena) lo más cerca que permita la normativa aplicable y los estándares del equipo del fabricante.
8. Las costuras y pernos/tornillos en el área de montaje de la antena y la cubierta se deben fabricar e instalar de manera tal que reduzca su visibilidad (por ejemplo, tornillos de montaje a ras) desde el nivel de la acera.
9. No utilice luces indicadoras intermitentes visibles o similares.
10. No obstruya la vista desde, ni la luz en ninguna ventana residencial adyacente.
11. Las nuevas excavaciones de cubierta subterránea (bóveda), si se utilizan, no deberán dañar ni eliminar los bordillos de granito. No se generarán espacios significativos entre la tapa de la caja de la bóveda y el material de la acera principal debido a la instalación. Cualquier otro elemento arquitectónico histórico existente dentro del derecho de paso público deberá conservarse y protegerse durante la instalación. No se puede colocar el logotipo o nombre del transportista en la tapa de la bóveda.
12. Los elementos de la unidad de relé de radio no esenciales (asa y patas) deben quitarse.
13. El instalador hará los arreglos necesarios para que el personal del Departamento de Planificación revise la instalación inicial, a fin de garantizar el cumplimiento de las condiciones antes mencionadas (sin perjuicio de las inspecciones del propietario del poste y del Departamento de Obras Públicas).
14. Asegúrese de que los puntos de acceso wifi y el cableado asociado, utilizados por el Departamento de Tecnología de la ciudad, no sufran daños durante la instalación (si están presentes).
15. En caso de que la instalación varíe con respecto a dichas condiciones, la solicitud se volverá a enviar al Departamento de Planificación para su posterior revisión y comentarios.

PAUNAWA SA PANSAMANTALANG PAG-APRUBA NG APLIKASYON PARA SA PERSONAL WIRELESS SERVICE FACILITY SITE PERMIT

Mark Farrell
Mayor

Mohammed Nuru
Director

Jerry Sanguinetti
Manager

Street Use and Mapping
1155 Market St., 3rd floor
San Francisco, CA 94103
tel 415-554-5810

sfpublicworks.org
facebook.com/sfpublicworks
twitter.com/sfpublicworks

5/25/2018

Pansamantalang inaprubahan ng Public Works ang Aplikasyon Blg. 18WR-0033 na isinumite ng Mobilitie, LLC para sa isang Personal Wireless Service Facility Site Permit sa paligid ng 1509 Shrader St. Ang pag-apruba ay naglalaman ng ilang mga kondisyon na nakalakip sa liham na ito. Ang mga kondisyong ito ay maaaring mabago bago ang pagpapalabas ng Personal Wireless Service Facility Site Permit sa lugar na ito.

Ang kagamitan na mai-install sa lugar na ito ay kinabibilangan ng: Isang (1) antenna na naka-mount sa tuktok ng poste, isang (1) bakod ng kagamitan na nakakabit sa tagiliran ng poste kung saan nakalagay ang UE Relay at radyo.

Kung maaaprubahan, maaaring i-install ng Mobilitie, LLC ang pinahihintulutang Personal Wireless Service Facility sa lokasyong ito. Isang litratong simulation ng ipinapanukalang Personal Wireless Service Facility ang nakalakip dito.

Alinsunod sa San Francisco Public Works Code § 1513, mayroon kang 20 araw mula sa mas nahuhuli sa petsa sa paunawang ito o ang marka sa koreo upang iprotesta ang Aplikasyon.

Upang magsumite ng isang protesta sa/o mga komento sa Aplikasyon, mangyaring bisitahin ang website ng Public Works sa sumusunod na address: bsm.sfdpw.org at i-klik ang "Magkomento sa Permit" at ipasok ang "18WR-0033 " o ipadala sa sumusunod na address:

San Francisco Public Works
Bureau of Street-use and Mapping
1155 Market Street
San Francisco, CA 94103
Attn: Wireless Permit Protests

Kung may isusumiteng protesta sa takdang panahon, magdaraos ang Public Works ng pampublikong pagdinig upang magpasya kung aaprubahan ang Aplikasyon. Aabisuhan ka ng Public Works sa ibang araw tungkol sa petsa at oras para sa pagdinig.

Ang protesta ay kailangang batay sa isa o higit pa sa mga sumusunod na dahilan

1. Mali ang pagpapasiya ng Kagawaran ng Pampublikong Kalusugan na ang Aplikasyon ay sumusunod sa Pamantayan sa Pagsunod sa Pampublikong Kalusugan (tingnan ang Public Works Code § 1507).

2. Mali ang pagpapasiya ng Kagawaran ng Pagpaplano na ang Aplikasyon ay tumutugon sa naaangkop na Pamantayan ng Pagkakabagay (tingnan ang Public Works Code § 1509).

3. Ang Aplikasyon ay hindi sumusunod sa anumang iba pang kinakailangan para sa pagkuha ng isang Personal Wireless Service Facility Site Permit.

4. Binabalak baguhin ng aplikante ang Personal Wireless Service Facility pagkatapos na maibigay ang Permit sa paraang hindi tumutupad sa naaangkop na Pamantayan ng Pagkakabagay.

Kung ang ipinapanukalang lokasyon para sa Personal Wireless Service Facility ay nasa isang zoning district na pangresidensya o pangkomersyo sa kapitbahayan, maaaring isama sa iyong protesta ang claim na ang iminumungkahing Personal Wireless Service Facility ay makakaharang ng tanawin mula sa o ng liwanag papunta

sa anumang katabing mga bintana ng tirahan. (Tingnan ang Public Works Code § 1509(b)(2).) Kung naglalaman ang iyong protesta ng ganoong claim, pakisama sa iyong protesta ang mga litrato na naglalarawan sa mga posibleng makakaharang ng mga tanawin mula sa o liwanag sa iyong mga bintana upang mapag-aralan ng Kagawaran ng Pagpaplano at/o opisyal ng pagdinig ang aspetong ito ng iyong protesta. Maaaring makipag-ugnayan sa iyo ang Kagawaran ng Pagpaplano upang humingi ng pahintulot na pumasok sa iyong tirahan para siyasatin ang iyong claim. Kung sumasang-ayon ang Kagawaran ng Pagpaplano o opisyal ng pagdinig sa iyong mga ipinag-aalala, maaaring magdagdag ang Lungsod ng ilang mga kondisyon sa pag-apruba nito sa Aplikasyon upang mapagaan ang mga pag-aalalang iyon.

Hindi alam ng Aplikante sa oras na ito kung ito ay maghahain ng isang Aplikasyon para sa isang permit na baguhin ang ipinapanukalang Personal Wireless Service Facility sa anumang oras sa panahon ng termino ng Personal Wireless Service Facility Site Permit.

Upang makatanggap ng mga liham mula sa Public Works, Aplikante, at iba pang mga interesadong partido mangyaring isama sa iyong protesta ang lahat ng sumusunod na impormasyon: Address ng kalye, numero ng telepono sa araw, at email address (kung mayroon).

Upang makakuha ng karagdagang impormasyon at mga dokumento tungkol sa Aplikasyon, maaari kang makipag-ugnay kay James Singleton ng Mobilitie sa 650-814-0564 o JSingleton@mobilitie.com . Maaari mo ring kontakin ang SF Public Works sa (415) 554-5343.

Para sa higit pang impormasyon tungkol sa Personal Wireless Service Facilities sa kalahatan maaari mo ring bisitahin ang www.sf-planning.org/wireless.

Public Works Wireless Program

MGA KONDISYON NG PERMIT

Inirerekomenda ng San Francisco Public Works (Bureau of Street-Use and Mapping), San Francisco Department of Public Health, San Francisco Planning Department ang pag-apruba sa ipinapanukalang Personal Wireless Service Facility Site Permit.

Kasama sa pansamantalang pag-apruba ang sumusunod na (mga) kondisyon na tinanggap ng Aplikante:

Mga Kondisyon ng San Francisco Public Works:

1. Ang rekomendasyong ito ay batay sa kondisyong walang kaibhan (variation) mula sa mga ipinakitang guhit at/o litratong simulation; kung ang isang kaibhan ay naiiba kinakailangan ang muling pagsusumite. Kung iba ang pag-install mula sa mga naturang kondisyon, dapat itong muling isumite sa (mga) Kagawaran para sa karagdagang pagsusuri at komento
2. Mga Bagong Poste: walang bagong poste ang itatayo o ilalagay sa mga distritong nasa ilalim ng lupa.
3. Down Guys: Sundin ang lahat ng code sa paghuhukay upang makuha ang mga kinakailangang permit para sa paglalagay ng down guys. Dapat iwasang tawirin ng down guys ang magkakasalungat na lugar ngunit hindi limitado sa mga daanan ng sasakyan, mga rampa ng kurbada.
4. Sumunod sa mga kinakailangan ng ADA code para sa Federal, Estado, mga lokal na batas. Tiyakin na ang daan ng pinakamababang kinakailangang lapad ng espasyo para sa daraanan ay apat na talampakan.
5. Sa pagtatapos ng trabaho, magbigay ng isang grupo ng mga litrato ng naitayo nang installation sa Bureau Street Use & Mapping Permit Office.
6. Panatilihin ang isang balidong sertipikasyon ng seguro taun-taon at magsumite ng isang kopya sa Bureau Street Use & Mapping Permit Office.

Mga Kondisyon ng Kagawaran ng Pampublikong Kalusugan ng San Francisco:

- Tiyakin na ang anumang mga kagamitan na nauugnay sa pag-install ng poste ng antenna na ito ay hindi gumagawa ng ingay na lampas sa 45 dBA na nasusukat sa tatlong (3) talampakan mula sa pinakamalapit na harapan ng gusaling tirahan.

- Tiyakin na walang mga lugar na okupado ng publiko sa loob ng dalawa at kalahating (2.50) talampakan mula sa mukha ng antenna.

- Sa sandaling ma-install na ang antenna, kailangang sukatin ng Mobilitie ang RF power density habang gumagana ang antenna sa sukdulang lakas upang beripikahin ang antas na iniulat sa Hammett and Edison report at upang matiyak na ang antas ng pagkakalantad ng publiko ayon sa FCC ay hindi nalalampasan sa anumang lugar na naa-access ng publiko. Ang pagsukat na ito ay kailangang gawin muli sa panahon ng pag-renew ng permit.

- Dapat malaman ng Mobilitie na maaaring may mga ipinag-aalala ang kalahatang publiko tungkol sa antenna at posibleng pagmumulan ng RF na malapit sa kanilang mga tirahan. Dapat ay may pamamaraan ang Mobilitie sa pagkuha ng mga antas ng density ng lakas ng RF sa mga kalapit na tirahan kapag hiniling ng mga miyembro ng kalahatang publiko.

- Alinsunod sa San Francisco Public Works Code, Art. 25, Sec. 1527 (a)(2)(C) ang Mobilitie ay may pananagutang magbayad ng $ 210.00 sa Kagawaran ng Pampublikong Kalusugan ng San Francisco para sa pagsusuring ito.

Mangyaring tandaan na ang pag-aprubang ito at anumang mga kondisyon ay nalalapat lamang sa kagamitan at installation tulad ng inilarawan. Kung may gagawing anumang mga pagbabago sa kagamitan o anumang pagtaas sa epektibong radiated power na

inilarawan sa itaas, isang bagong pagsusuri ng Kagawaran ng Pampublikong Kalusugan ang kailangang isagawa.

Mga Kondisyon ng Kagawaran ng Pagpaplano ng San Francisco:

1. Magtanim at magpanatili ang naaangkop na puno sa kalye.
2. Walang nakalantad na meter, meter pan o meter pedestal ang maaaring gamitin.
3. Ang antenna, at lahat ng mga kagamitan (panlabas na tubo, mga relay unit ng radyo, mga blinder na ginamit upang balutin ang mga bracket bolt [kung kinakailangan], at mga mekanismo ng pag-mount); maliban sa signage, kung gagamitin para sa screening, ay pipinturahan lahat upang tumugma sa poste at muling pipinturahan kung kinakailangan.
4. Ang kable sa ilalim ng mga relay unit ng radyo ay dapat pumasok sa poste nang hindi hihigit sa limang-pulgada ang puwang sa pagitan ng ilalim ng bawat relay unit ng radyo at sa ilalim ng kaukulang butas ng pagpasok sa poste. Ang koneksyon sa tubo sa mga entry point ng poste ay dapat gumamit ng pinakamaliit na sukat na makukuha. Ang mga sealing compound, kung ginagamit, ay dapat malinis na walang labis na bulubok at pininturahan upang tumugma sa poste.
5. Alisin ang nakaangat na signage ng kagamitan (kabilang ang mga nakabaon na marka ng logo ng tagagawa sa mga relay unit/cabinet ng radio) at equipment decal na maaaring nakikita mula sa bangketa at tirahan, maliban kung ipinag-uutos ng regulasyon ng pamahalaan.
6. Gamitin ang pinakamaliit na RF warning signage na pinapayagan (4 x 6 na pulgada); at ilagay ang sticker ng babala na nakaharap sa kalye, sa isang lokasyong pinakamalapit sa antenna hanggat maaari. Dapat nakaturo ang sticker palayo sa kalye, kapag hindi nakaharap sa isang kalapit na bintana sa loob ng 15 talampakan. Ang kulay ng background ng sticker ay dapat tumugma sa ibabaw kung saan naka-mount ang poste; at ang logo at teksto ay dapat na puti.
7. Itabi ang mga bakod ng kagamitan (hindi kasama ang antenna) sa pinakamalapit na pinahihintulutan ng mga naaangkop na regulasyon at mga pamantayan sa kagamitan ng tagagawa.
8. Ang mga gilid at bolt/screw sa antenna at shroud assembly area ay dapat na gawin at mai-install sa paraang hindi gaanong nakikita ang mga ito (hal. flush mounting screws) mula sa bangketa.
9. Huwag gumamit ng anumang nakikitang mga ilaw na kumikislap-kislap o katulad nito.
10. Huwag harangan ang tanawin mula sa, o ang ilaw sa katabing bintana ng tirahan.
11. Kung gagamit ng bagong mga paghukay ng bakod (vault) sa ilalim ng lupa, hindi dapat ito makapinsala o magtanggal ng mga granite sa kurbada. Walang malalaking puwang ang dapat na malikha sa pagitan ng vault enclosure lid at materyal ng pangunahing bangketa sanhi ng pag-install. Ang anumang iba pang mga kasalukuyang makasaysayang elemento ng arkitektura sa loob ng pampublikong karapatan sa daan ay mananatili at poprotektahan sa panahon ng pag-install. Walang logo ng carrier o pangalan ng carrier ang maaaring ilagay sa takip ng vault.
12. Ang mga hindi kinakailangang elemento ng relay unit ng radyo (hawakan at binti) ay aalisin.
13. Dapat asikasuhin ng taga-install na masuri ng tauhan ng Kagawaran ng Pagpaplano ang paunang pag-install, upang masigurong sinusunod ang mga naunang nabanggit na kondisyon (sa kabila ng mga pag-iinspeksyon ng may-ari ng poste at Department of Public Works).
14. Tiyakin na ang Mga Wi-Fi Access Point at kaugnay na mga kable, na ginagamit ng Kagawaran ng Teknolohiya ng Lunsod, ay hindi napinsala sa panahon ng pag-install (kung mayroon).
15. Kung naiiba ang pag-install mula sa mga nasabing kondisyon, ang aplikasyon ay dapat muling isumite sa Kagawaran ng Pagpaplano para sa karagdagang pagsusuri at komento.

EXHIBIT G

[Declaration for Posting Notice of Tentative Approval attached behind this page (24 pages).]

Exhibit G

STATE OF CALIFORNIA)
) ss.
COUNTY OF SAN FRANCISCO)

DECLARATION OF POSTING RE: POSTING OF NOTICE OF TENTATIVE APPROVAL OF APPLICATION FOR A PERSONAL WIRELESS SERVICE FACILITY SITE PERMIT

I, [James Singleton] do hereby declare as follows:

1. I am a Permitting Manager at Mobilitie LLC. I am over 18 years of age and I am a resident of Marin County, State of California.

2. On [5/30/2018] Mobilitie LLC. caused to be posted a copy of the "Tentative Approval of Personal Wireless Service Facility Site Permit" for Permit [18WR-0033] to streetlight poles located along the block face upon which the Personal Wireless Service Facility is located. Location posted in compliance with Public Works Code 1512(b)(2).

I declare under penalty of perjury under the laws of the State of California that the foregoing is true and correct.

Executed 5/30/2018 at County of San Francisco, California.

By: James Singleton

_[James Singleton]_____

18WR-0033
1509 Shrader St

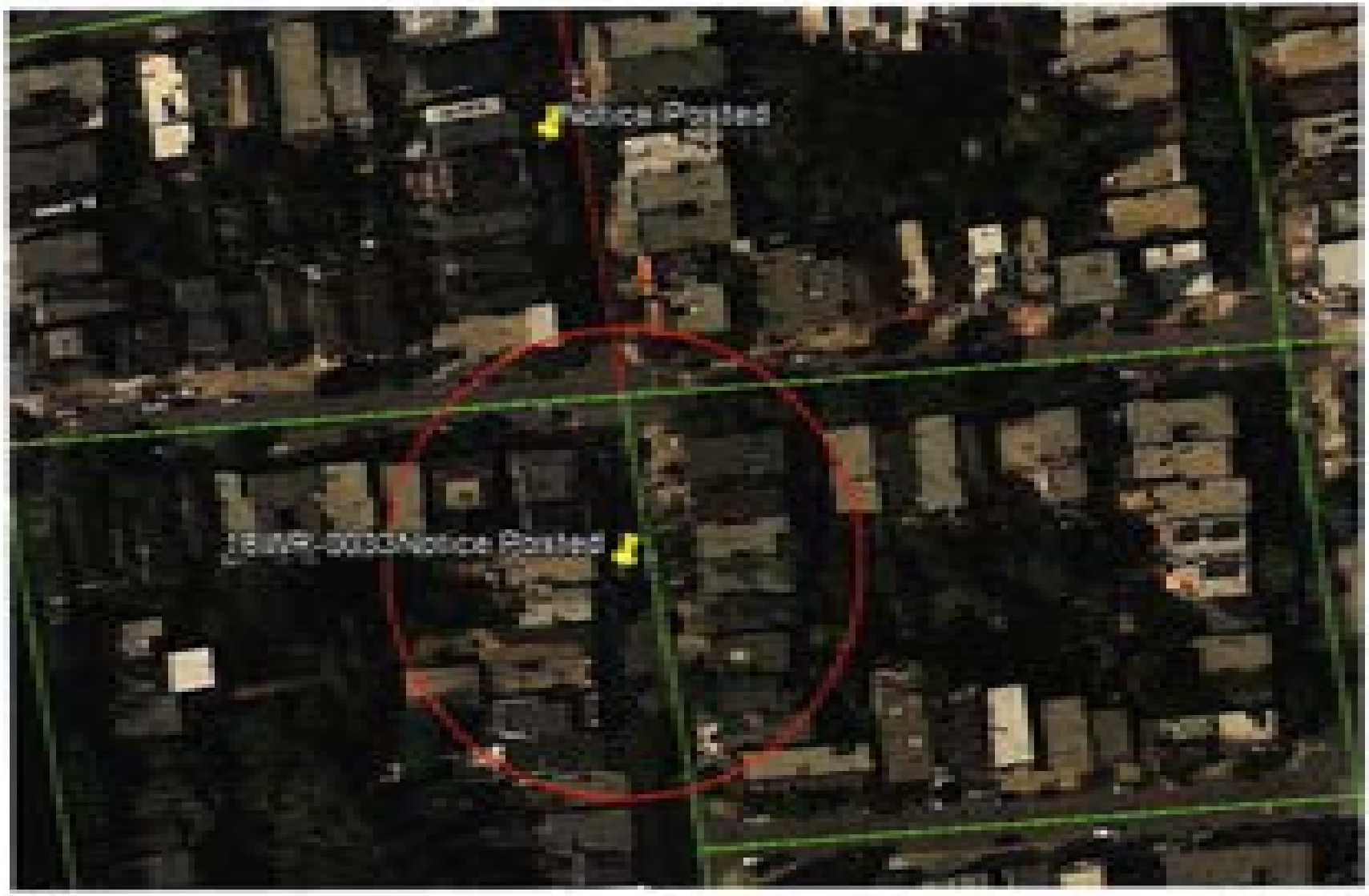
Notice Posted
18WR-0033Notice Posted

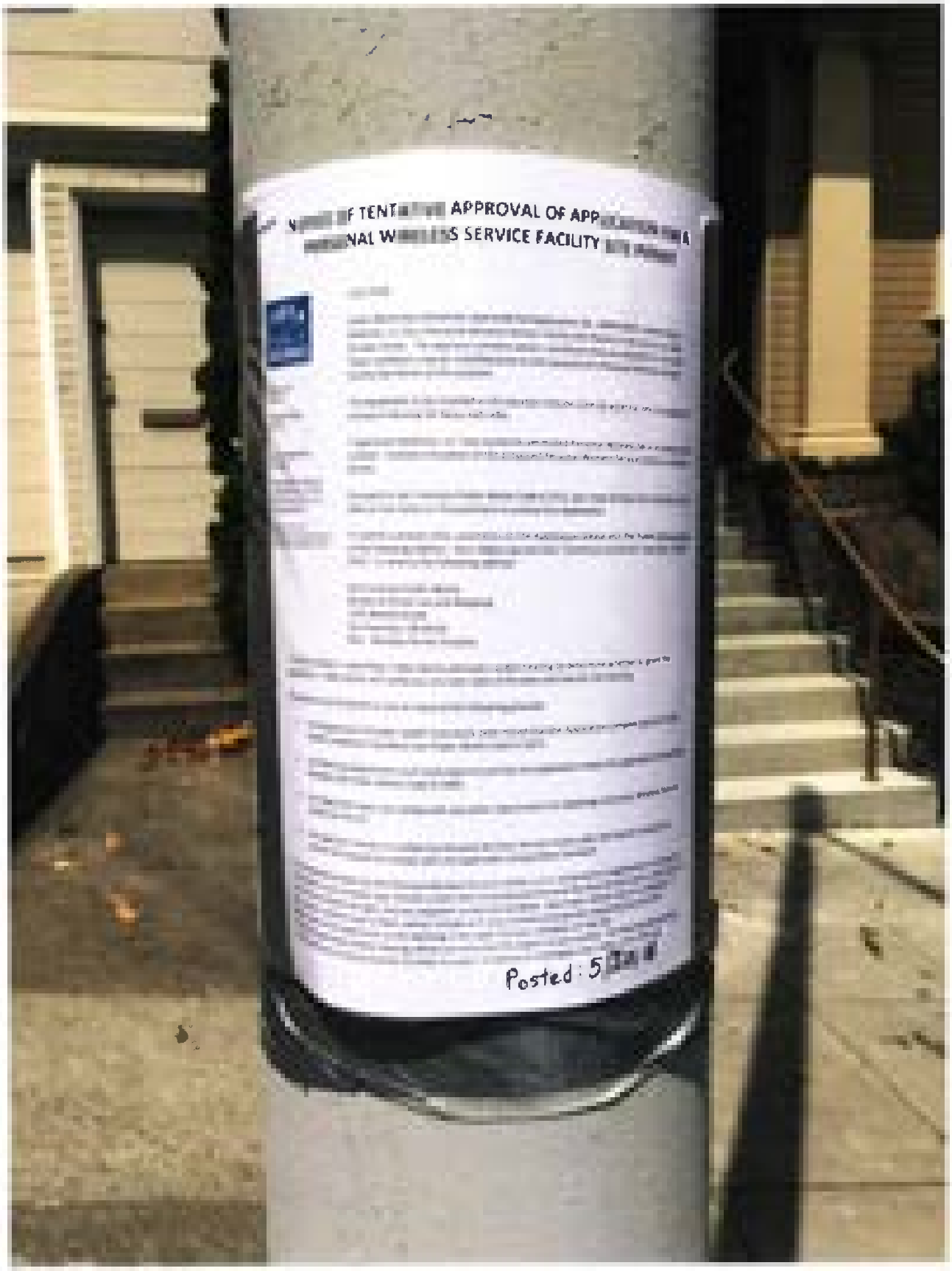
OF TENTATIVE APPROVAL OF APP
NAL WIRELESS SERVICE FACILITY
Posted: 5


NOTICE OF TENTATIVE APPROVAL OF
PERSONAL WIRELESS SERVICE
Posted:

NOTICE OF TENTATIVE APPROVAL OF APPLICATION FOR A PERSONAL WIRELESS SERVICE FACILITY SITE PERMIT

Mark Farrell
Mayor

Mohammed Nuru
Director

Jerry Sanguinetti
Manager

Street Use and Mapping
1155 Market St., 3rd floor
San Francisco, CA 94103
tel 415-554-5810

sfpublicworks.org
facebook.com/sfpublicworks
twitter.com/sfpublicworks

5/25/2018

Public Works has tentatively approved the Application No. 18WR-0033 submitted by Mobilitie, LLC for a Personal Wireless Service Facility Site Permit in the vicinity of 1509 Shrader Street. The approval contains certain conditions that are attached to this letter These conditions may be modified prior to the issuance of a Personal Wireless Service Facility Site Permit at this location.

The equipment to be installed at this location include: One (1) antenna, one (1) equipment enclosure housing UE Relay and radio.

If approved, Mobilitie, LLC may install the permitted Personal Wireless Service Facility at this location. A photo-simulation of the proposed Personal Wireless Service Facility is attached hereto.

Pursuant to San Francisco Public Works Code § 1513, you have 20 days from the later of the date on this notice or the postmark to protest the Application.

To submit a protest of/or comments on the Application please visit the Public Works website at the following address: bsm.sfdpw.org and click "Comment on Permit" and enter "18WR-0033 " or send to the following address:

San Francisco Public Works
Bureau of Street-use and Mapping
1155 Market Street
San Francisco, CA 94103
Attn: Wireless Permit Protests

If a timely protest is submitted, Public Works will hold a public hearing to determine whether to grant the Application. Public Works will notify you at a later date of the date and time for the hearing.

The protest must be based on one or more of the following grounds:

1. The Department of Public Health incorrectly determined that the Application complies with the Public Health Compliance Standard (see Public Works Code § 1507).

2. The Planning Department incorrectly determined that the Application meets the applicable Compatibility Standard (see Public Works Code § 1509).

3. The Application does not comply with any other requirement for obtaining a Personal Wireless Service Facility Site Permit.

4. The Applicant intends to modify the Personal Wireless Service Facility after the Permit is issued in a manner that would not comply with the applicable Compatibility Standard.

If the proposed location for the Personal Wireless Service Facility is in a residential or neighborhood commercial zoning district your protest may include a claim that the proposed Personal Wireless Service Facility obstructs the views from or blocks the light into any adjacent residential windows. (See Public Works Code § 1509(b)(2).) If your protest contains such a claim, please include with your protest photographs depicting the potential obstruction of the views from or the blocking of the light into your windows so that the Planning Department and/or hearing officer can evaluate this aspect of your protest. The Planning Department may contact you to ask permission to enter into your residence to investigate your claim. If the Planning

Department or hearing officer agrees with your concerns, the City may add certain conditions to its approval of the Application to ameliorate those concerns.

The Applicant does not know at this time whether it will file an Application for a permit to modify the proposed Personal Wireless Service Facility at any time during the term of the Personal Wireless Service Facility Site Permit.

In order to receive correspondence from Public Works, the Applicant, and other interested parties please include with your protest all of the following information: Street address, daytime telephone number, and email address (if available).

To obtain additional information concerning the Application, the tentative approval, or the protest you may contact James Singleton of Mobilitie at 650-814-0564 or JSingleton@mobilitie.com. You may also contact SF Public Works at (415) 554-5343.

For more information on Personal Wireless Service Facilities generally you can also visit www.sf-planning.org/wireless.

Public Works Wireless Program

PERMIT CONDITIONS

Approval of the proposed Personal Wireless Service Facility Site Permit has been recommended by San Francisco Public Works (Bureau of Street-Use and Mapping), San Francisco Department of Public Health, San Francisco Planning Department.

The tentative approval includes the following condition(s) that have been accepted by Applicant:

San Francisco Public Works Conditions:

1. This recommendation is based on no variation from the depicted drawings and/or photo simulation; if a variation is different a re-submittal is required. Should the installation vary from said conditions, it should be resubmitted to Department(s) for further review and comment
2. New Poles: no new poles shall be erected or placed in underground districts.
3. Down Guys: Follow all excavation codes to obtain the necessary permits for placement of down guys. Down guy shall avoid crossing conflicting areas but not limited to driveways, curb ramps.
4. Comply with ADA code requirements for Federal, State, local laws. Make sure path of minimum required clear width for accessible path of travel is four feet.
5. At the conclusion of the work, provide a set of as built photos of the installation to the Bureau Street Use & Mapping Permit Office.
6. Maintain a valid certification of insurance annually and forward a copy to the Bureau Street Use & Mapping Permit Office.

San Francisco Department of Public Health Conditions:

1. Ensure that any equipment associated with the pole installation of this antenna does not produce a noise in excess of 45 dBA as measured at three (3) feet from the nearest residential building façade.
2. Ensure that there are no publicly occupied areas within two and a half (2.50) feet from the face of the antenna.
3. Once the antenna is installed, Mobilitie must take RF power density measurements with the antenna operating at full power to verify the level reported in the Hammett and Edison report and to ensure that the FCC public exposure level is not exceeded in any publicly accessible area. This measurement must be taken again at the time of the permit renewal.
4. Mobilitie should be aware that the general public may have concerns about the antenna and potential RF source near their dwellings. Mobilitie should have in place a procedure for taking RF power density levels in nearby dwellings when requested by the members of the general public.
5. In accordance with the San Francisco Public Works Code, Art. 25, Sec. 1527 (a)(2)(C) Mobilitie is responsible for paying a fee of $210.00 to the San Francisco Department of Public Health for this review.

Please note that this approval and any conditions apply only to the equipment and installation as described. If any changes in the equipment or any increase in the effective radiated power described above are made, a new review by the Department of Public Health must be conducted.

San Francisco Planning Department Conditions:

1. Plant and maintain an appropriate street tree.
2. No exposed meter, meter pan or meter pedestal may be used.
3. Antenna, and all equipment (external conduit, radio relay units, blinders used to shroud bracket bolts [if needed], and mounting mechanisms); except signage, if used for screening, shall all be painted to match the pole and repainted as needed.
4. Cabling below radio relay units shall enter the pole with no more than a five-inch gap between bottom of each radio relay unit and the bottom of the corresponding entry hole on the pole. Conduit connection at pole entry points shall utilize the smallest fitting sizes available. Sealing compounds, if utilized, shall be tidy without excess bubbling and painted to match pole.
5. Remove raised equipment signage (including filling in manufacturer logo indentations on radio relay units/cabinets) and equipment decals that may be visible from sidewalk and dwellings, unless required by government regulation.
6. Utilize smallest RF warning signage allowed (4 x 6 inches); and place the warning sticker facing out toward street, at a location as close to antenna as is feasible. Sticker shall face away from street, when not facing

a nearby window within 15 feet. Background color of sticker shall match the pole-mounting surface; and logo and text shall be white.

7. Stack equipment enclosures (not including antenna) as close as allowed by applicable regulation and manufacturer equipment standards.
8. Seams and bolts/screws at antenna and shroud assembly area shall be fabricated and installed in a manner so as to reduce their visibility (e.g. flush mounting screws) from sidewalk level.
9. Not utilize any visible flashing indicator lights or similar.
10. Not obstruct the view from, or the light into any adjacent residential window.
11. New below ground enclosure excavations (vault), if utilized, shall not damage or remove granite curbs. No significant gaps shall be created between vault enclosure lid and primary sidewalk material due to installation. Any other existing historic architectural elements within the public right-of-way shall be retained and protected during installation. No carrier logo or carrier name may be placed on the vault lid.
12. Non-essential radio relay unit elements (handle and legs) shall be removed.
13. The installer shall arrange to have Planning Department staff review the initial installation, in order to ensure compliance with the aforementioned conditions (notwithstanding inspections by pole owner and Department of Public Works).
14. Ensure Wi-Fi Access Points and associated wiring, utilized by the City's Department of Technology, are not damaged during installation (if present).
15. Should the installation vary from said conditions, the application shall be resubmitted to the Planning Department for further review and comment.

view from Shrader Street looking northwest at site

mobilitie

Adjacent [redacted] S [redacted] B
[redacted] S [redacted] Francisco, CA

Photosims Produced on 2-6-2018

Existing

Proposed

AdvanceSim
Photo Simulation Solution
Contact (925) 202-8507

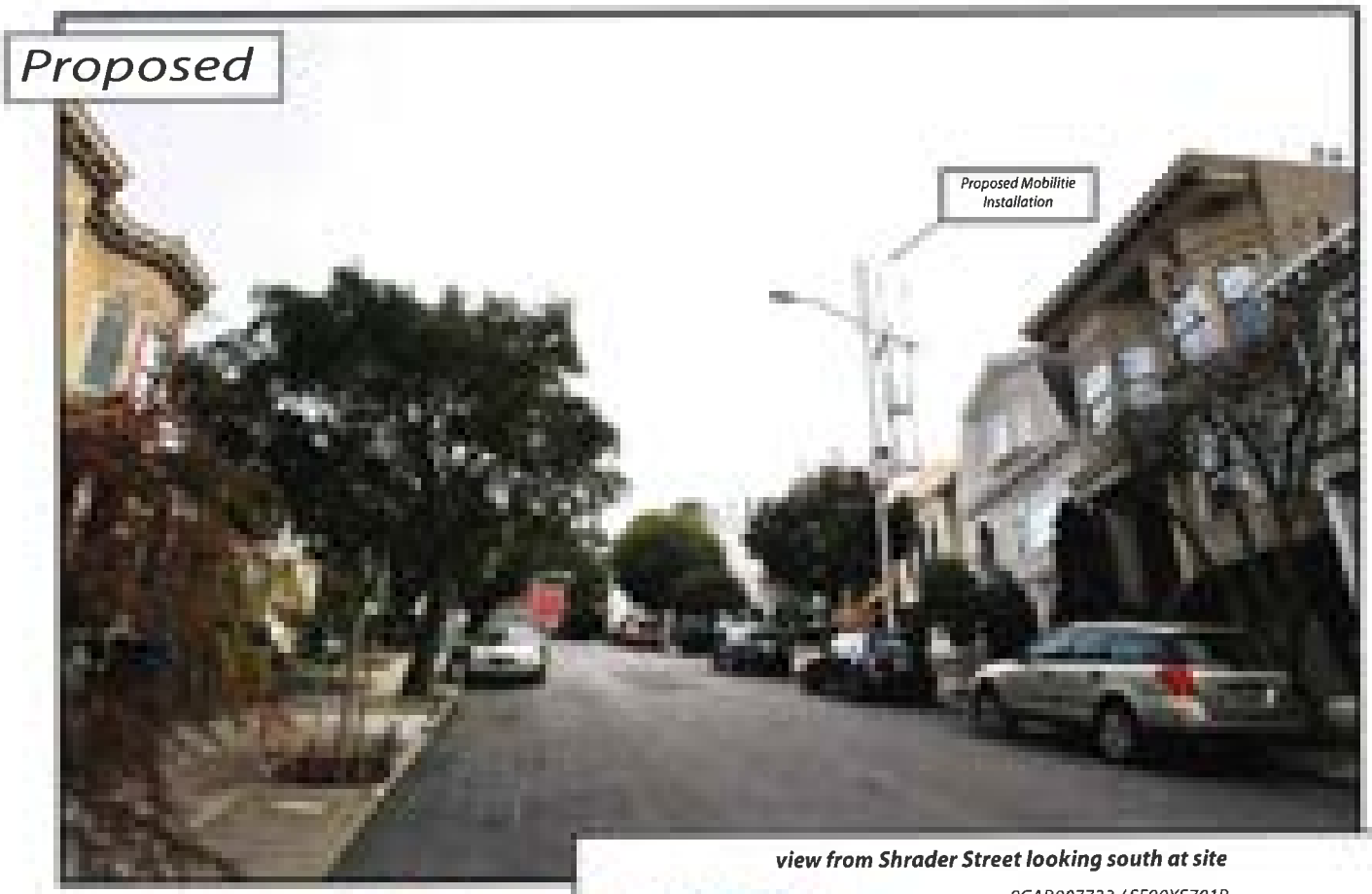

view from Shrader Street looking south at site

9CAB007733 / SF90XS701B
Adjacent to 1509 Shrader Street, San Francisco, CA
Photosims Produced on 2-6-2018

AdvanceSimpact
Photo Simulation Solutions
Contact (925) 202-6507

关于申请个人无线服务设施场所许可证的暂定批准通知

Mark Farrell
Mayor

Mohammed Nuru
Director

Jerry Sanguinetti
Manager

Street Use and Mapping
1155 Market St., 3rd floor
San Francisco, CA 94103
tel 415-554-5810

sfpublicworks.org
facebook.com/sfpublicworks
twitter.com/sfpublicworks

5/25/2018

公共工程部暂时批准了申请编号为 18WR-0033、由 Mobilitie，LLC 所提交的位于 1509 Shrader St 附近的个人无线服务设施场所许可证申请。该项批准包含本函随附的一些条件。在下发此地点的个人无线服务设施场所许可证之前，可能会修改这些条件。

要在此地点安装的设备包括：安装在电杆顶部的一(1)根天线，一(1)个固定在电杆外侧用于遮蔽 UE 继电器和无线电装置的设备外壳。

如果得到批准，Mobilitie，LLC 可以在此地点安装许可的个人无线服务设施。拟议的个人无线服务设施的仿真照片随附于此。

根据旧金山公共工程法典§1513，您从本通知或邮戳之日起（以较晚者为准）的 20 日内可以对此申请提出抗议。

如欲就申请提出抗议或评论，请按如下地址访问公共工程网站：bsm.sfdpw.org，然后点击“Comment on Permit（许可证评论）”并输入“18WR-0033”或邮寄到以下地址

San Francisco Public Works
Bureau of Street-use and Mapping
1155 Market Street
San Francisco, CA 94103
收件人：Wireless Permit Protests

如果提交了及时抗议，公共工程部门将举行公开听证会，以确定是否批准申请。公共工程部将在稍后的日期通知您有关听证会的日期和时间。

抗议必须基于以下一个或多个理由：

1. 公共卫生部门错误地认定该申请符合公共健康合规标准（参见公共工程法典 §1507）。
2. 规划部门错误地认定该申请符合适用的兼容性标准（参见公共工程法典§1509）。
3. 该申请不符合获得个人无线服务设施场所许可证的任何其他要求。
4. 申请人试图在许可证签发后以不符合适用的兼容性标准的方式修改个人无线服务设施。

如果个人无线服务设施的拟议地点位于住宅或社区商业区划区，则您的抗议可以包括关于拟议的个人无线服务设施妨碍视线或阻挡任何相邻住宅窗户采光的声明。（参见公共工程法典§1509(b)(2)）。如果您的抗议包含此类声明，请附上描述可能妨碍视野或阻挡光线进入您的窗户的抗议照片，以便规划部和/或听证官可以对您的抗议的这一方面进行评估。规划部门可能会与您联系，要求您允许进入您的住宅以对您的声明展开调查。如果规划部门或听证官同意您的担忧，市里可能会在批准申请时增加一些条件来缓解这些担忧。

申请人此时不知道其是否会在个人无线服务设施场所许可期限内的任何时候提出修改拟议的个人无线服务设施许可证的申请。

为了收到公共工程部的信件，请申请人和其他利益相关方在您的抗议中提供以下所有信息：街道地址、日间电话号码和电子邮件地址（如果有）。

要获得有关申请的其他信息和文件，您可以通过 650-814-0564 或 JSingleton@mobilitie.com 联系 Mobilitie 的 James Singleton。您也可以拨打(415) 554-5343 与旧金山公共工程部联系。

有关个人无线服务设施的更多信息，通常您还可以访问 www.sf-planning.org/wireless。

公共工程无线项目

许可条件

旧金山公共工程部（街道使用和测绘局）、旧金山公共卫生部和旧金山规划部建议批准拟议的个人无线服务设施场所许可证。

暂定批准包括申请人已接受的以下条件：

旧金山公共工程部条件：

1. 该建议基于与描绘图和/或模拟照片完全相符；如果存在不同变化，则需要重新提交。如果安装与上述情况不符，则应向各部门重新提交以便进行进一步审查和评论。
2. 新电杆：不应在地面以下区域竖立或放置新的电杆。
3. 向下拉线：按照所有的挖掘法规获得安装向下拉线的必要许可证。向下拉线应避免穿越交会区域，但不限于车道、路边坡道。
4. 遵守联邦、州和地方法律的 ADA 法规要求。 确保可进出通道的最小所需净宽度为 4 英尺。
5. 施工结束后，向街道使用和测绘局许可证办公室提供一套原样安装施工照片。
6. 每年保持一份有效的保险证明，并将副本转发给街道使用和测绘局许可证办公室。

旧金山公共卫生部条件：

- 确保与此天线的电杆安装相关的任何设备在离最近的住宅建筑立面三(3)英尺处测得的噪音不超过 45 dBA。

- 确保距离天线表面二点五(2.50)英尺内没有公共占用区域。

- 一旦安装了天线，Mobilitie 必须在天线以全功率工作的情况下进行射频功率密度测量，以验证 Hammett 和 Edison 报告中报告的电平，并确保在任何公众可接触的区域都不会超过 FCC 公众暴露级别。 在更换许可证时，必须再次进行此项测量。

- Mobilitie 应该意识到，公众可能对住宅附近的天线和潜在的射频源感到担忧。在公众要求的情况下，Mobilitie 应制定出台在附近的住宅进行射频功率密度水平测量的规程。

- 根据旧金山公共工程法典第 25 条第 1527 (a)(2)(C)项，Mobilitie 负责向旧金山公共卫生部门支付 210.00 美元的费用以进行审查。

请注意，此项批准和任何条件仅适用于所述的设备和安装。如果设备发生任何变化或上述有效辐射功率增加，则必须由公共卫生部门进行重新审查。

旧金山规划部条件：

1. 种植和维护适当的行道树。
2. 不可使用暴露的仪表、仪表盘或仪表底座。
3. 天线和所有设备（外部导管、无线电中继单元、用于遮盖支架螺栓的遮罩[如果需要]和安装机构）；除了标牌，如果用于屏幕，都应涂漆以与电杆相配并根据需要重新涂漆。
4. 无线电中继单元下方的布线必须在每个无线电中继单元底部与电杆上相应入口孔底部之间的距离不超过 5 英寸的情况下进入电杆。电杆入口处的导管连接应使用可用的最小接头尺寸。如果使用密封化合物，则应整齐，不得有过多的起泡，并涂漆以与电杆相配。
5. 除非政府法规要求，否则请移除高架设备标志（包括在无线电中继单元/机柜中填充制造商标志凹口）和从人行道和住宅中可能看到的设备标志。

6. 使用允许的最小射频警告标志（4 x 6 英寸）；并将警告标签朝向街道，朝向尽可能接近天线的位

置。标签在不面向附近 15 英尺内的窗户时，应面向远离街道的方向。标签的背景颜色应与立杆表面相匹配；徽标和文字应为白色。

7. 堆叠设备外壳（不包括天线）尽可能接近适用的法规和制造商设备标准许可。
8. 天线和护罩组装区域的接缝和螺栓/螺钉应以降低从人行道高度的可见度的方式进行装配和安装（例如与安装螺钉齐平）。
9. 不使用任何可视的闪烁指示灯或类似物。
10. 不妨碍任何相邻住宅窗户的景观或光线进入。
11. 如果使用新的地下围栏挖掘（拱顶），则不得损坏或去除花岗岩路缘。不得因安装在拱顶外壳盖和主要人行道材料之间产生显著的间隙。公共用地内的任何其他现有的历史建筑元素在安装期间应予以保留和保护。拱顶盖上不得放置运输公司标志或运输公司名称。
12. 应拆除非必要的无线电中继单元元件（手柄和支腿）。
13. 安装方应请规划部工作人员检查初始安装情况，以确保符合上述条件（尽管电杆所有方和公共工程部门会进行检查）。
14. 确保安装期间该市技术部门使用的 Wi-Fi 接入点和相关线路不会受到损坏（如果存在）。
15. 如果安装与上述条件不符，则应将该申请重新提交给规划部门进行进一步审查和评论。

AVISO DE APROBACIÓN TENTATIVA DE LA SOLICITUD PARA UN PERMISO DE SITIO DE INSTALACIÓN DE SERVICIO INALÁMBRICO PERSONAL

Mark Farrell
Mayor

Mohammed Nuru
Director

Jerry Sanguinetti
Manager

Street Use and Mapping
1155 Market St., 3rd floor
San Francisco, CA 94103
tel 415-554-5810

sfpublicworks.org
facebook.com/sfpublicworks
twitter.com/sfpublicworks

5/25/2018

Obras Públicas ha aprobado tentativamente la Solicitud n.º 18WR-0033 presentada por Mobilitie, LLC para un Permiso de sitio de instalación de servicio inalámbrico personal en las cercanías de 1509 Shrader St. La aprobación contiene ciertas condiciones que se adjuntan a esta carta. Estas condiciones se pueden modificar antes de la emisión de un Permiso de sitio de instalación de servicio inalámbrico personal en esta ubicación.

El equipo que se instalará en esta ubicación incluye: Una (1) antena montada en la parte superior del poste, una (1) carcasa de equipo fijada al costado del poste que aloja el relé y la radio del UE.

Si es aprobado, Mobilitie, LLC podrá instalar en esta ubicación el sitio de instalación de servicio inalámbrico personal permitido. A continuación se adjunta una simulación fotográfica del sitio de instalación de servicios inalámbricos personales propuesto.

En conformidad con el Código de Obras Públicas de San Francisco § 1513, usted tiene 20 días a partir de la última fecha de este aviso o el matasellos para protestar contra la Solicitud.

Para enviar una protesta o comentarios sobre la Solicitud, visite el sitio web de Obras Públicas en bsm.sfdpw.org, haga clic en "Comentar sobre el permiso" y escriba "18WR-0033 ", o envíe a la siguiente dirección:

San Francisco Public Works
Bureau of Street-use and Mapping
1155 Market Street
San Francisco, CA 94103
A la atención de: Protestas de permisos inalámbricos

Si se presenta una protesta oportuna, Obras Públicas llevará a cabo una audiencia pública para determinar si otorgar la Solicitud. Obras Públicas le notificará posteriormente a la fecha y hora de la audiencia.

La protesta debe basarse en uno o más de los siguientes motivos

1. El Departamento de Salud Pública determinó incorrectamente que la Solicitud cumple con el Estándar de Cumplimiento de Salud Pública (vea el Código de Obras Públicas, § 1507).

2. El Departamento de Planificación determinó incorrectamente que la Solicitud cumple con el Estándar de Compatibilidad aplicable (vea el Código de Obras Públicas, § 1509).

3. La Solicitud no cumple con ningún otro requisito para obtener un Permiso de sitio de instalación de servicio inalámbrico personal.

4. El Solicitante tiene la intención de modificar el sitio de instalación de servicio inalámbrico personal después de la emisión del Permiso de una manera que no cumple con el Estándar de Compatibilidad aplicable.

Si la ubicación propuesta para el sitio de instalación de servicios inalámbricos personales se encuentra en un distrito de zonificación comercial residencial o de barrio, su protesta puede incluir un reclamo que indique que el sitio de instalación de servicios inalámbricos personales propuesto obstruye las vistas o bloquea la luz en alguna ventana residencial adyacente. (Consulte el Código de Obras Públicas, § 1509(b)(2)). Si su protesta contiene tal reclamo,

incluya con su protesta fotografías de la posible obstrucción de las vistas o el bloqueo de la luz en sus ventanas para que el Departamento de Planificación y/o el funcionario de audiencias puedan evaluar este aspecto de su protesta. El Departamento de Planificación puede contactarlo para solicitar permiso a fin de ingresar a su residencia para investigar su reclamo. Si el Departamento de Planificación o el funcionario de audiencias están de acuerdo con sus inquietudes, la Ciudad puede agregar ciertas condiciones a la aprobación de la Solicitud para paliar esas inquietudes.

El Solicitante no sabe en este momento si presentará una Solicitud de permiso para modificar el sitio de instalación de servicio inalámbrico personal propuesto en algún momento durante el plazo del Permiso de sitio de instalación de servicio inalámbrico personal.

Para recibir correspondencia de Obras Públicas, del Solicitante y de otras partes interesadas, incluya con su protesta toda la siguiente información: dirección postal, número de teléfono diurno y dirección de correo electrónico (si está disponible).

Para obtener información y documentos adicionales sobre la Solicitud, puede contactarse con James Singleton de Mobilitie al 650-814-0564 o a JSingleton@mobilitie.com. También puede comunicarse con Obras Públicas de San Francisco al (415) 554-5343.

Para obtener más información general sobre los sitios de instalación de servicio inalámbrico personal, también puede visitar www.sf-planning.org/wireless.

Programa inalámbrico de Obras Públicas

CONDICIONES DEL PERMISO

La aprobación del Permiso de sitio de instalación de servicio inalámbrico personal propuesto ha sido recomendada por Obras Públicas de San Francisco (Oficina de Uso y Mapeo de Calles), Departamento de Salud Pública de San Francisco, Departamento de Planificación de San Francisco.

La aprobación tentativa incluye las siguientes condiciones que han sido aceptadas por el Solicitante:

Condiciones de Obras Públicas de San Francisco:

1. Esta recomendación no se basa en ninguna variación de los dibujos representados y/o la simulación fotográfica; si una variación es diferente, se requiere una nueva presentación. En caso de que la instalación varíe con respecto a dichas condiciones, debe volver a enviarse al/los Departamentos para su posterior revisión y comentarios.
2. Nuevos postes: no se deben erigir nuevos postes ni colocarlos en distritos subterráneos.
3. Tirantes: Siga todos los códigos de excavación para obtener los permisos necesarios para la colocación de tirantes. Los tirantes evitarán cruzar áreas conflictivas, como entradas de vehículos, rampas de acera.
4. Cumplir con los requisitos del código ADA para las leyes federales, estatales y locales. Asegurarse de que la ruta de ancho libre mínimo requerido para la ruta de acceso sea de cuatro pies.
5. Al finalizar la obra, proporcionar un conjunto de fotos de la construcción terminada del sitio de instalación a la Oficina de Permisos de Uso y Mapeo de Calles.
6. Mantener una certificación válida de seguro anualmente y reenviar una copia a la Oficina de Permisos de Uso y Mapeo de Calles.

Condiciones del Departamento de Salud Pública de San Francisco:

- Asegúrese de que cualquier equipo asociado con la instalación de esta antena no produzca un ruido superior a 45 dBA medidos a tres (3) pies de la fachada del edificio residencial más cercano.

- Asegúrese de que no haya áreas ocupadas públicamente a dos y medio (2,50) pies de la cara de la antena.

- Una vez instalada la antena, Mobilitie debe tomar mediciones de densidad de potencia de RF con la antena operando a plena potencia para verificar el nivel reportado en el informe de Hammett y Edison y para garantizar que el nivel de exposición pública de la FCC no se exceda en ningún área públicamente accesible. Esta medición debe tomarse nuevamente al momento de la renovación del permiso.

- Mobilitie debe ser consciente de que el público en general puede tener dudas sobre la antena y la posible fuente de RF cerca de sus viviendas. Mobilitie debe tener un procedimiento para tomar los niveles de densidad de potencia de RF en las viviendas cercanas cuando así lo soliciten los miembros del público en general.

- De conformidad con el Código de Obras Públicas de San Francisco, art. 25, Sec. 1527 (a)(2)(C), Mobilitie es responsable de pagar una tarifa de $210,00 al Departamento de Salud Pública de San Francisco para esta revisión.

Tenga en cuenta que esta aprobación y todas las condiciones se aplican solo al equipo y la instalación tal como se describe. Si se realizan cambios en el equipo o hay un aumento en la potencia radiada efectiva descrita anteriormente, se debe realizar una nueva revisión por parte del Departamento de Salud Pública.

Condiciones del Departamento de Planificación de San Francisco:

1. Plante y mantenga un árbol callejero apropiado.
2. No se puede usar ningún medidor expuesto, bandeja de medición o pedestal de medidor.
3. La antena y todo el equipo (conducto externo, unidades de relé de radio, anteojeras utilizadas para proteger los pernos del soporte [si es necesario] y mecanismos de montaje), excepto la señalización, si se usa para el cribado, se pintarán para que coincidan con el poste y se repintarán según sea necesario.
4. El cableado debajo de las unidades de relé de radio debe ingresar al poste con un espacio de no más de cinco pulgadas entre la parte inferior de cada unidad de relé de radio y la parte inferior del orificio de entrada correspondiente en el poste. La conexión del conducto en los puntos de entrada del poste deberá utilizar los tamaños de conexión más pequeños disponibles. Los compuestos de sellado, si se utilizan, deben estar ordenados, sin exceso de burbujas, y pintados a tono con el poste.
5. Retire la señalización del equipo elevado (incluido el rellenado de las marcas del logotipo del fabricante en las unidades/armarios de relé de radio) y las calcomanías de los equipos que puedan verse desde la acera y las viviendas, a menos que lo exija la normativa gubernamental.

6. Utilice la señalización de advertencia de RF más pequeña permitida (4 x 6 pulgadas); y coloque la pegatina de advertencia mirando hacia la calle, en un lugar lo más cercano posible a la antena. La pegatina estará orientada en sentido contrario a la calle, cuando no esté orientada frente a una ventana a 15 pies o menos de distancia. El color de fondo de la pegatina debe coincidir con la superficie de montaje del poste; y el logo y el texto deben ser blancos.
7. Apile los recintos de los equipos (sin incluir la antena) lo más cerca que permita la normativa aplicable y los estándares del equipo del fabricante.
8. Las costuras y pernos/tornillos en el área de montaje de la antena y la cubierta se deben fabricar e instalar de manera tal que reduzca su visibilidad (por ejemplo, tornillos de montaje a ras) desde el nivel de la acera.
9. No utilice luces indicadoras intermitentes visibles o similares.
10. No obstruya la vista desde, ni la luz en ninguna ventana residencial adyacente.
11. Las nuevas excavaciones de cubierta subterránea (bóveda), si se utilizan, no deberán dañar ni eliminar los bordillos de granito. No se generarán espacios significativos entre la tapa de la caja de la bóveda y el material de la acera principal debido a la instalación. Cualquier otro elemento arquitectónico histórico existente dentro del derecho de paso público deberá conservarse y protegerse durante la instalación. No se puede colocar el logotipo o nombre del transportista en la tapa de la bóveda.
12. Los elementos de la unidad de relé de radio no esenciales (asa y patas) deben quitarse.
13. El instalador hará los arreglos necesarios para que el personal del Departamento de Planificación revise la instalación inicial, a fin de garantizar el cumplimiento de las condiciones antes mencionadas (sin perjuicio de las inspecciones del propietario del poste y del Departamento de Obras Públicas).
14. Asegúrese de que los puntos de acceso wifi y el cableado asociado, utilizados por el Departamento de Tecnología de la ciudad, no sufran daños durante la instalación (si están presentes).
15. En caso de que la instalación varíe con respecto a dichas condiciones, la solicitud se volverá a enviar al Departamento de Planificación para su posterior revisión y comentarios.

PAUNAWA SA PANSAMANTALANG PAG-APRUBA NG APLIKASYON PARA SA PERSONAL WIRELESS SERVICE FACILITY SITE PERMIT

Mark Farrell
Mayor

Mohammed Nuru
Director

Jerry Sanguinetti
Manager

Street Use and Mapping
1155 Market St., 3rd floor
San Francisco, CA 94103
tel 415-554-5810

sfpublicworks.org
facebook.com/sfpublicworks
twitter.com/sfpublicworks

5/25/2018

Pansamantalang inaprubahan ng Public Works ang Aplikasyon Blg. 18WR-0033 na isinumite ng Mobilitie, LLC para sa isang Personal Wireless Service Facility Site Permit sa paligid ng 1509 Shrader St. Ang pag-apruba ay naglalaman ng ilang mga kondisyon na nakalakip sa liham na ito. Ang mga kondisyong ito ay maaaring mabago bago ang pagpapalabas ng Personal Wireless Service Facility Site Permit sa lugar na ito.

Ang kagamitan na mai-install sa lugar na ito ay kinabibilangan ng: Isang (1) antenna na naka-mount sa tuktok ng poste, isang (1) bakod ng kagamitan na nakakabit sa tagiliran ng poste kung saan nakalagay ang UE Relay at radyo.

Kung maaaprubahan, maaaring i-install ng Mobilitie, LLC ang pinahihintulutang Personal Wireless Service Facility sa lokasyong ito. Isang litratong simulation ng ipinapanukalang Personal Wireless Service Facility ang nakalakip dito.

Alinsunod sa San Francisco Public Works Code § 1513, mayroon kang 20 araw mula sa mas nahuhuli sa petsa sa paunawang ito o ang marka sa koreo upang iprotesta ang Aplikasyon.

Upang magsumite ng isang protesta sa/o mga komento sa Aplikasyon, mangyaring bisitahin ang website ng Public Works sa sumusunod na address: bsm.sfdpw.org at i-klik ang "Magkomento sa Permit" at ipasok ang "18WR-0033 " o ipadala sa sumusunod na address:

San Francisco Public Works
Bureau of Street-use and Mapping
1155 Market Street
San Francisco, CA 94103
Attn: Wireless Permit Protests

Kung may isusumiteng protesta sa takdang panahon, magdaraos ang Public Works ng pampublikong pagdinig upang magpasya kung aaprubahan ang Aplikasyon. Aabisuhan ka ng Public Works sa ibang araw tungkol sa petsa at oras para sa pagdinig.

Ang protesta ay kailangang batay sa isa o higit pa sa mga sumusunod na dahilan

1. Mali ang pagpapasiya ng Kagawaran ng Pampublikong Kalusugan na ang Aplikasyon ay sumusunod sa Pamantayan sa Pagsunod sa Pampublikong Kalusugan (tingnan ang Public Works Code § 1507).

2. Mali ang pagpapasiya ng Kagawaran ng Pagpaplano na ang Aplikasyon ay tumutugon sa naaangkop na Pamantayan ng Pagkakabagay (tingnan ang Public Works Code § 1509).

3. Ang Aplikasyon ay hindi sumusunod sa anumang iba pang kinakailangan para sa pagkuha ng isang Personal Wireless Service Facility Site Permit.

4. Binabalak baguhin ng aplikante ang Personal Wireless Service Facility pagkatapos na maibigay ang Permit sa paraang hindi tumutupad sa naaangkop na Pamantayan ng Pagkakabagay.

Kung ang ipinapanukalang lokasyon para sa Personal Wireless Service Facility ay nasa isang zoning district na pangresidensya o pangkomersyo sa kapitbahayan, maaaring isama sa iyong protesta ang claim na ang iminumungkahing Personal Wireless Service Facility ay makakaharang ng tanawin mula sa o ng liwanag papunta

sa anumang katabing mga bintana ng tirahan. (Tingnan ang Public Works Code § 1509(b)(2).) Kung naglalaman ang iyong protesta ng ganoong claim, pakisama sa iyong protesta ang mga litrato na naglalarawan sa mga posibleng makakaharang ng mga tanawin mula sa o liwanag sa iyong mga bintana upang mapag-aralan ng Kagawaran ng Pagpaplano at/o opisyal ng pagdinig ang aspetong ito ng iyong protesta. Maaaring makipag-ugnayan sa iyo ang Kagawaran ng Pagpaplano upang humingi ng pahintulot na pumasok sa iyong tirahan para siyasatin ang iyong claim. Kung sumasang-ayon ang Kagawaran ng Pagpaplano o opisyal ng pagdinig sa iyong mga ipinag-aalala, maaaring magdagdag ang Lungsod ng ilang mga kondisyon sa pag-apruba nito sa Aplikasyon upang mapagaan ang mga pag-aalalang iyon.

Hindi alam ng Aplikante sa oras na ito kung ito ay maghahain ng isang Aplikasyon para sa isang permit na baguhin ang ipinapanukalang Personal Wireless Service Facility sa anumang oras sa panahon ng termino ng Personal Wireless Service Facility Site Permit.

Upang makatanggap ng mga liham mula sa Public Works, Aplikante, at iba pang mga interesadong partido mangyaring isama sa iyong protesta ang lahat ng sumusunod na impormasyon: Address ng kalye, numero ng telepono sa araw, at email address (kung mayroon).

Upang makakuha ng karagdagang impormasyon at mga dokumento tungkol sa Aplikasyon, maaari kang makipag-ugnay kay James Singleton ng Mobilitie sa 650-814-0564 o JSingleton@mobilitie.com . Maaari mo ring kontakin ang SF Public Works sa (415) 554-5343.

Para sa higit pang impormasyon tungkol sa Personal Wireless Service Facilities sa kalahatan maaari mo ring bisitahin ang www.sf-planning.org/wireless.

Public Works Wireless Program

MGA KONDISYON NG PERMIT

Inirerekomenda ng San Francisco Public Works (Bureau of Street-Use and Mapping), San Francisco Department of Public Health, San Francisco Planning Department ang pag-apruba sa ipinapanukalang Personal Wireless Service Facility Site Permit.

Kasama sa pansamantalang pag-apruba ang sumusunod na (mga) kondisyon na tinanggap ng Aplikante:

Mga Kondisyon ng San Francisco Public Works:

1. Ang rekomendasyong ito ay batay sa kondisyong walang kaibhan (variation) mula sa mga ipinakitang guhit at/o litratong simulation; kung ang isang kaibhan ay naiiba kinakailangan ang muling pagsusumite. Kung iba ang pag-install mula sa mga naturang kondisyon, dapat itong muling isumite sa (mga) Kagawaran para sa karagdagang pagsusuri at komento
2. Mga Bagong Poste: walang bagong poste ang itatayo o ilalagay sa mga distritong nasa ilalim ng lupa.
3. Down Guys: Sundin ang lahat ng code sa paghuhukay upang makuha ang mga kinakailangang permit para sa paglalagay ng down guys. Dapat iwasang tawirin ng down guys ang magkakasalungat na lugar ngunit hindi limitado sa mga daanan ng sasakyan, mga rampa ng kurbada.
4. Sumunod sa mga kinakailangan ng ADA code para sa Federal, Estado, mga lokal na batas. Tiyakin na ang daan ng pinakamababang kinakailangang lapad ng espasyo para sa daraanan ay apat na talampakan.
5. Sa pagtatapos ng trabaho, magbigay ng isang grupo ng mga litrato ng naitayo nang installation sa Bureau Street Use & Mapping Permit Office.
6. Panatilihin ang isang balidong sertipikasyon ng seguro taun-taon at magsumite ng isang kopya sa Bureau Street Use & Mapping Permit Office.

Mga Kondisyon ng Kagawaran ng Pampublikong Kalusugan ng San Francisco:

- Tiyakin na ang anumang mga kagamitan na nauugnay sa pag-install ng poste ng antenna na ito ay hindi gumagawa ng ingay na lampas sa 45 dBA na nasusukat sa tatlong (3) talampakan mula sa pinakamalapit na harapan ng gusaling tirahan.

- Tiyakin na walang mga lugar na okupado ng publiko sa loob ng dalawa at kalahating (2.50) talampakan mula sa mukha ng antenna.

- Sa sandaling ma-install na ang antenna, kailangang sukatin ng Mobilitie ang RF power density habang gumagana ang antenna sa sukdulang lakas upang beripikahin ang antas na iniulat sa Hammett and Edison report at upang matiyak na ang antas ng pagkakalantad ng publiko ayon sa FCC ay hindi nalalampasan sa anumang lugar na naa-access ng publiko. Ang pagsukat na ito ay kailangang gawin muli sa panahon ng pag-renew ng permit.

- Dapat malaman ng Mobilitie na maaaring may mga ipinag-aalala ang kalahatang publiko tungkol sa antenna at posibleng pagmumulan ng RF na malapit sa kanilang mga tirahan. Dapat ay may pamamaraan ang Mobilitie sa pagkuha ng mga antas ng density ng lakas ng RF sa mga kalapit na tirahan kapag hiniling ng mga miyembro ng kalahatang publiko.

- Alinsunod sa San Francisco Public Works Code, Art. 25, Sec. 1527 (a)(2)(C) ang Mobilitie ay may pananagutang magbayad ng $ 210.00 sa Kagawaran ng Pampublikong Kalusugan ng San Francisco para sa pagsusuring ito.

Mangyaring tandaan na ang pag-aprubang ito at anumang mga kondisyon ay nalalapat lamang sa kagamitan at installation tulad ng inilarawan. Kung may gagawing anumang mga pagbabago sa kagamitan o anumang pagtaas sa epektibong radiated power na

inilarawan sa itaas, isang bagong pagsusuri ng Kagawaran ng Pampublikong Kalusugan ang kailangang isagawa.

Mga Kondisyon ng Kagawaran ng Pagpaplano ng San Francisco:

1. Magtanim at magpanatili ang naaangkop na puno sa kalye.
2. Walang nakalantad na meter, meter pan o meter pedestal ang maaaring gamitin.
3. Ang antenna, at lahat ng mga kagamitan (panlabas na tubo, mga relay unit ng radyo, mga blinder na ginamit upang balutin ang mga bracket bolt [kung kinakailangan], at mga mekanismo ng pag-mount); maliban sa signage, kung gagamitin para sa screening, ay pipinturahan lahat upang tumugma sa poste at muling pipinturahan kung kinakailangan.
4. Ang kable sa ilalim ng mga relay unit ng radyo ay dapat pumasok sa poste nang hindi hihigit sa limang-pulgada ang puwang sa pagitan ng ilalim ng bawat relay unit ng radyo at sa ilalim ng kaukulang butas ng pagpasok sa poste. Ang koneksyon sa tubo sa mga entry point ng poste ay dapat gumamit ng pinakamaliit na sukat na makukuha. Ang mga sealing compound, kung ginagamit, ay dapat malinis na walang labis na bulubok at pininturahan upang tumugma sa poste.
5. Alisin ang nakaangat na signage ng kagamitan (kabilang ang mga nakabaon na marka ng logo ng tagagawa sa mga relay unit/cabinet ng radio) at equipment decal na maaaring nakikita mula sa bangketa at tirahan, maliban kung ipinag-uutos ng regulasyon ng pamahalaan.
6. Gamitin ang pinakamaliit na RF warning signage na pinapayagan (4 x 6 na pulgada); at ilagay ang sticker ng babala na nakaharap sa kalye, sa isang lokasyong pinakamalapit sa antenna hanggat maaari. Dapat nakaturo ang sticker palayo sa kalye, kapag hindi nakaharap sa isang kalapit na bintana sa loob ng 15 talampakan. Ang kulay ng background ng sticker ay dapat tumugma sa ibabaw kung saan naka-mount ang poste; at ang logo at teksto ay dapat na puti.
7. Itabi ang mga bakod ng kagamitan (hindi kasama ang antenna) sa pinakamalapit na pinahihintulutan ng mga naaangkop na regulasyon at mga pamantayan sa kagamitan ng tagagawa.
8. Ang mga gilid at bolt/screw sa antenna at shroud assembly area ay dapat na gawin at mai-install sa paraang hindi gaanong nakikita ang mga ito (hal. flush mounting screws) mula sa bangketa.
9. Huwag gumamit ng anumang nakikitang mga ilaw na kumikislap-kislap o katulad nito.
10. Huwag harangan ang tanawin mula sa, o ang ilaw sa katabing bintana ng tirahan.
11. Kung gagamit ng bagong mga paghukay ng bakod (vault) sa ilalim ng lupa, hindi dapat ito makapinsala o magtanggal ng mga granite sa kurbada. Walang malalaking puwang ang dapat na malikha sa pagitan ng vault enclosure lid at materyal ng pangunahing bangketa sanhi ng pag-install. Ang anumang iba pang mga kasalukuyang makasaysayang elemento ng arkitektura sa loob ng pampublikong karapatan sa daan ay mananatili at poprotektahan sa panahon ng pag-install. Walang logo ng carrier o pangalan ng carrier ang maaaring ilagay sa takip ng vault.
12. Ang mga hindi kinakailangang elemento ng relay unit ng radyo (hawakan at binti) ay aalisin.
13. Dapat asikasuhin ng taga-install na masuri ng tauhan ng Kagawaran ng Pagpaplano ang paunang pag-install, upang masigurong sinusunod ang mga naunang nabanggit na kondisyon (sa kabila ng mga pag-iinspeksyon ng may-ari ng poste at Department of Public Works).
14. Tiyakin na ang Mga Wi-Fi Access Point at kaugnay na mga kable, na ginagamit ng Kagawaran ng Teknolohiya ng Lunsod, ay hindi napinsala sa panahon ng pag-install (kung mayroon).
15. Kung naiiba ang pag-install mula sa mga nasabing kondisyon, ang aplikasyon ay dapat muling isumite sa Kagawaran ng Pagpaplano para sa karagdagang pagsusuri at komento.

EXHIBIT H

[Declaration for Posting Notice of Final Approval attached behind this page (26 pages).]

Exhibit H

STATE OF CALIFORNIA)
) ss.
COUNTY OF SAN FRANCISCO)

DECLARATION OF POSTING RE: POSTING OF NOTICE OF FINAL DETERMINATION OF APPLICATION FOR A PERSONAL WIRELESS SERVICE FACILITY SITE PERMIT

I, **[James Singleton]** do hereby declare as follows:

1. I am a **Permitting Manager** at Mobilitie LLC. I am over 18 years of age and I am a resident of Marin County, State of California.

2. On **[9/17/2018]** Mobilitie LLC. caused to be posted a copy of the "Final Determination of Personal Wireless Service Facility Site Permit" for **Permit [18WR-0033]** to utility poles located along the block face upon which the Personal Wireless Service Facility is located. Location posted in compliance with Public Works Code 1512(b)(2).

I declare under penalty of perjury under the laws of the State of California that the foregoing is true and correct.

Executed **9/17/2018** at County of San Francisco, California.

By: James Singleton

[James Singleton]

18WR-0033

1509 Shrader St

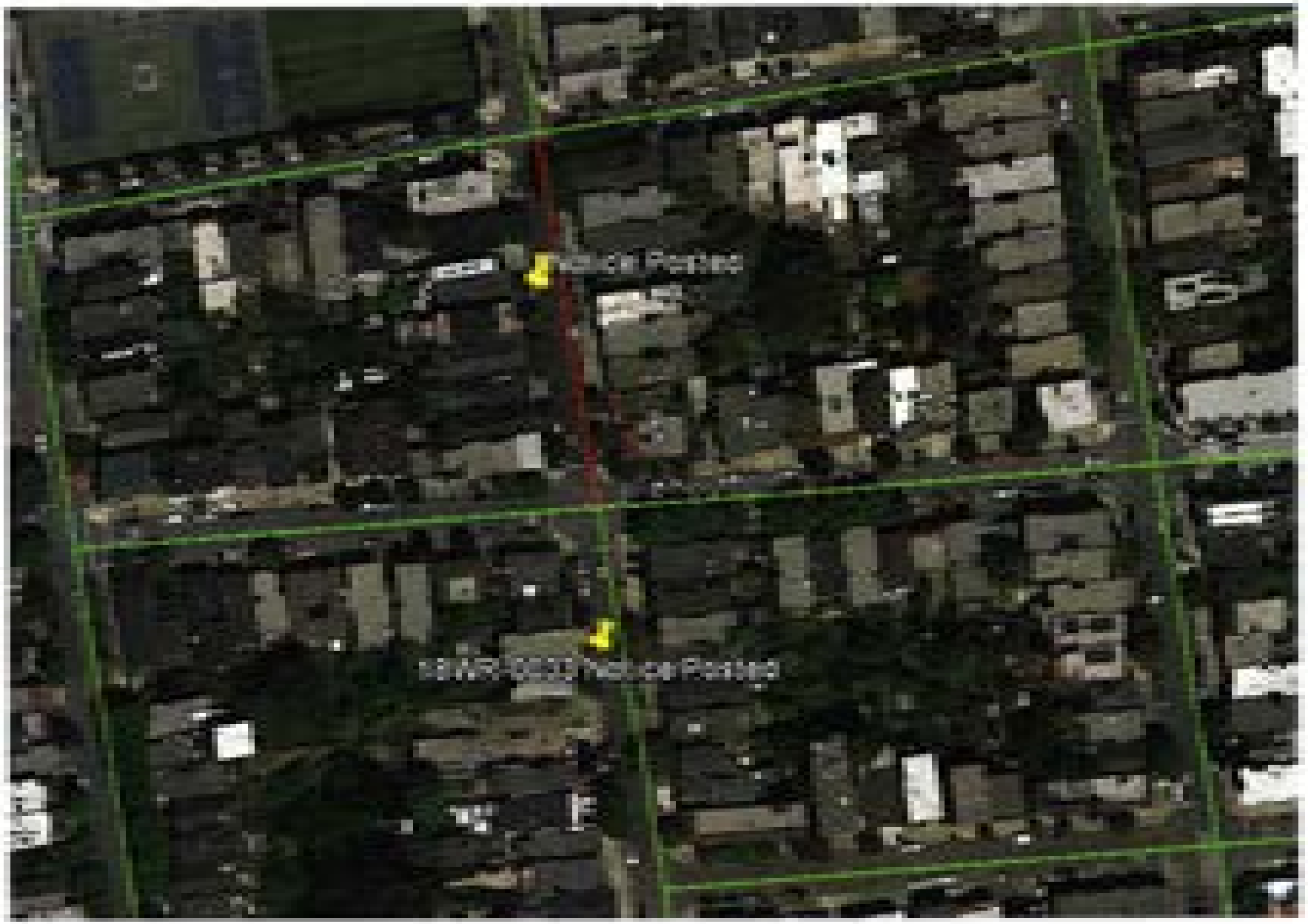
Police Postes
Police Postes


NOTICE OF FINAL DETERMINATION
PERSONAL WIRELESS SER

PROVE
CE FAC ITY SITE PERMIT

nced Application submitt
Permit in the vicinity of 1509 Sh

(1) antenna, one (1) equipme
proved Personal Wire

Application for a permit to modi
during the term of the Personal

the Application satisfied the

has approved the

the permit with conditions

NOTICE OF FINAL DETERMINATION TO APPROVE A PERSONAL WIRELESS SERVICE FACILITY SITE PERMIT

London N. Breed
Mayor

Mohammed Nuru
Director

Jerry Sanguinetti
Manager

Street Use and Mapping
1155 Market St., 3rd floor
San Francisco, CA 94103
tel 415-554-5810

sfpublicworks.org
facebook.com/sfpublicworks
twitter.com/sfpublicworks

Date: 9/13/2018

Application No.: **18WR-0033**
Applicant Name: **Mobilitie, LLC**
Location: **1509 Shrader Street**

San Francisco Public Works has finally approved the above-referenced Application submitted by **Mobilitie, LLC** for a Personal Wireless Service Facility Site Permit in the vicinity of **1509 Shrader Street**.

The equipment to be installed at this location include: One (1) antenna, one (1) equipment enclosure housing UE Relay and radio. A photo-simulation of the approved Personal Wireless Service Facility is attached hereto.

The Applicant does not know at this time whether it will file an Application for a permit to modify the proposed Personal Wireless Service Facility at any time during the term of the Personal Wireless Service Facility Site Permit.

Each of the following City departments made a determination that the Application satisfied the applicable requirements of the Public Works Code:

1. San Francisco Public Works/ Bureau of Street Use and Mapping has approved the permit with conditions.
2. San Francisco Department of Public Health has approved the permit with conditions.
3. San Francisco Planning Department has approved the permit with conditions.

The final approval includes the following condition(s):

San Francisco Public Works Conditions:

1. This recommendation is based on no variation from the depicted drawings and/or photo simulation; if a variation is different a re-submittal is required. Should the installation vary from said conditions, it should be resubmitted to Department(s) for further review and comment
2. New Poles: no new poles shall be erected or placed in underground districts.
3. Down Guys: Follow all excavation codes to obtain the necessary permits for placement of down guys. Down guy shall avoid crossing conflicting areas but not limited to driveways, curb ramps.
4. Comply with ADA code requirements for Federal, State, local laws. Make sure path of minimum required clear width for accessible path of travel is four feet.
5. At the conclusion of the work, provide a set of as built photos of the installation to the Bureau Street Use & Mapping Permit Office.
6. Maintain a valid certification of insurance annually and forward a copy to the Bureau Street Use & Mapping Permit Office.

San Francisco Department of Public Health Conditions:

1. Ensure that any equipment associated with the pole installation of this antenna does not produce a noise in excess of 45 dBA as measured at three (3) feet from the nearest residential building façade.
2. Ensure that there are no publicly occupied areas within two and a half (2.50) feet from the face of the antenna.
3. Once the antenna is installed, Mobilitie must take RF power density measurements with the antenna operating at full power to verify the level reported in the Hammett and Edison report and to ensure that the FCC public exposure level is not exceeded in any publicly accessible area. This measurement must be taken again at the time of the permit renewal.
4. Mobilitie should be aware that the general public may have concerns about the antenna and potential RF source near their dwellings. Mobilitie should have in place a procedure for taking RF power density levels in nearby dwellings when requested by the members of the general public.
5. In accordance with the San Francisco Public Works Code, Art. 25, Sec. 1527 (a)(2)(C) Mobilitie is responsible for paying a fee of $210.00 to the San Francisco Department of Public Health for this review.

Please note that this approval and any conditions apply only to the equipment and installation as described. If any changes in the equipment or any increase in the effective radiated power described above are made, a new review by the Department of Public Health must be conducted.

San Francisco Planning Department Conditions:

1. Plant and maintain an appropriate street tree.
2. No exposed meter, meter pan or meter pedestal may be used.
3. Antenna, and all equipment (external conduit, radio relay units, blinders used to shroud bracket bolts [if needed], and mounting mechanisms); except signage, if used for screening, shall all be painted to match the pole and repainted as needed.
4. Cabling below radio relay units shall enter the pole with no more than a five-inch gap between bottom of each radio relay unit and the bottom of the corresponding entry hole on the pole. Conduit connection at pole entry points shall utilize the smallest fitting sizes available. Sealing compounds, if utilized, shall be tidy without excess bubbling and painted to match pole.
5. Remove raised equipment signage (including filling in manufacturer logo indentations on radio relay units/cabinets) and equipment decals that may be visible from sidewalk and dwellings, unless required by government regulation.
6. Utilize smallest RF warning signage allowed (4 x 6 inches); and place the warning sticker facing out toward street, at a location as close to antenna as is feasible. Sticker shall face away from street, when not facing a nearby window within 15 feet. Background color of sticker shall match the pole-mounting surface; and logo and text shall be white.

7. Stack equipment enclosures (not including antenna) as close as allowed by applicable regulation and manufacturer equipment standards.
8. Seams and bolts/screws at antenna and shroud assembly area shall be fabricated and installed in a manner so as to reduce their visibility (e.g. flush mounting screws) from sidewalk level.
9. Not utilize any visible flashing indicator lights or similar.
10. Not obstruct the view from, or the light into any adjacent residential window.
11. New below ground enclosure excavations (vault), if utilized, shall not damage or remove granite curbs. No significant gaps shall be created between vault enclosure lid and primary sidewalk material due to installation. Any other existing historic architectural elements within the public right-of-way shall be retained and protected during installation. No carrier logo or carrier name may be placed on the vault lid.
12. Non-essential radio relay unit elements (handle and legs) shall be removed.
13. The installer shall arrange to have Planning Department staff review the initial installation, in order to ensure compliance with the aforementioned conditions (notwithstanding inspections by pole owner and Department of Public Works).
14. Ensure Wi-Fi Access Points and associated wiring, utilized by the City's Department of Technology, are not damaged during installation (if present).
15. Should the installation vary from said conditions, the application shall be resubmitted to the Planning Department for further review and comment.

Within fifteen (15) calendar days of the mailing and posting of this notice, any person may appeal the issuance of this permit to the Board of Appeals. Appeals must be filed in person by either the appellant or the appellant's agent. Generally, the Board of Appeals requires that an appointment be made to file an appeal. For further information regarding the appeal process, or to schedule an appointment, please contact the Board of Appeals in person at 1650 Mission Street, Suite 304 or call 415-575-6880.

An appeal must be based on one or more of the following grounds:

1. The Department of Public Health incorrectly determined that the Application complies with the Public Health Compliance Standard (Public Works Code § 1507(b)).
2. The Planning Department incorrectly determined that the Application meets the applicable Tier Compatibility Standard (Public Works Code § (1509(b)).
3. The Application does not comply with any other requirement for obtaining a Personal Wireless Service Facility Site Permit.
4. The Applicant intends to modify the Personal Wireless Service Facility after the permit is issued in a manner that would not comply with the applicable Compatibility Standard.

To obtain additional information concerning the Application and final approval you may contact James Singleton of Mobilitie at 650-814-0564 or JSingleton@mobilitie.com. You may also contact San Francisco Public Works at 415-554-5343.

Public Works Wireless Program

view from Shrader Street looking northwest at site

mobilitie

[redacted] S [redacted] B
Adjacent [redacted] S [redacted] Francisco, CA
Photosims Produced on 2-6-2018

Existing

Proposed

AdvanceSim
Photo Simulation Solution
Contact (925) 202-8507

view from Shrader Street looking south at site

9CAB007733 / SF90XS701B
Adjacent to 1509 Sh[illegible]t, San Francisco, CA
Photosims P[illegible]n 2-6-2018

AdvanceSi[illegible]
Photo Simulation Solut[illegible]
Contact (925) 202-8507

关于批准个人无线服务机房许可证的最终决定通知

London N. Breed
Mayor

Mohammed Nuru
Director

Jerry Sanguinetti
Manager

Street Use and Mapping
1155 Market St., 3rd floor
San Francisco, CA 94103
tel 415-554-5810

sfpublicworks.org
facebook.com/sfpublicworks
twitter.com/sfpublicworks

日期：9/13/2018

申请编号：18WR-0033
申请人名称：Mobilitie，LLC
地点：1509 Shrader St

旧金山公共工程署最终批准了 Mobilitie, LLC. 关于在第 Shrader 大街 1509 号附近建设一个个人无线服务设施站点的申请。

将于该地点安装的设备包括：一(1)根天线（安装在电杆顶部）和一(1)个固定在电杆外侧用于遮蔽 UE 继电器和无线电装置的设备外壳。 本函随附已经批准的个人无线服务设施的一张模拟照片。

申请人此时不知道在此个人无线服务机房许可期限内是否会提出关于修改本个人无线服务设施的申请。

以下每个市政部门已作出决定，该申请符合《公共工程规章》的相关要求：

1. 旧金山公共工程署/街道使用和测绘局（San Francisco Public Works/ Bureau of Street Use and Mapping ）已有条件批准该许可证。
2. 旧金山公共卫生署（San Francisco Department of Public Health）已有条件批准该许可证。
3. 旧金山规划署（San Francisco Planning Department ）已有条件批准该许可证。

最终批准包括以下条件：

旧金山公共工程署条件：

1. 本建议的前提是，不得与所绘图纸和/或模拟照片存在任何差异；如有变更，则需要重新提交申请。 如果实际安装与上述情况不符，则应重新提交给各部门作进一步详细审查和批复
2. 新电杆：不应在地面以下区域竖立或放置任何新的电杆。
3. 地锚拉线：遵循所有的挖掘规章，以取得安装地锚拉线的必要许可。 地锚拉线应避免穿越交会区域，但不限于车道、路边坡道。
4. 遵守联邦、各州和地方法律的 ADA 规章法规要求。 确保可进出通道的最小规定净宽度为四英尺。
5. 施工结束后，应向街道使用和测绘局许可证办公室（Bureau Street Use & Mapping Permit Office）提供一组现场安装竣工照片。
6. 每年皆应保持一份有效的保险凭证，并将副本转发给街道使用和测绘局许可证办公室。

旧金山公共卫生署条件：

- 确保与此天线的电杆安装相关的任何设备在离最近的住宅建筑立面三(3)英尺处测得的噪音不超过 45 dBA。
- 确保距离天线表面二点五(2.50)英尺范围内，没有公用区域。
- 一旦安装了天线，Mobilitie 必须在天线以全功率工作的情况下进行射频 (RF) 功率密度测量，以验证 Hammett 和 Edison 报告中报告的电平，并确保在任何公众可接触的区域都不会超过 FCC 公共空间暴露限制值。 在换领许可证时，必须再次进行此项测量。
- Mobilitie 应该意识到，公众可能对自身住宅附近的天线和潜在的射频源感到担忧。 在公众要求的情况下，Mobilitie 应制定出台在附近住宅进行射频功率密度水平测量的规程。
- 根据旧金山公共工程署规章 第 25 条 第 1527 (a)(2)(C)项，Mobilitie 负责向旧金山公共卫生署支付 210.00 美元的审查费用。

请注意，此项批准和任何条件仅适用于所涉及的设备和安装。 如果设备发生任何变更或增加上述有效辐射功率，则必须由公共卫生署实施重新审查。

旧金山规划署条件：

1. 种植和维护适当的行道树。
2. 不可使用任何外露的计量器、计量盘或计量底座。

3. 天线，以及除标牌之外的任何用来遮蔽的所有设备（外部导线、无线电中继系统、用于遮盖托架螺栓的遮罩[如果需要]和安装设施），都应涂上与电杆相配的油漆，或根据需要重新涂漆。
4. 无线电中继系统下方的布线必须在每个无线电中继系统底部与电杆上相应入口孔底部之间的距离不超过 5 英寸的情况下埋入电杆内。 电杆入口处的导线连接应采用尽可能小的接头尺寸。 如果使用密封胶，则应整齐，不得有过多的起泡，并涂漆以与电杆相配。
5. 除非政府法规要求，否则请拆除从人行道和住宅中可能看到的高架设备标志和设备贴纸（包括在无线电中继系统/机柜中的制造商标志凹口内的填充物）。
6. 使用允许的最小射频警告标志（4 x 6 英寸），并将警告标识贴纸朝向街道，贴在尽可能接近天线的位置。 贴纸

   应面朝街道，但不面朝 15 英尺范围内的窗户。 贴纸的背景颜色应与立杆表面相匹配，徽标和文字应为白色。
7. 应在适用的法规和制造商设备标准许可范围内，尽可能紧密围住叠架设备外壳（不包括天线）。
8. 对于天线和护罩组装区域的接缝和螺栓/螺钉，在焊接和安装时应尽可能减少面向行人道的可见度（例如齐平式安装螺丝）。
9. 不使用任何明显的闪光指示灯或类似设备。
10. 不妨碍任何相邻住宅窗户的视线或阻挡该等窗户的光线。
11. 如果使用新的地下围栏挖掘（圆拱），则不得损坏或去除花岗岩路缘。 不得因安装设备，在圆拱机箱盖和主要人行道材料之间形成巨大空隙。 公共道路用地内的任何其他现有历史建筑应在安装期间加以保留和保护。 圆拱盖上不得标示任何运输公司标识或运输公司名称。
12. 应拆除非必要的无线电中继系统元件（把手和支腿）。
13. 安装人员应安排规划部门的工作人员检查初步安装作业情况，以确保符合上述所有条件（不论是由电杆所有方或公共工程署进行检查）。
14. 确保城市技术部门使用的 Wi-Fi 接入点和相关线路
    在安装过程中不会受损（如果有）。
15. 如果安装与上述情况不符，则应将该申请重新提交给规划署，进行进一步审查和评估。

在本通知邮寄和发布后十五（15）个日历日内，任何人都可以向上诉委员会就本许可证的发放提出上诉。 申诉必须由上诉人或上诉人的代理人亲自提出。 一般来说，须与上诉委员会安排预约，方能提出上诉。 有关上诉程序的进一步信息，或安排预约时间，请亲自前往位于 1650 Mission Street, Suite 304 的上诉委员会或致电 415-575-6880 联系。

上诉必须以下列一或多个理由为立论基础：

1. 公共卫生署错误判定该申请符合公共健康合规标准（参见公共工程规章§1507）。
2. 规划部门错误地判定该申请符合适用的兼容性标准（参见公共工程规章§1509）。
3. 申请不符合任何其他获得个人无线服务设施场所许可证的要求。
4. 申请人试图在许可证签发后，以不符合适用的兼容性标准的方式修改个人无线服务设施。

有关申请和最终批准的更多信息，请联系
Mobilitie 的 James Singleton， 电话 650-814-0564 或电邮 JSingleton@mobilitie.com 。 您也可拨打
415-554-5343，与旧金山公共工程署联系。

公共工程无线项目

AVISO DE DETERMINACIÓN FINAL PARA APROBAR UN PERMISO DE SITIO DE INSTALACIÓN DE SERVICIO INALÁMBRICO PERSONAL

London N. Breed
Mayor

Mohammed Nuru
Director

Jerry Sanguinetti
Manager

Street Use and Mapping
1155 Market St., 3rd floor
San Francisco, CA 94103
tel 415-554-5810

sfpublicworks.org
facebook.com/sfpublicworks
twitter.com/sfpublicworks

Fecha: 9/13/2018

Solicitud número: 18WR-0033
Nombre del solicitante: Mobilitie, LLC
Ubicación: 1509 Shrader St

Obras Públicas de San Francisco finalmente ha aprobado la Solicitud mencionada anteriormente, presentada por Mobilitie, LLC, para un Permiso de sitio de instalación de servicio inalámbrico personal en las proximidades de 1509 Shrader St.

El equipo que se instalará en esta ubicación incluye: una (1) antena montada en la parte superior del poste, una (1) carcasa de equipo fijada al costado del poste que aloja el relé y la radio del UE. A continuación se adjunta una simulación fotográfica de la instalación de servicios inalámbricos personales propuesta.

El Solicitante no sabe en este momento si presentará una Solicitud de permiso para modificar el sitio de instalación de servicio inalámbrico personal propuesto en algún momento durante el plazo del Permiso de sitio de instalación de servicio inalámbrico personal.

Cada uno de los siguientes departamentos de la Ciudad determinó que la Aplicación cumplía con los requisitos aplicables del Código de Obras Públicas:

1. Obras Públicas de San Francisco/Oficina de Permisos de Uso y Mapeo de Calles ha aprobado el permiso con condiciones.
2. El Departamento de Salud Pública de San Francisco ha aprobado el permiso con condiciones.
3. El Departamento de Planificación de San Francisco aprobó el permiso con condiciones.

La aprobación final incluye las siguientes condiciones:

Condiciones de Obras Públicas de San Francisco:

1. Esta recomendación no se basa en ninguna variación de los dibujos representados y/o la simulación fotográfica; si una variación es diferente, se requiere una nueva presentación. En caso de que la instalación varíe con respecto a dichas condiciones, debe volver a enviarse al/los Departamentos para su posterior revisión y comentarios.
2. Nuevos postes: no se deben erigir nuevos postes ni colocarlos en distritos subterráneos.
3. Tirantes: siga todos los códigos de excavación para obtener los permisos necesarios para la colocación de tirantes. Los tirantes evitarán cruzar áreas conflictivas, como entradas de vehículos, rampas de acera.
4. Cumplir con los requisitos del código ADA para las leyes federales, estatales y locales. Asegurarse de que la ruta de ancho libre mínimo requerido para la ruta de acceso sea de cuatro pies.
5. Al finalizar la obra, proporcionar un conjunto de fotos de la construcción terminada del sitio de instalación a la Oficina de Permisos de Uso y Mapeo de Calles.
6. Mantener una certificación válida de seguro anualmente y reenviar una copia a la Oficina de Permisos de Uso y Mapeo de Calles.

Condiciones del Departamento de Salud Pública de San Francisco:

- Asegúrese de que cualquier equipo asociado con la instalación de esta antena no produzca un ruido superior a 45 dBA medidos a tres (3) pies de la fachada del edificio residencial más cercano.

- Asegúrese de que no haya áreas ocupadas públicamente a dos y medio (2,50) pies de la cara de la antena.

- Una vez instalada la antena, Mobilitie debe tomar mediciones de densidad de potencia de RF con la antena operando a plena potencia para verificar el nivel reportado en el informe de Hammett y Edison y para garantizar que el nivel de exposición pública de la FCC no se exceda en ningún área públicamente accesible. Esta medición debe tomarse nuevamente al momento de la renovación del permiso.

- Mobilitie debe ser consciente de que el público en general puede tener dudas sobre la antena y la posible fuente de RF cerca de sus viviendas. Mobilitie debe tener un procedimiento para tomar los niveles de densidad de potencia de RF en las viviendas cercanas cuando así lo soliciten los miembros del público en general.

- De conformidad con el Código de Obras Públicas de San Francisco, art. 25, Sec. 1527 (a)(2)(C), Mobilitie es responsable de pagar una tarifa de $210,00 al Departamento de Salud Pública de San Francisco para esta revisión.

Tenga en cuenta que esta aprobación y todas las condiciones se aplican solo al equipo y la instalación tal como se describe. Si se realizan cambios en el equipo o hay un aumento en la potencia radiada efectiva descrita anteriormente, se debe realizar una nueva revisión por parte del Departamento de Salud Pública.

Condiciones del Departamento de Planificación de San Francisco:

1. Plante y mantenga un árbol callejero apropiado.
2. No se puede usar ningún medidor expuesto, bandeja de medición o pedestal de medidor.
3. La antena y todo el equipo (conducto externo, unidades de relé de radio, anteojeras utilizadas para proteger los pernos del soporte [si es necesario] y mecanismos de montaje), excepto la señalización, si se usa para el cribado, se pintarán para que coincidan con el poste y se repintarán según sea necesario.
4. El cableado debajo de las unidades de relé de radio debe ingresar al poste con un espacio de no más de cinco pulgadas entre la parte inferior de cada unidad de relé de radio y la parte inferior del orificio de entrada correspondiente en el poste. La conexión del conducto en los puntos de entrada del poste deberá utilizar los tamaños de conexión más pequeños disponibles. Los compuestos de sellado, si se utilizan, deben estar ordenados, sin exceso de burbujas, y pintados a tono con el poste.
5. Retire la señalización del equipo elevado (incluido el rellenado de las marcas del logotipo del fabricante en las unidades/armarios de relé de radio) y las calcomanías de los equipos que puedan verse desde la acera y las viviendas, a menos que lo exija la normativa gubernamental.
6. Utilice la señalización de advertencia de RF más pequeña permitida (4 x 6 pulgadas); y coloque la pegatina de advertencia mirando hacia la calle, en un lugar lo más cercano posible a la antena. La pegatina estará orientada

   en sentido contrario a la calle, cuando no esté orientada frente a una ventana a 15 pies o menos de distancia. El color de fondo de la pegatina debe coincidir con la superficie de montaje del poste; y el logo y el texto deben ser blancos.
7. Apile los recintos de los equipos (sin incluir la antena) lo más cerca que permita la normativa aplicable y los estándares del equipo del fabricante.
8. Las costuras y pernos/tornillos en el área de montaje de la antena y la cubierta se deben fabricar e instalar de manera tal que reduzca su visibilidad (por ejemplo, tornillos de montaje a ras) desde el nivel de la acera.
9. No utilice luces indicadoras intermitentes visibles o similares.
10. No obstruya la vista desde, ni la luz en ninguna ventana residencial adyacente.
11. Las nuevas excavaciones de cubierta subterránea (bóveda), si se utilizan, no deberán dañar ni eliminar los bordillos de granito. No se generarán espacios significativos entre la tapa de la caja de la bóveda y el material de la acera principal debido a la instalación. Cualquier otro elemento arquitectónico histórico existente dentro del derecho de paso público deberá conservarse y protegerse durante la instalación. No se puede colocar el logotipo o nombre del transportista en la tapa de la bóveda.
12. Los elementos de la unidad de relé de radio no esenciales (asa y patas) deben quitarse.
13. El instalador hará los arreglos necesarios para que el personal del Departamento de Planificación revise la instalación inicial, a fin de garantizar el cumplimiento de las condiciones antes mencionadas (sin perjuicio de las inspecciones del propietario del poste y del Departamento de Obras Públicas).
14. Asegúrese de que no se dañen los puntos de acceso Wi-Fi y el cableado asociado utilizados por el

Departamento de Tecnología de la Ciudad durante la instalación (si está presente).

15. En caso de que la instalación varíe con respecto a dichas condiciones, la solicitud se volverá a enviar al Departamento de Planificación para su posterior revisión y comentarios.

Dentro de los quince (15) días calendario posteriores al envío y publicación de este aviso, cualquier persona puede apelar la emisión de este permiso ante la Junta de Apelaciones. Las apelaciones deben presentarse en persona por el apelante o por el agente del apelante. Generalmente, la Junta de Apelaciones requiere que se haga una cita para presentar una apelación. Para obtener más información sobre el proceso de apelación o para programar una cita, comuníquese con la Junta de Apelaciones en persona en 1650 Mission Street, Suite 304 o llame al 415-575-6880.

La apelación debe basarse en uno o más de los siguientes motivos:

1. El Departamento de Salud Pública determinó incorrectamente que la Solicitud cumple con el Estándar de Cumplimiento de Salud Pública (vea el Código de Obras Públicas, § 1507(b)).
2. El Departamento de Planificación determinó incorrectamente que la Solicitud cumple con el Estándar de Compatibilidad aplicable (vea el Código de Obras Públicas, § 1509 (b)).
3. La Solicitud no cumple con ningún otro requisito para obtener un Permiso de sitio de instalación de servicio inalámbrico personal.
4. El Solicitante tiene la intención de modificar el sitio de instalación de servicio inalámbrico personal después de la emisión del Permiso de una manera que no cumple con el Estándar de Compatibilidad aplicable.

Para obtener información adicional sobre la Aplicación y la aprobación final, puede contactar a James Singleton de Mobilitie al 650-814-0564 o JSingleton@mobilitie.com. También puede contactar a Obras Públicas de San Francisco al 415-554-5343.

Programa inalámbrico de Obras Públicas

PAUNAWA NG HULING PAGPAPASYA PARA PAGTIBAYIN ANG PERSONAL WIRELESS SERVICE FACILITY SITE PERMIT

London N. Breed
Mayor

Mohammed Nuru
Director

Jerry Sanguinetti
Manager

Street Use and Mapping
1155 Market St., 3rd floor
San Francisco, CA 94103
tel 415-554-5810

sfpublicworks.org
facebook.com/sfpublicworks
twitter.com/sfpublicworks

Petsa: 9/13/2018

Numero ng Aplikasyon .: 18WR-0033
Pangalan ng Aplikante: Mobilitie, LLC
Lokasyon: 1509 Shrader St

Sa wakas ay pinagtibay ng San Francisco Public Works ang nasabing Aplikasyon sa itaas na isinumite ng Mobilitie, LLC para sa isang Personal Wireless Service Facility Site Permit sa paligid ng 1509 Shrader St.

Kabilang sa mga kagamitan na ikakabit sa lokasyon na ito ang: Isang (1) antena na nalagay sa tuktok ng poste, isang (1) bakod ng kagamitan na nakakabit sa tagiliran ng poste kung saan nakalagay ang UE Relay at radyo. Isang pagsasalarawan na litrato ng pinagtibay na Personal Wireless Service Facility ang nakalakip dito.

Hindi batid ng Aplikante sa oras na ito kung ito ay maghahain ng isang Aplikasyon para sa isang permit na baguhin ang ipinapanukalang Personal Wireless Service Facility sa anumang oras sa panahon ng termino ng Personal Wireless Service Facility Site Permit.

Ang bawat isa sa mga sumusunod na mga kagawaran ng Lungsod ay nagpasiya na sumasapat ang Aplikasyon sa mga naaangkop na kinakailangan ng Public Works Code:

1. Pinagtibay ng San Francisco Public Works / Bureau of Street Use and Mapping ang permit na may mga kondisyon.
2. Pinagtibay ng San Francisco Department of Public Health ang permit na may mga kondisyon.
3. Pinagtibay ng San Francisco Planning Department ang permit na may mga kondisyon

Kasama sa huling pagpapatibay ang sumusunod na (mga)kondisyon:

Mga Kondisyon ng San Francisco Public Works:

1. Ang rekomendasyon na ito ay batay sa kondisyong walang pagkakaiba mula sa mga ipinakitang guhit at/o pagsasalarawan na litrato; kung ang pagkakaiba ay hindi kapareho nang kinakailangan ang muling pagsusumite. Kung ang instilasyon ay naiiba mula sa nasabing mga kondisyon, dapat itong muling isumite sa (mga)Kagawaran para sa karagdagang pagsusuri at komento
2. Mga Bagong Poste: walang bagong poste na itatayo o ilalagay sa mga distritong nasa ilalim ng lupa.
3. Down Guys: Sundin ang lahat ng code sa paghuhukay upang makuha ang mga kinakailangang permit para sa paglalagay ng down guys. Dapat iwasang tawirin ng down guys ang magkakasalungat na lugar ngunit hindi limitado sa mga daanan ng sasakyan, mga rampa ng kurbada.
4. Sumunod sa mga kinakailangan ng ADA code para sa Pederal, Estado, mga lokal na batas. Tiyakin na ang daan ng pinakamababang kinakailangang lapad ng espasyo para sa daraanan ay apat na talampakan.
5. Sa pagtatapos ng trabaho, maglaan ng isang hanay ng mga larawan ng instilasyon sa Bureau Street Use & Mapping Permit Office.
6. Panatilihin ang isang may bisang sertipikasyon ng taunang seguro at magsumite ng isang kopya sa Bureau Street Use & Mapping Permit Office.

Mga Kondisyon ng San Francisco Department of Public Health:

- Tiyakin na ang anumang kagamitan na nauugnay sa instilasyon ng poste ng antenang ito ay hindi lumilikha ng ingay na lampas sa 45 dBA na nasusukat sa tatlong (3) talampakan mula sa pinakamalapit na harapan ng gusaling tirahan.

- Tiyakin na walang mga lugar na okupado ng publiko sa loob ng dalawa at kalahating (2.50) talampakan mula sa harap ng antena.

- Sa sandaling maikabit na ang antena, kailangang sukatin ng Mobilitie ang RF power density habang gumagana ang antena sa sukdulang lakas upang beripikahin ang antas na iniulat sa Hammett and Edison na ulat at upang tiyakin na ang antas ng pagkakalantad ng publiko ayon sa FCC ay hindi lumalampas sa anumang lugar na nalalapitan ng publiko. Ang pagsusukat na ito ay kailangang gawin muli sa panahon ng pagpapanibago ng permit.

- Dapat ay batid ng Mobilitie na maaaring may mga alalahanin ang pangkalahatang publiko tungkol sa antena at posibleng pagmumulan ng RF malapit sa kanilang mga tirahan. Dapat ay may nakahandang pamamaraan ang Mobilitie sa pagkuha ng mga antas ng density ng lakas ng RF sa mga kalapit na tirahan kapag hiniling ng mga miyembro ng pangkalahatang publiko.

- Alinsunod sa San Francisco Public Works Code, Art. 25, Sec. 1527 (a)(2)(C) ang Mobilitie ay may pananagutan sa pagbabayad ng halagang $210.00 sa San Francisco Department of Public Health para sa pagsusuring ito.

Mangyaring tandaan na ang pagpapatibay na ito at anumang mga kondisyon ay nalalapat lamang sa kagamitan at instilasyon tulad ng inilarawan. Kung may ginawang anumang mga pagbabago sa kagamitan o anumang pagtaas sa epektibong ilalabas na lakas na inilarawan sa itaas, isang bagong pagsusuri ng Department of Public Health ang kailangang isagawa.

Mga Kondisyon ng San Francisco Planning Department:

1. Magtanim at panatilihin ang naaangkop na puno sa kalye.
2. Walang nakalantad na metro, pan ng metro o pedestal ng metro na maaaring gamitin.

3. Ang antena, at lahat ng kagamitan (panlabas na tubo, mga relay unit ng radyo, mga blinder na ginamit upang balutin ang mga bracket bolt [kung kinakailangan], at mga mekanismo ng pag-mount); maliban sa signage, kung ginamit para sa screening, ay dapat pinturahan lahat upang tumugma sa poste at muling pipinturahan kung kinakailangan.
4. Ang kable sa ilalim ng mga relay unit ng radyo ay dapat pumasok sa poste nang hindi hihigit sa limang-pulgada ang puwang sa pagitan ng ilalim ng bawat relay unit ng radyo at sa ilalim ng kaukulang butas ng pagpasok sa poste. Ang koneksyon sa tubo sa mga pasukan ng poste ay dapat gumamit ng pinakamaliit na kasyang sukat na makukuha. Ang mga sealing compound, kung ginamit, ay dapat malinis na walang labis na bulubok at pininturahan upang tumugma sa poste.
5. Alisin ang nakaangat na signage ng kagamitan (kabilang ang mga nakabaon na marka ng logo ng tagagawa sa mga relay unit/cabinet ng radio) at dekorasyon ng kagamitan na maaaring nakikita mula sa bangketa at tirahan, maliban kung ipinag-uutos ng regulasyon ng pamahalaan.
6. Gamitin ang pinakamaliit na RF warning signage na pinayagan (4 x 6 na pulgada); at ilagay ang sticker ng babala na nakaharap sa kalye, sa isang lokasyong pinakamalapit sa antena hangga't maaari. Dapat nakaharap ang sticker

   palayo sa kalye, kapag hindi nakaharap sa isang kalapit na bintana sa loob ng 15 talampakan. Ang kulay ng background ng sticker ay dapat tumugma sa harap kung saan naka-mount ang poste; at ang logo at teksto ay dapat na puti.
7. Itabi ang mga bakod ng kagamitan (hindi kasama ang antena) sa pinakamalapit na pinahihintulutan ng naaangkop na regulasyon at mga pamantayan sa kagamitan ng tagagawa.
8. Ang mga gilid at bolt/screw sa antena at at bahagi ng pinamumuuan ng sapot ay dapat na gawin at ikabit sa paraang hindi gaanong nakikita ang mga ito (hal. mga flush mounting na turnilyo) mula sa bangketa.
9. Huwag gumamit ng anumang nakikitang mga ilaw na kumikislap o katulad nito.
10. Huwag harangan ang tanawin mula sa, o ang liwanag sa anumang katabing bintana ng tirahan.
11. Ang bagong mga paghukay ng bakod (vault) sa ilalim ng lupa, kung ginamit, ay hindi dapat makapinsala o magtanggal ng mga granite sa kurbada. Walang malalaking puwang ang dapat na malikha sa pagitan ng vault enclosure lid at materyal ng pangunahing bangketa sanhi ng instilasyon. Ang anumang iba pang mga kasalukuyang makasaysayang elemento ng arkitektura sa loob ng pampublikong karapatan sa daan ay mananatili at poprotektahan sa panahon ng instilasyon. Walang logo ng carrier o pangalan ng carrier ang maaaring ilagay sa takip ng vault.
12. Ang mga hindi kinakailangang elemento ng relay unit ng radyo (hawakan at mga paa) ay aalisin.
13. Dapat asikasuhin ng taga-kabit na masuri ng tauhan ng Planning Department ang paunang instilasyon, upang masiguro ang pagsunod sa mga naunang nabanggit na kondisyon (sa kabila ng mga pag-iinspeksyon ng may-ari ng poste at Department of Public Works).

14. Tiyakin na ang Mga Dako ng Wi-Fi Access at kaugnay na mga kable, na ginamit ng Department of Technology
ng Lungsod, ay hindi nasira sa panahon ng instilasyon(kung mayroon).
15. Kung ang instilasyon ay iba mula sa mga nasabing kondisyon, ang aplikasyon ay dapat muling isumite sa Planning Department para sa karagdagang pagsusuri at komento.

Sa loob ng labinlimang (15) araw ng kalendaryo ng pagpapadala at pagpapahayag ng paunawang ito, maaaring umapela ang sinumang tao sa pagpapalabas ng permit na ito sa Board of Appeals. Ang mga apela ay dapat isampa ng personal alinman sa umaapela o ahente ng umaapela. Sa pangkalahatan, hinihingi ng Board of Appeals na dapat gawin ang appointment para maghain ng apela. Para sa higit pang impormasyon tungkol sa proseso ng pag-apila, o para mag-iskedyul ng appointment, mangyaring makipag-ugnay ng personal sa Board of Appeals sa 1650 Mission Street, Suite 304 o tumawag sa 415-575-6880.

Ang pag-apela ay kinakailangang batay sa isa o higit pa sa mga sumusunod na dahilan:

1. Mali ang pagpapasya ng Department of Public Health na ang Aplikasyon ay sumusunod sa Public Health Compliance Standard (Public Works Code § 1507(b)).
2. Mali ang pagpapasya ng Planning Department na ang Aplikasyon ay tumutugon sa naaangkop na Tier Compatibility Standard (Public Works Code § (1509(b)).
3. Ang Aplikasyon ay hindi sumusunod sa anumang iba pang kinakailangan para sa pagkuha ng Personal Wireless Service Facility Site Permit.
4. Binabalak baguhin ng aplikante ang Personal Wireless Service Facility pagkatapos na maibigay ang Permit sa paraang hindi susunod sa naaangkop na Pamantayan ng Pagkakatugma.

Upang makakuha ng karagdagang impormasyon hinggil sa Aplikasyon at huling pagpapatibay maaari kang makipag-ugnay kay James Singleton ng Mobilitie sa 650-814-0564 o JSingleton@mobilitie.com. Maaari ka ring makipag-ugnayan sa San Francisco Public Works sa 415-554-5343.

Public Works Wireless Program

EXHIBIT I

[*FAQs for Small Cells (wireless) on Steel Light and Transit Poles* issued by San Francisco Planning Department, updated August 2015 attached behind this page (14 pages).]

Exhibit I

SAN FRANCISCO
PLANNING DEPARTMENT

1650 Mission St.
Suite 400
San Francisco,
CA 94103-2479

Reception:
415.558.6378

Fax:
415.558.6409

Planning
Information:
415.558.6377

FAQs for Small Cells (wireless) on Steel Light and Transit Poles

This flyer is intended to provide answers to Frequently Asked Questions regarding the proposed addition of Personal Wireless Services Facilities (or Small Cells) to Steel Light and Transit Poles

- Wireless carriers propose to place a single ("Small Cell") antenna, shrouding, and equipment on 300+ steel light and transit poles primarily in SOMA, and the northeastern part of the City (east of Van Ness Avenue, and north of Market Street).
- These systems are referred to as "Small Cells" and are used to provide faster data coverage and capacity for mobile phone and device users.
- If a specific pole is tentatively approved, residents within 150 feet (as well as neighborhood groups within 300 feet) of a pole would receive a notice by mail; with a photo simulation and other information.
- The photo simulation below shows a proposed antenna on top of the pole; and two equipment enclosures midway down the pole (with signage affixed in front of one of the enclosures).
- Various City agencies, including Planning, Public Works, SFPUC, SFMTA (MUNI), and the Department of Technology have been working extensively on this proposed project, to ensure the design and siting is compatible with the surrounding neighborhoods.

What is being proposed at this time? Wireless carriers are proposing to add a single antenna & equipment to existing steel light and transit poles, with the first locations in the South of Market Area (SOMA), and the northeastern parts of the City (east of Van Ness Avenue and north of Market Street). An initial concept deployment map is provided further below.

Initial Steel Pole "Concept" Deployment Map

Who owns the poles? ***Steel*** poles along public streets that only feature a street light are generally owned by the San Francisco Public Utilities Commission (SFPUC)[1]. Transit poles that support electric lines for buses and light rail vehicles (including those with a street light) are generally owned by the San Francisco Municipal Transportation Agency (SFMTA, or "MUNI").

Wood poles are not typically owned by the City, but by either the Northern California Joint Pole Association (a consortium of utility providers), or Pacific Gas & Electric (typically wood poles only holding up a street light). [illegible] en [illegible]

Will the antennas & equipment be added to decorative or historic poles? No wireless facilities (antennas and equipment) are proposed on poles which are either historic (e.g. Path of Gold poles along Market Street in Downtown or historic poles along Mission Street & Columbus Avenue); or are decorative in nature (e.g. fluted poles in Jackson Square).

Do these systems generate noise or light? No. The antennas themselves do not generate noise or vibration. Noise is typically created by cooling fans; however the proposed equipment

[1] Approximately 30 steel light poles, where Small Cells are proposed, in the northeastern part of the City, are owned by Pacific Gas & Electric.

enclosures use passive cooling, without cooling fans. There are no lights used by the equipment or antennas.

Are new cabinets proposed on sidewalks? No new above ground sidewalk cabinets (surface mounted facilities), and no major street trenching is proposed. Fiber-optic cables would connect from the antenna, through the pole, then to existing underground pathways (conduit), and onto centralized switch locations.

Did these proposals go through design, historic preservation or environmental review? Yes. The Planning Department went through extensive review and redesign (see photos on last two pages) of these Small Cells. Planning staff worked with City agencies such as SFPUC, and SFMTA, along with wireless carriers on improving the designs so as to ensure they are thoughtfully integrated into our City's streetscapes.

In addition, the Architectural Review Committee (ARC), a sub-committee of the Historic Preservation Commission, reviewed the designs with respect to their compatibility within historic conservation and preservation districts.

- [illegible] *(these slides also include examples of designs not supported by Planning, and two wooden pole sites within the Northeast Waterfront Landmark District)*
- [illegible]
- [illegible]

Lastly, the facilities underwent environmental review and were determined to be categorically exempt (sample link), per the California Environmental Quality Act (CEQA).

Existing transit pole on the left and a proposed Small Cell (on Columbus Avenue) on the right The Italian flag tri-colors painted on the existing pole (below sign) would be retained.

Does the City receive revenue? Yes[2]., the City receives a license fee of approximately $4,000 per year, per pole. More information on the lease terms can be found at this link, for SFPUC, and this link, for SFMTA (MUNI).

- SFGovTV videos of a hearing before San Francisco Board of Supervisors Budget & Finance Committee for SFPUC owned light poles (link); and video of an SFMTA Board hearing, for SFMTA owned poles ([illegible]).

Why do the conditions of approval include a street tree? The Planning Department typically requests a street tree to be provided by the wireless carrier for each facility mounted on a pole within the public right-of-way; in order to screen the equipment. In the event a tree cannot be planted due to conflicts such as existing trees, driveways or utility infrastructure (link to [illegible], the wireless carrier would be required to pay an in-lieu fee to be used by the SF Bureau of Urban Forestry.

Which companies are proposing to add Small Cells? Various carriers are proposing facilities. The initial proposals would include a system operated by Verizon Wireless for those sites in

[2] No license fee applies for the subset of steel light poles owned by Pacific Gas & Electric (PG&E).

SOMA, and another system operated by Extenet Systems, also for Verizon Wireless, for those sites in the northeastern part of the City (east of Van Ness Avenue).

Another carrier, Mobilitie, has also signed agreements (with SFPUC & SFMTA) to potentially operate a network for other wireless carriers, but no specific design has been approved as of August 2015.

Background: While wireless carriers install and operate their own systems, some companies, such as Extenet Systems, Mobilitie, and Crown Castle (NextG), will often run these small cell systems on behalf of the four primary wireless carriers licensed by the Federal Communications Commission (AT&T Mobility, T-Mobile, Sprint, and Verizon Wireless), to operate in the San Francisco Bay Area.

What is the review process for these sites? The pole-owning agency (SFMTA or SFPUC) would provide permission to the carrier, based on the license agreement and specific pole review.

The carrier would then apply for a Personal Wireless Services Facility Permit from the Department of Public Works (DPW). These permits are subject to Article 25 of the Public Works Code[3].

Those permits would be referred to the Department of Public Health and Planning Department for design and preservation (historic resources) review; as well as review by the Recreation and Parks Department for those sites near a public park or plaza.

If an approval recommendation is provided by each department, DPW would issue a tentative notice of approval. The carrier would then be required to send a mailed notice out to all residents and property owners within 150 feet of the pole, and all neighborhood groups (registered with the Planning Department) within 300 feet. A notice would also be attached to the pole.

If no protests (request for a DPW hearing) are filed within 20 days of mailing, DPW would issue the permit.

Would the actual pole be replaced? Not typically. In some limited instances a pole that is worn or damaged may need to be replaced.

What exactly is proposed on the pole? The initial Extenet Systems and Verizon Wireless proposals would include an antenna at the top of the pole and two equipment enclosures mounted midway down the pole. In addition a small radio-frequency information and site

---

[3] Wireless facilities on poles situated on lands (map viewer) under the jurisdiction of the Port of San Francisco, would not be subject to Article 25 of the Public Works Code.

identification sticker would be placed near the antenna. A detailed breakdown, for a (wider pole diameter) SFMTA-owned pole is provided further below.

What is the range of these systems? That depends on a number of factors (e.g. nearby buildings blocking signals and the presence of hills or trees), but on average, these systems have an approximate range of 150 to 500 feet, due to their low mounting height and low power output (either 66, 100, or 174 watts).

For comparison purposes, a typical rooftop-mounted "macro" facility, with higher power usage (e.g. 10,000+ watts), and a higher mounting location; can have a range of between a mile in a rural area, or down to a quarter mile in a more urban area.

Do these networks replace the use of wireless antennas on building rooftops? No. These systems are generally intended to complement the existing networks of rooftop sites throughout the City. While most areas of San Francisco have good (mobile) voice coverage, wireless carriers are typically proposing these sites to complement the "macro" rooftop sites and offer improved high-speed data coverage for mobile users with smaller (comparatively lower power) facilities closer to sidewalk and street level. While each carrier has different goals and technologies, the use of Small Cells on steel light and transit poles may lessen the demand for the overall number (or specific size) of larger rooftop sites; allowing for more scale and context appropriate siting and design of wireless infrastructure in San Francisco.

Background: There are approximately 700 existing micro or macro (mostly rooftop-mounted) sites in San Francisco, each with between 1 to 16 panel antennas, with each antenna approximately the size of a parking meter. There are also approximately 383 existing wireless facilities mounted to wooden utility poles (which are not owned by the City).

Map of 1,000+ existing wireless facilities in San Francisco (map does not include all of the 383 existing facilities mounted on *wooden* utility poles)

New! Wireless Telecommunications Facilities N/A April 2015

Interactive map and Google Fusion Table displaying locations of wireless / cell tower telecommunications facilities (including cell phone masts) in San Francisco

How long would construction take? Generally, the installation of the antennas and equipment on the pole, and painting (if needed to match equipment to the pole) can be accomplished in a few days. Additional work may be required at sidewalk level to connect power and fiber-optic cables (used to transmit signals) to the pole-mounted equipment and antennas.

What if the carrier wants to change the equipment in the future? Because the City owns the majority of steel poles, we can ensure that if any changes are proposed, that they are more closely reviewed to ensure compatibility.

Will these Small Cells interfere with my home electronics, or City Wi-Fi on Market Street or in parks and plazas? The City's license agreement with carriers requires the carrier to ensure they do not interfere with other City communication systems. This would include public Wi-Fi systems (such as those at many parks and on Market Street) that are operated by the Department of Technology. The Federal Communications Commission also requires carriers to take steps to eliminate or reduce potential interference with other electronics. To date, the City has generally not seen a pattern of interference created by similar commercial wireless facilities.

What is the technical term for these systems? The City refers to systems in the public right-of-way (e.g. on poles along streets) as "Personal Wireless Services Facilities."

Antennas and equipment on buildings, for example, are referred to as either "Micro" or "Macro" Wireless Telecommunications Services Facilities (WTS). Micro WTS facilities typically

feature 1 or 2 small antennas (each about the size of a baseball bat). Macro WTS facilities are larger systems (3 to 16 panel antennas and equipment), mostly found on rooftops in San Francisco.

Wireless carriers will often refer to Personal Wireless Services facilities on poles as either: "Small Cells, "or "Outdoor Distributed Antenna Systems," or the acronym "oDAS."

Are these facilities reviewed by the Planning Commission? No. While, many wireless facilities, such as those on building rooftops are typically reviewed by the Planning Commission; wireless facilities on wooden or steel poles in the public right-of-way are not reviewed by the Planning Commission.

The Planning Department (staff) reviews wireless facilities on wooden or steel poles, with the permits administered by the Department of Public Works.

How do these systems conform with the City's General Plan or Master Plan (Section 101.1 of the Planning Code)?

By providing robust communications that are well-designed, these systems can improve connectivity for residents, visitors, and businesses, including neighborhood-serving retail. In addition:

- The design of these facilities would not detract from streetscapes, historic districts or other areas that define individual neighborhoods and the City as a whole.
- These facilities would not impede MUNI transit service and would provide additional revenue to SFTMA (MUNI) and SFPUC.
- These facilities would enhance connectivity in the event of an emergency.
- The facilities would not affect the use of parks or open space, nor would they impair access to sunlight or detract from scenic vistas.

What about safety from radio-frequency emissions? All Personal Wireless Facilities proposed in San Francisco are reviewed by the San Francisco Department of Public Health (DPH). This review looks at both the radio-frequency (RF) emissions report created for each type of system; as well as field testing from the antenna during operations, if approved and installed.

Field testing is required each time a modification (change of equipment or antenna) is proposed that may change the RF emissions, and every time the permit is renewed.

A sample copy of the RF report and DPH approval for these systems can be found at this link.

Residents near an operating system can request testing of their dwelling units, at no charge (free). The City has not seen a pattern of non-compliance with FCC-established standards, for these small cell systems.

Due to their low power output (either 66, 100, or 174 watts) the general public should remain between 4 to 8 feet (depending on wattage of the specific antenna) away from the face of the antenna at the top of the pole. This distance does **not** apply when underneath the antenna, because of the directional nature of these systems.

For comparison purposes, a typical large "macro" (10,000+ watts, and larger antennas) rooftop-mounted system may have a public stay-away distance of 30 to 65 feet from the face of the antennas.

The antennas are typically mounted no closer than 8 feet from the nearest window, deck, or other publicly-accessible area. In addition, while the antenna shape is akin to a rounded cone, these antennas are directional in nature with the signal primarily focused up and down streets, and not directly into the residence behind the pole.

How do the antenna energy levels from these systems compare to what is allowed both in the US and overseas? The limits set by the FCC for frequencies used for mobile phone operators are very similar to those limits used for mobile phone operators in most of the European Union. Furthermore, when antennas such as these are producing radio frequency exposures of around 1% of the FCC's standards, that is also generally compliant with even the most restrictive standards found in a few countries, such as Switzerland.

When the City has conducted in-the-field testing, using our own calibrated radio-frequency meter, for similar pole-mounted antennas; we have typically seen "actual" RF exposure levels within adjacent upper level dwellings (or at ground level) at, or near 1% of the limits set by the FCC.

These systems generate an effective maximum radiated power (ERP) of between 66 to 174 watts (depending on antenna model at a given location). This is considered "low" when compared, for example to typical rooftop-mounted "macro" wireless facilities, with maximum ERPs of around 7,000 to 10,000+ watts (e.g. a site approved on the roof of a residential building at 2001 Sacramento Street, in Pacific Heights, or for an existing facility on the roof of 725 Greenwich Street in North Beach).

The maximum ERP wattage assumes the antenna is operating at maximum capacity to generate a worst-case scenario in determining compliance with standards set by the Federal Communications Commission (FCC). That is not a typical operating condition. The City has not seen a pattern of non-compliance for pole-mounted facilities, with radio-frequency exposure standards.

How does the radio-frequency (RF) exposure from these antennas compare to the RF output from a mobile phone, baby monitor, or Wi-Fi router in a persons home? RF exposure is highly dependent on factors like distance and orientation from the antenna (so being below or

behind these antennas generates significantly lower RF exposure). Generally, any person within their home (even if on an upper story dwelling unit at the same level as the antenna), or at ground level would be subject to higher RF exposure levels from a cell phone in their hand (if they own one) than the RF exposure typically seen from these antennas.

This is due to the distance between the antenna and any publicly accessible areas, as well as the orientation of the antennas. The antennas on steel poles are directional (meaning they have a specific beam pattern) so the RF exposure at a dwelling right behind the antenna is significantly lower than being directly in front of the antenna.

Are wireless facilities on poles banned in Europe or other California cities, including Berkeley? No. Wireless systems can be found on poles and buildings in Europe, and on other California cities, including Berkeley.

Berkeley recently passed an ordinance to require that when people purchase cell phones that they are made aware that the mobile device itself generates radio-frequency (RF) emissions, and provide relevant information (link). The ordinance is currently subject to legal challenge.

Are these systems safe for birds? These systems have not been shown to affect birds or other wildlife.

How is this different from services such as Comcast, Sonic, or AT&T U-Verse/Lightspeed? Those services primarily deliver "wired" internet, cable television and landline phone service without antennas; though some cable strand (antenna) modems (providing Comcast Wi-Fi service) can be found on overhead communication lines, strung between wooden utility poles.

These proposed Small Cells on City-owned poles would provide wireless mobile voice and data coverage.

Do other cities have these small cell systems? Yes. Wireless carriers have proposed similar networks in varying cities ranging from places like New York City to San Diego, and smaller communities throughout California. The City looked at various deployments from other cities while developing this project (examples on slides 7 and 8) .

Can I protest the installation of a wireless facility on my block? Yes. If you have received notice that a wireless facility has been proposed to be installed on your block it means DPW has tentatively approved the application. It also means that the Planning Department, DPH, and possibly the Recreation and Park Department have recommended that DPW grant the permit. While you may protest the issuance of the permit, you must do so in the time set forth in the notice, which will be 20 days after the notice is postmarked. DPW will not consider an untimely protest. If your protest is timely, DPW will hold a hearing to determine whether to issue the permit. DPW will notify you of the date and time for the hearing. You will be given the opportunity during the hearing to explain the reasons for your protest. Contact information for protests can be found on the DPW web site (link).

Can I appeal DPW's issuance of a wireless permit? Yes. Whether or not you protested the permit you may appeal DPW's issuance of the permit to the Board of Appeals. As with protests, you must file your appeal in the time required by City law, which is generally 15 days after the permit is issued. More information about filing an appeal can be found on the Board of Appeals web site (link). Only the environmental determination may be appealed to the Board of Supervisors (link).

Who do I contact if I have additional questions? Please contact the Planning Department's Wireless Planner, Omar Masry, at (415) 575-9116, or Omar.Masry@sfgov.org

Common Terms:

DAS – Acronym for a Distributed Antenna System. A network of small antennas and equipment enclosures usually attached to steel or wooden poles in in the public right-of-way.

"Macro" Wireless Telecommunication Services (WTS) Facility - Typically three to sixteen panel antennas mounted on the roof of a building, along with multiple equipment cabinets. Permits reviewed by the Planning Department, Fire Department, DPH, and Department of Building Inspection (DBI); subject to the City's Wireless Guidelines, and Planning Code. Macro WTS facilities typically require Planning Commission approval in most residential, neighborhood commercial, and mixed-use zoning districts. A photo simulation of a previously approved Macro WTS Facility can be found on Pages 37 and 38 of this link.

"Micro" Wireless Telecommunications Services (WTS) Facility - Typically one or two antennas mounted on the roof of a building. Permits reviewed by the Planning Department, Fire Department, DPH, and Department of Building Inspection (DBI); subject to the City's Wireless Guidelines, Planning Code, and review by the Zoning Administrator. Example link.

Personal Wireless Services Facility Permit – Permit for wireless facilities mounted on poles in the public right-of-way. Permits administered by the Department of Public Works.

Public Right of Way – Typically streets and sidewalks, where light and utility poles are placed.

Radio Relay Unit - Equipment enclosures which functions akin to a computer; and routes power and signal through wires (inside the pole) to the transmitting antenna.

Small Cells – Similar to DAS.

14 inch wide antenna enclosure* on wide transit poles

Small RF Warning Sticker

Cabling located inside pole

(2) Radio Relay Units
(computers for power and communications)
No fan noise, lights, logos or decals

No major street trenching required
In some instances a 2' x 3' sidewalk-flush vault is required

** A 10.5 inch wide antenna enclosure would be used on slimmer light poles*

Previous Site Design Examples

Example of a design that was **disapproved** by Planning, and is no longer proposed.

In this example the antenna is mounted on a side-arm.

Example of a design that was **disapproved** by Planning, and is no longer proposed. In this example equipment and cabling below the antenna is not shrouded

Example of an initial mockup (**not proposed)**.

This example featured unpainted antenna shrouding with an alternate design; extra stickers on the pole and wider cabling sweeps below the two unpainted computers midway down the pole.

EXHIBIT J

[RF Exposure Study by Hammett & Edison, Inc., dated February 16, 2018 attached behind this page (3 pages).]

Mobilitie, LLC • Proposed DAS Node (No. 9CAB007733 / SF90xs701B)
1509 Shrader Street • San Francisco, California

Statement of Hammett & Edison, Inc., Consulting Engineers

The firm of Hammett & Edison, Inc., Consulting Engineers, has been retained on behalf of Mobilitie, LLC, a wireless telecommunications facilities provider, to evaluate the addition of Node No. 9CAB007733 / SF90xs701B to be added to the Mobilitie distributed antenna system ("DAS") in San Francisco, California, for compliance with appropriate guidelines limiting human exposure to radio frequency ("RF") electromagnetic fields.

Background

The San Francisco Department of Public Health has adopted an 11-point checklist for determining compliance of proposed WTS facilities or proposed modifications to such facilities with prevailing safety standards. The acceptable limits set by the FCC for exposures of unlimited duration are:

Wireless Service	Frequency Band	Occupational Limit	Public Limit
Microwave (Point-to-Point)	5–80 GHz	5.00 mW/cm^2	1.00 mW/cm^2
WiFi (and unlicensed uses)	2–6	5.00	1.00
BRS (Broadband Radio)	2,600 MHz	5.00	1.00
WCS (Wireless Communication)	2,300	5.00	1.00
AWS (Advanced Wireless)	2,100	5.00	1.00
PCS (Personal Communication)	1,950	5.00	1.00
Cellular	870	2.90	0.58
SMR (Specialized Mobile Radio)	855	2.85	0.57
700 MHz	700	2.40	0.48
[most restrictive frequency range]	30–300	1.00	0.20

Checklist

Reference has been made to information provided by Mobilitie, including drawings by Cable Engineering Services, dated January 25, 2018. It should be noted that the calculation results in this Statement include several "worst-case" assumptions and therefore are expected to overstate actual power density levels from the proposed operations.

1. The location, identity, and total number of all operational radiating antennas installed at this site.

There are reported no wireless base stations presently installed at this site, a light pole sited in the public right-of-way in front of the three-story residence located at 1509 Shrader Street.

2. List all radiating antennas located within 100 feet of the site that could contribute to the cumulative radio frequency energy at this location.

While there may be other WTS facilities near this site, the additive impact at the proposed node location would be negligible in terms of compliance with the FCC public limit.

3. *Provide a narrative description of the proposed work for this project.*

Mobilitie proposes to remove the existing light pole, to install a new pole at the same location, and to install one omnidirectional antenna and one wireless relay unit on the new pole. This is consistent with the scope of work described in the drawings for transmitting elements.

4. *Provide an inventory of the make and model of antennas or transmitting equipment being installed or removed.*

Mobilitie proposes to install one Alpha Wireless Model AW3477-S1-G omnidirectional cylindrical antenna on top of the new light pole. The antenna would employ up to 14° downtilt and would be mounted at an effective height of about 31 feet above ground. Mobilitie also proposes to install an Airspan Model iRelay 460 wireless relay unit with integrated directional antenna on the pole, at an effective height of about 19 feet above ground and oriented toward 37°T, for interconnection of this node with others in the network.

5. *Describe the existing radio frequency energy environment at the nearest walking/working surface to the antennas and at ground level. This description may be based on field measurements or calculations.*

Because there are no antennas at the site presently, nor any direct access to the proposed antenna locations, existing RF levels for a person at the site are presumed to be well below the applicable public exposure limit.

6. *Provide the maximum effective radiated power per sector for the proposed installation. The power should be reported in watts and reported both as a total and broken down by frequency band.*

Sprint proposes to operate from this facility with a maximum effective radiated power in any direction of 154 watts, representing simultaneous operation at 150 watts for BRS service from the Alpha Wireless antenna and 3.8 watts in the same band from the Airspan antenna. There are no other carriers presently proposing to use this facility.

7. *Describe the maximum cumulative predicted radio frequency energy level for any nearby publicly accessible building or area.*

The maximum calculated level at the top-floor elevation of any nearby building is 6.9% of the public exposure limit; this occurs at the three-story residence at 1509 Shrader Street, located about 15 feet away.

8. *Report the estimated cumulative radio frequency fields for the proposed site at ground level.*

For a person anywhere at ground, the maximum RF exposure level due to the proposed operation is calculated to be 0.012 mW/cm^2, which is 1.2% of the applicable public exposure limit. Cumulative RF levels at ground level near the site are estimated to remain well below the applicable public limit.

9. *Provide the maximum distance (in feet) the three-dimensional perimeter of the radio frequency energy level equal to the public and occupational exposure limit is calculated to extend from the face of the antennas*

The three-dimensional perimeters of RF levels equal to the public and occupational exposure limits are calculated to extend up to 2½ feet and ½ foot out from the cylindrical antenna, respectively, and to much lesser distances above and below; these do not reach any publicly accessible areas. The distance to the public limit from the Airspan antenna is calculated to be less than 1 foot; the occupational limit is not reached at any distance.

10. *Provide a description of whether or not the [illegible] has access to the antennas. Describe any existing or proposed warning signs, [illegible] barriers, rooftop striping or other safety precautions for people nearing the equipment as may be required by any applicable FCC-adopted standards*

Due to their mounting location and heights, the Mobilitie antennas would not be accessible to unauthorized persons, and so no mitigation measures are necessary to comply with the FCC public exposure guidelines. The proposed operation is considered intrinsically compliant with the occupational limit. The explanatory sign that Mobilitie proposes to install would be sufficient to meet FCC requirements; it is recommended that the sign be placed on the street side of the pole.

11. [illegible]

The undersigned author of this statement is a qualified Professional Engineer, holding California Registration No. E-21306, which expires on September 30, 2019. This work has been carried out under his direction, and all statements are true and correct of his own knowledge except, where noted, when data has been supplied by others, which data he believes to be correct.

Conclusion

Based on the information and analysis above, it is the undersigned's professional opinion that operation of the node proposed by Mobilitie, LLC near 1509 Shrader Street in San Francisco, California, will comply with the prevailing standards for limiting public exposure to radio frequency energy and, therefore, will not for this reason cause a significant impact on the environment. The highest calculated level in publicly accessible areas is much less than the prevailing standards allow for exposures of unlimited duration. This finding is consistent with measurements of actual exposure conditions taken at other operating nodes.

Neil J O[illegible]
7[illegible]00

No. E-21306
Exp. 9-30-2019
OF

February 16, 2018

EXHIBIT K

[Noise Study by Hammett & Edison, Inc., dated November 3, 2017 attached behind this page (4 pages).]

Sprint • Proposed Small Cells
Thirty-Four Pole Locations • San Francisco, California

Statement of Hammett & Edison, Inc., Consulting Engineers

The firm of Hammett & Edison, Inc., Consulting Engineers, has been retained on behalf of Sprint, a personal wireless telecommunications carrier, to evaluate the addition of certain new "small cell" base stations in San Francisco, California, for compliance with municipal limits on sound levels from such installations.

Executive Summary

Sprint proposes to install small cells on 34 light poles in San Francisco, each consisting of an antenna high on the pole and an equipment cabinet lower on the side of the pole. Noise from the proposed operations will comply with the City's pertinent noise limits.

Prevailing Standard

The City of San Francisco establishes limits on noise emissions for equipment installed in public rights-of-way under Article 25 §1517(b) of its Public Works Code, limiting noise from wireless facilities to 45 dBA as measured at a distance of 3 feet "from any residential building facade." A summary of noise assessment and calculation methodologies is shown in Figure 1.

General Facility Requirements

Wireless telecommunications facilities ("cell sites") typically consist of two distinct parts: the electronic base transceivers, that are connected to traditional wired telephone lines, and the antennas, that send wireless signals created by the transceivers out to be received by individual subscriber units. The cabinets are often located outdoors and are connected to the antennas by coaxial cables. Some cabinets require fans to cool the electronics inside; such cooling is often integrated into the cabinets.

Site & Facility Description

According to information provided by Sprint, including drawings by Cable Engineering Services dated April 7, 10, 11, 12, 13, and 14, and October 13 and 16, 2017, an equipment cabinet is to be mounted on the side of each pole at 34 new small cells, as listed in Table 1. The equipment in each cabinet is cooled by air flow from three ADDA fans: two Model AA1251MB-AT and one Model AA1281HB-AWR2T. The cabinet would be mounted at least 11½ feet above ground; this is the transceiver described above, that handles the conversions of signal format between wired and wireless.

Study Results

ADDA reports the following maximum noise levels from its fan units:

Equipment	Maximum Noise Level	Reference Distance
AA1251MB-AT	44.1 dBA	1 meter
AA1281HB-AWR2T	43 dBA	1 meter

The City's limit of 45 dBA would not extend beyond 5 feet for the simultaneous operation of all three fan units in the cabinet. Since the Public Works Code requires that noise be assessed at 3 feet from the face of the nearest residential building, then this limit would be met for any siting of a cabinet at least 8 feet from the face of the nearest residential building. **All of the proposed small cells in Table 1 meet this distance requirement.**

Conclusion

Based on the information and analysis above, it is the undersigned's professional opinion that these Sprint small cells in San Francisco, California, will comply with the municipal standards limiting acoustic noise emission levels.

Authorship

The undersigned author of this statement is a qualified Professional Engineer, holding California Registration Nos. E-13026 and M-20676, which expire on June 30, 2019. This work has been carried out under his direction, and all statements are true and correct of his own knowledge except, where noted, when data has been supplied by others, which data he believes to be correct.

E-13026
M-20676
Exp. 6-30-2019

William F. [redacted], P.E.
707/996-5200

November 3, 2017

Sprint • Proposed Small Cells
Thirty-Four Pole Locations • San Francisco, California

Sprint Small Cell #	Approximate Address
SF90XS1F5A	888 Howard Street
SF90XS1X1C	798 Eddy Street
SF90XS2U6B	295 Marina Boulevard
SF90XS2V1B	29 Masonic Avenue
SF90XS3E5D	190 Lenox Way
SF90XS3F1A	3575 Washington Street
SF90XS591B	4767 Mission Street
SF90XS648D	3945 Balboa Street
SF90XS694I	450A Irving Street
SF90XS701B	1509 Shrader Street
SF90XS702A	400 Parnassus Avenue
SF90XS742A	450 Stanyan Street
SF90XS745A	1576 Haight Street
SF90XS746A	1285 Waller Stree 1400
SF90XS747C	Masonic Avenue 900
SF90XS755A	14th Street
SF90XS760B	607 Haight Street
SF90XS789D	600 15th Avenue
SF90XS798A	501 Clement Street
SF90XS803D	2944 Turk Boulevard
SF90XS826B	1717 Eddy Street
SF90XS827A	1502 Fillmore Street
SF90XS831D	1335 Eddy Street
SF90XS842H	2224 Lake Street
SF90XS854B	3468 California Street
SF90XS858B	3200 California Street
SF90XS861E	2320 Sutter Street
SF90XS862B	2520 Bush Street
SF90XS864C	3401 Washington Street
SF90XS865B	3344 Sacramento Street
SF90XS869C	1924 Broderick Street
SF90XS877D	2333 Buchannan Street
SF90XS938B	2295 Francisco Street
SF90XS942D	3201 Octavia Street

Table 1. Proposed Sprint Small Cells

Noise Level Calculation Methodology

Most municipalities and other agencies specify noise limits in units of dBA, which is intended to mimic the reduced receptivity of the human ear to Sound Pressure ("L_P") at particularly low or high frequencies. This frequency-sensitive filter shape, shown in the graph to the right as defined in the International Electrotechnical Commission Standard No. 179, the American National Standards Institute Standard No. 5.1, and various other standards, is also incorporated into most calibrated field test equipment for measuring noise levels.

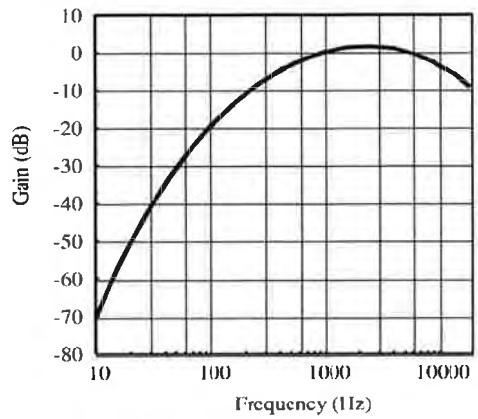

30 dBA	library
40 dBA	rural background
50 dBA	office space
60 dBA	conversation
70 dBA	car radio
80 dBA	traffic corner
90 dBA	lawnmower

The dBA units of measure are referenced to a pressure of 20 μPa (micropascals), which is the threshold of normal hearing. Although noise levels vary greatly by location and noise source, representative levels are shown in the box to the left.

Manufacturers of many types of equipment, such as air conditioners, generators, and telecommunications devices, often test their products in various configurations to determine the acoustical emissions at certain distances. This data, normally expressed in dBA at a known reference distance, can be used to determine the corresponding sound pressure level at any particular distance, such as at a nearby building or property line. The sound pressure drops as the square of the increase in distance, according to the formula:

$$L_P = L_K + 20 \log(D_K/D_P),$$

where L_P is the sound pressure level at distance D_p and L_K is the known sound pressure level at distance D_K.

Individual sound pressure levels at a particular point from several different noise sources cannot be combined directly in units of dBA. Rather, the units need to be converted to scalar sound intensity units in order to be added together, then converted back to decibel units, according to the formula:

$$L_T = 10 \log \left(10^{L_1/10} + 10^{L_2/10} + \ldots\right),$$

where L_T is the total sound pressure level and L_1, L_2, etc are individual sound pressure levels.

Certain equipment installations may include the placement of barriers and/or absorptive materials to reduce transmission of noise beyond the site. Noise Reduction Coefficients ("NRC") are published for many different materials, expressed as unitless power factors, with 0 being perfect reflection and 1 being perfect absorption. Unpainted concrete block, for instance, can have an NRC as high as 0.35. However, a barrier's effectiveness depends on its specific configuration, as well as the materials used and their surface treatment.

mobilitie
intelligent infrastructure

SITE ID: 9CAB007733

ADJACENT TO 1509 SHRADER ST.,
SAN FRANCISCO, CA 94117
37.761245, -122.450591

(N) (28'-6" AGL) GALVANIZED STEEL (PUC) STREET LIGHT POLE

SITE COMPLETION CHECKLIST

- DURABLE PAINT: ANTENNAS, MOUNTING BRACKETS AND RADIO RELAY UNITS TO BE PAINTED "TO MATCH EXISTING POLE COLOR" USING DURABLE PAINT (E.G. SHERWIN WILLIAMS, FRAZEE OR EQUIVALENT).
- CABLING: CABLING (TO MATCH EXISTING POLE COLOR) TO BE INSTALLED IN A TIDY MANNER WITHOUT EXCESS CABLE LOOPS).
- SPACING OF SUPPORT ELEMENTS: SUPPORT EQUIPMENT TO BE CLUSTERED (VERTICALLY) AS CLOSE AS IS TECHNICALLY FEASIBLE ON POLE.
- LOGO REMOVAL: ALL EQUIPMENT LOGOS, OTHER THAN REQUIRED BY REGULATION (E.G. NODE IDENTIFICATION OF SHUTDOWN SIGNAGE) SHALL BE PAINTED OVER OR REMOVED, RAISED / DEPRESSED LOGOS / TEXT, IF PRESENT TO BE SANDED OFF, OR SIMILAR REMOVED / FILLED.
- SIGNAGE: FCC MANDATED RF WARNING SIGNAGE SHALL FACE OUT TO STREET WHEN PLACED IN FRONT OF OR NEAR WINDOW. SIGNAGE SHALL FACE TOWARD BUILDING IF THERE IS NO WINDOW.

GENERAL NOTES

- THE FACILITY IS NOT FOR HUMAN HABITATION. A TECHNICIAN WILL VISIT THE SITE AS REQUIRED FOR ROUTINE MAINTENANCE. THE PROJECT WILL NOT RESULT IN ANY SIGNIFICANT DISTURBANCE OR EFFECT ON DRAINAGE; NO SANITARY SEWER SERVICE, POTABLE WATER, OR TRASH DISPOSAL IS REQUIRED AND NO COMMERCIAL SIGNAGE IS PROPOSED.
- CONTRACTOR SHALL INSTALL PULL BOXES PARALLEL TO THE FACE OF THE CURB, AND FLUSH WITH THE SURROUNDING PAVING.
- EXISTING PAVING DISTURBED BY DAS CARRIER CONSTRUCTION SHALL BE RESTORED TO MATCH THE EXISTING PAVING BY DAS CARRIER CONTRACTOR.
- PAVING RESTORATION SHALL BE PERFORMED IN ACCORDANCE WITH THE SFDPW STANDARD PAVING DETAILS.
- CONTRACTOR SHALL NOT REMOVE OR DAMAGE EXISTING GRANITE CURB STONES.

SITE INFORMATION

CARRIER:	SPRINT
APPLICANT:	MOBILITIE, LLC
APPLICANT ADDRESS:	2955 RED HILL AVE, COSTA MESA, CA 92626
APPLICANT CONTACT:	JAMES SINGLETON
APPLICANT PHONE:	(650) 814-0564
EMAIL:	JAMES.SINGLETON@MOBILITIE.COM
PUBLIC ROW/PRIVATE PROPERTY:	PUBLIC ROW
NEAREST ADDRESS:	1509 SHRADER ST., SAN FRANCISCO, CA 94117
NEAREST APN(S):	1289-002
ZONING DISTRICT:	RH-2
SITE LATITUDE:	37.761245°
SITE LONGITUDE:	-122.450591°
GIS TYPE:	(NAD83)
GROUND ELEVATION:	N/A
COUNTY:	SAN FRANCISCO COUNTY
JURISDICTION:	CITY OF SAN FRANCISCO

DO NOT SCALE DRAWINGS

SUBCONTRACTOR SHALL VERIFY ALL PLANS, EXISTING DIMENSIONS & FIELD CONDITIONS ON THE JOB SITE & SHALL IMMEDIATELY NOTIFY THE ENGINEER IN WRITING OF ANY DISCREPANCIES BEFORE PROCEEDING WITH THE WORK OR BE RESPONSIBLE FOR SAME.

LOCATION MAPS

VICINITY MAP

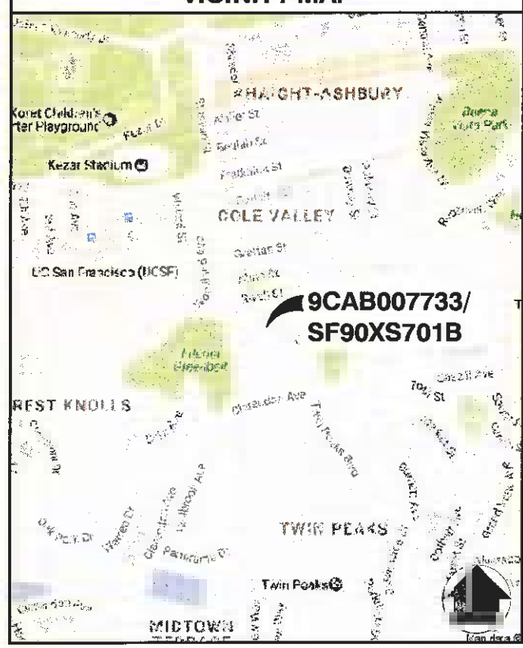

LOCAL MAP

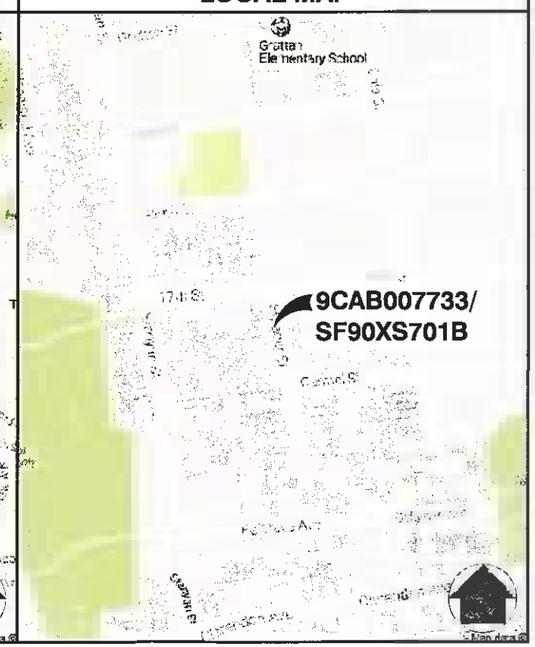

APPROVALS

THE FOLLOWING PARTIES HEREBY APPROVE AND ACCEPT THESE DOCUMENTS AND AUTHORIZE THE CONTRACTOR TO PROCEED WITH THE CONSTRUCTION DESCRIBED HEREIN. ALL CONSTRUCTION DOCUMENTS ARE SUBJECT TO REVIEW BY THE LOCAL BUILDING DEPARTMENT AND ANY CHANGES AND MODIFICATIONS THEY MAY IMPOSE

	PRINT NAME	SIGNATURE	DATE
STRUCTURE OWNER	R.O.W.		
IMPLEMENTATION ENG.			
RF ENGINEER			
EXTERNAL RELATIONS			
CONSTRUCTION			
RFDS REV			

PROJECT DESCRIPTION

MOBILITIE PROPOSES TO ATTACH A NEW PERSONAL WIRELESS SERVICE FACILITY TO A "NEW" GALVANIZED STEEL STREET LIGHT POLE LOCATED WITHIN THE EXISTING ROW. THE SCOPE WILL CONSIST OF THE FOLLOWING:

- REMOVE (E) (26'-3" AGL) METAL (PUC) STREET LIGHT POLE & REPLACE WITH (N) (28'-6" AGL) GALVANIZED STEEL STREET LIGHT POLE WITH 6' LUMINAIRE ARM.
- REMOVE (E) CONCRETE POLE FOUNDATION AND REPLACE WITH (N) 2'-6" DIA. x 5'-6" CONCRETE POLE FOUNDATION AT SAME LOCATION.
- INSTALL ONE (1)-10.75" DIA. x 64.375" TALL ANTENNA SHROUD / HOUSING WITH (1)-4.5" DIA. x 29.5" TALL OMNI-DIRECTIONAL ANTENNA.
- INSTALL ONE (1)-7" DIA. x 13" TALL UE RELAY, (1)-9.7" TALL x 12.9" WIDE x 6.3" DEEP NOKIA RADIO HOUSED INSIDE (1)-35" TALL x 15.9" WIDE x 9" DEEP (MMS) SHROUD ENCLOSURE.
- PROPOSED FACILITY WILL NOT EMIT ANY SOUND.

ENGINEERING

- 2015 INTERNATIONAL BUILDING CODE
- 2017 NATIONAL ELECTRICAL CODE
- TIA/EIA-222-G-2 OR LATEST EDITION
- LOCAL BUILDING/PLANNING CODE
- GENERAL ORDER 95 "CA ONLY"
- GENERAL ORDER 95 "CA ONLY"

DRAWING INDEX

DESIGN TEAM

MOBILITIE
2955 RED HILL AVE,
COSTA MESA, CA 92626
PM: SYLVETTE CUEZON
PM: (562) 202-0165
PM: sylvette.cuezon@mobilitie.com

811 Dig Alert
Know what's below. Call before you dig.
CALIFORNIA NORTH
Call Two Working Days Before You Dig!
1-800-STAKE IT

mobilitie structure

CES cable engineering services
10640 Sepulveda Blvd. Suite 1, Mission Hills, CA 91345
Phone No.: (818)898-2352 Fax No.: (818)898-8186
A&E SERVICES

DRAWN BY:	MD
CHECKED BY:	JM

REV	DATE	DESCRIPTION
10	04/27/18	REVISED NEW POLE MATERIAL & ADDED ZONING DISTRICT
9	03/16/18	REVISED ADDRESS
8	01/25/18	REVISED PER NEW SFPUC COMMENTS
7	11/28/17	ADDED POLE & FOUNDATION REPLACEMENT DETAILS
6	11/06/17	REVISED LOAD SCHEDULE
5	10/16/17	ADDED POINT OF CONNECTION PLAN & PUC COMMENTS
4	05/25/17	REVISED ACCESS OPENING SIZE
3	04/07/17	UPDATED EQUIPMENT
2	02/09/17	UDATED PER JX COMMENTS
1	01/30/17	REVISED EQUIPMENT SPECIFICATIONS
0	11/17/16	90% CD'S FOR REVIEW

SITE ID:
9CAB007733
SITE NAME: SF90XS701B
NEAREST ADDRESS:
ADJACENT TO 1509 SHRADER ST., SAN FRANCISCO, CA 94117

SHEET TITLE
TITLE SHEET

SHEET NUMBER
T-1

DISCLAIMER:

PRIOR TO CONSTRUCTION GENERAL CONTRACTOR TO VERIFY CLEARANCES ARE MET FOR PLACEMENT OF NEW FACILITIES INCLUDING BUT NOT LIMITED TO EQUIPMENT, ANTENNAS, POWER CONDUITS, AND POLE PLACEMENT PER GOVERNING CODE. ENGINEER OF RECORD HAS NOT CONDUCTED A FIELD VERIFICATION, OR LAND SURVEY AND DOES NOT GUARANTEE ACCURACY OF SHOWN PROPERTY LINES, SUBSTRUCTURES, HARDSCAPE, HEIGHTS, AND OTHER ELEMENTS IN THE RIGHT-OF-WAY. ALL PROPERTY LINES, SUBSTRUCTURES, AND OTHER ELEMENTS ARE SHOWN PER CITY AND COUNTY GIS MAPS, FACILITY MAPS, AND PLAT MAPS. CONTRACTOR TO STOP WORK AND NOTIFY ENGINEER OF RECORD IMMEDIATELY IF ANY DISCREPANCIES ARE OBSERVED THAT WILL INTERFERE WITH INSTALLATION OF NEW FACILITY

EQUIPMENT SCHEDULE

QTY.	DESCRIPTION	DIMENSIONS	WEIGHT
1	ANTENNA MODEL #AW3477-S1-C (OMNI DIRECTIONAL ANTENNA)	29.5" x 4.5"Ø	7 LBS
1	CONCEALFAB ANTENNA SHROUD	47.375" x 17" x 10.75"Ø	16.11 LBS
1	(MMS) SHROUD ENCLOSURE	35" x 15.5" x 9"	12 LBS
1	AIRSPAN IR460 (UE RELAY)	13" x 7"Ø	8.8 LBS
1	NOKIA RADIO (B41 FWHR) HIGH POWER	7.7" x 12.9" x 6.3"	24.64 LBS
3	FANS (2 SMALL, 1 LARGER)		2.76 LBS
	TOTAL WEIGHT		71.31 LBS

MAKE-READY NOTES:

INSTALL (1) (N) OMNI DIRECTIONAL ANTENNA CENTERED @ TOP OF POLE
INSTALL (1) (N) UE RELAY AND (1) (N) NOKIA RADIO INSIDE (MMS) SHROUD ENCLOSURE @ 12:00 POSITION

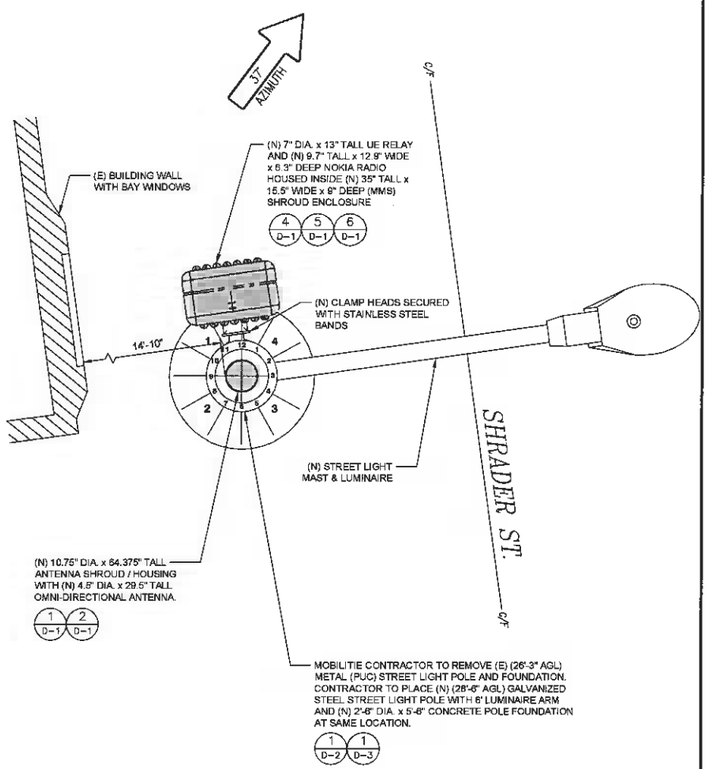

MAKE-READY NOTES/RISER DIAGRAM

24"x36" SCALE: NTS
11"x17" SCALE: NTS

2

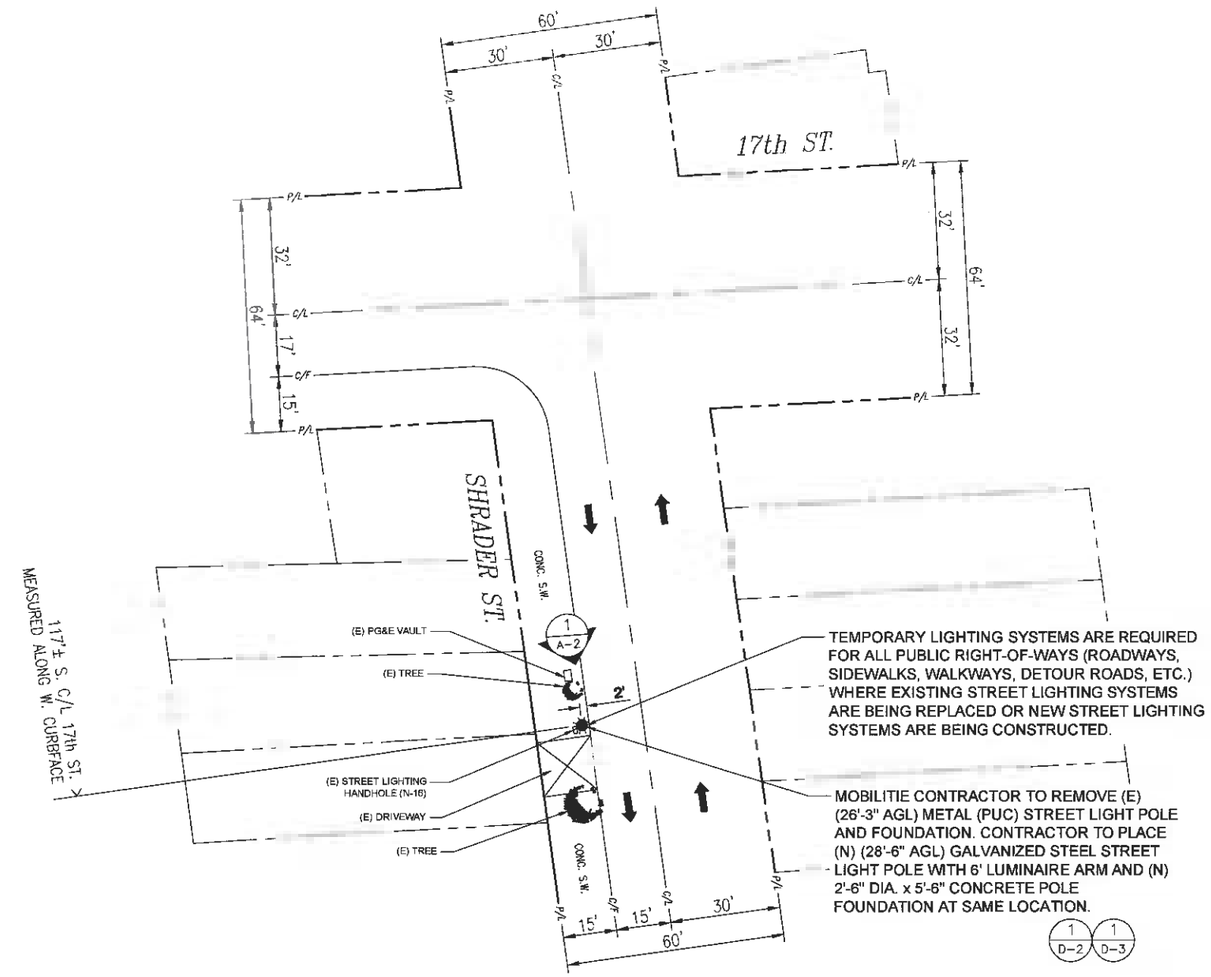

SYMBOLOGY

SYMBOL	DESCRIPTION	SYMBOL	DESCRIPTION	SYMBOL	DESCRIPTION
EOD	EDGE OF DIRT		EXISTING CUT		ANCHOR
WL	WHITE LINE		FENCE		FIRE HYDRANT
ROW	RIGHT OF WAY		WALL		UTILITY VALVE
EOP	EDGE OF PAVEMENT		DRIVEWAY		UTILITY MANHOLE
C/L	CENTER LINE		BUSHES		SEWER MANHOLE
C/F	CURBFACE		TREE		SQUARE VENT
P/L	PROPERTY LINE		UTILITY POLE		ROUND VENT
(E)	EXISTING		STREET LIGHT		DIG-ALERTE
(N)	NEW		PROPOSED SITE POLE		TRAFFIC FLOW
	CONDUIT CURVE DATA		PARKING METER/STREET SIGN		ADA CURB RAMP
	SPOT ELEVATION	1 A-2	DETAIL REFERENCE		

SITE PLAN

24"x36" SCALE: 1" = 20'-0"
11"x17" SCALE: 1" = 40'-0"

20' 10' 0' 20'

1

mobilitie
ucture

CeS cable engineering services

10840 Sepulveda Blvd. Suite 1, Mission Hills, CA 91345
Phone No.: (818)898-2352 Fax No.: (818)898-9186

A&E SERVICES

DRAWN BY:	MD
CHECKED BY:	JM

REV	DATE	DESCRIPTION
10	04/27/18	REVISED NEW POLE MATERIAL & ADDED ZONING DISTRICT
9	03/16/18	REVISED ADDRESS
8	01/25/18	REVISED PER NEW SFPUC COMMENTS
7	11/28/17	ADDED POLE & FOUNDATION REPLACEMENT DETAILS
6	11/08/17	REVISED LOAD SCHEDULE
5	10/16/17	ADDED POINT OF CONNECTION PLAN & PUC COMMENTS
4	05/25/17	REVISED ACCESS OPENING SIZE
3	04/07/17	UPDATED EQUIPMENT
2	02/09/17	UDATED PER JX COMMENTS
1	01/30/17	REVISED EQUIPMENT SPECIFICATIONS
0	11/17/16	90% CD'S FOR REVIEW

SITE ID:
9CAB007733
SITE NAME: SF90XS701B

NEAREST ADDRESS:
ADJACENT TO 1509 SHRADER ST., SAN FRANCISCO, CA 94117

SHEET TITLE
SITE PLAN / RISER DIAGRAM

SHEET NUMBER
A-1

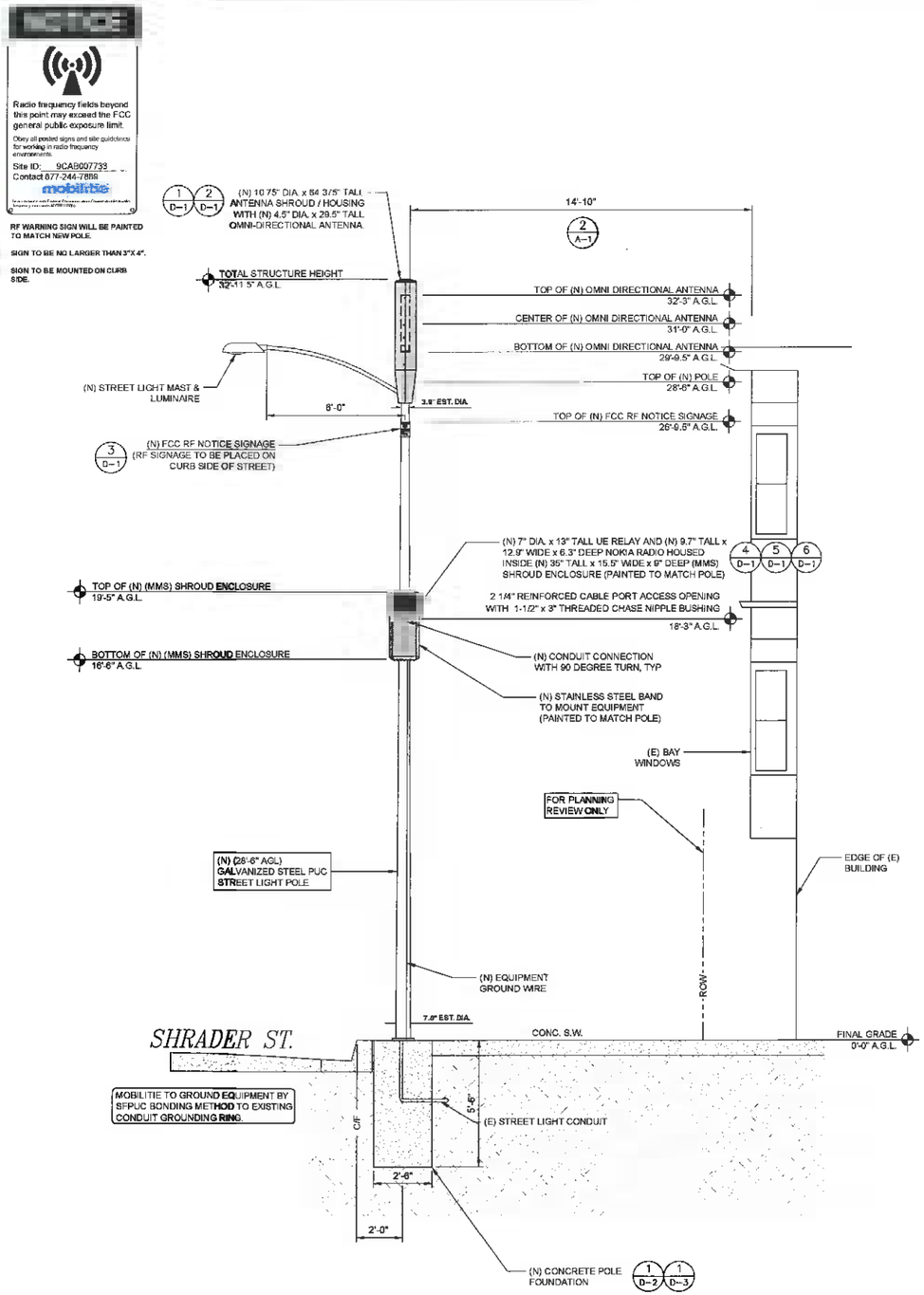

SIDE VIEW
LOOKING SOUTH

(N) ELEVATION

24"x36" SCALE: 1" = 3'-0"
11"x17" SCALE: 1" = 6'-0"
3' 0" 1.5' 3'

2

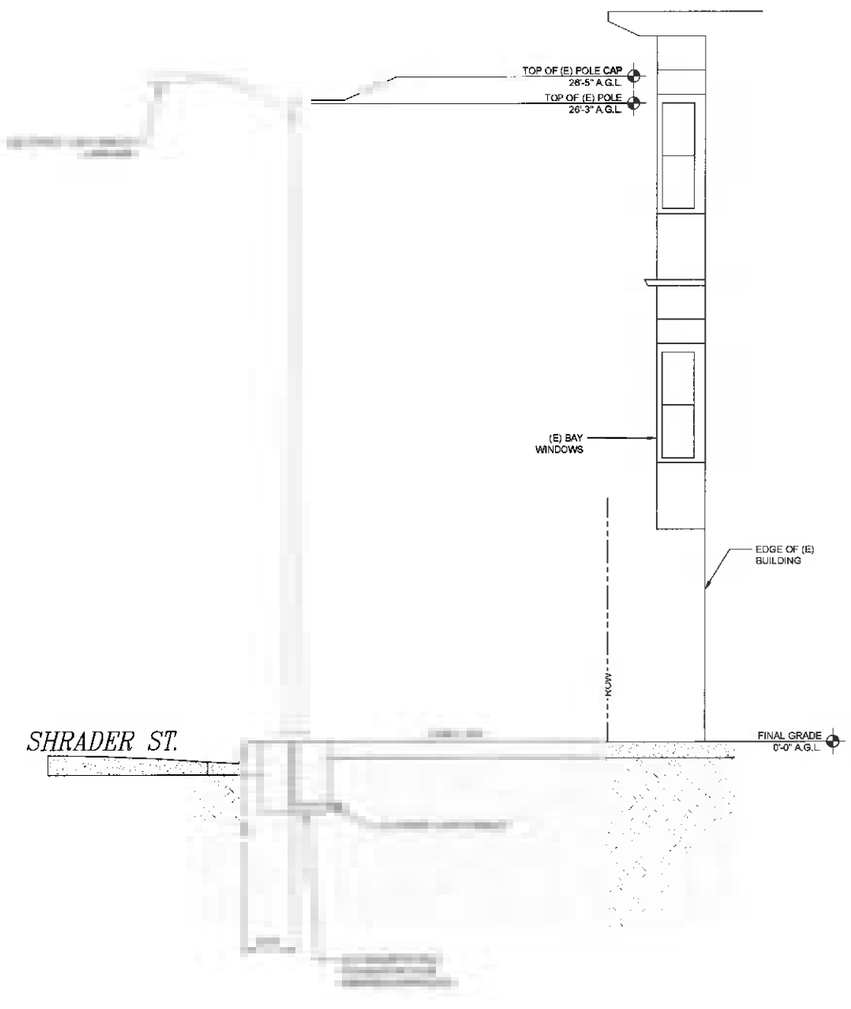

SIDE VIEW
LOOKING SOUTH

(E) ELEVATION

24"x36" SCALE: 1" = 3'-0"
11"x17" SCALE: 1" = 6'-0"
3' 0" 1.5' 3'

1

mobilitie
structure

CES cable engineering services
10640 Sepulveda Blvd. Suite 1, Mission Hills, CA 91345
Phone No.: (818)896-2352 Fax No.: (818)896-9196

A&E SERVICES

DRAWN BY:	MD
CHECKED BY:	JM

REV	DATE	DESCRIPTION
10	04/27/18	REVISED NEW POLE MATERIAL & ADDED ZONING DISTRICT
9	03/16/18	REVISED ADDRESS
8	01/25/18	REVISED PER NEW SFPUC COMMENTS
7	11/28/17	ADDED POLE & FOUNDATION REPLACEMENT DETAILS
6	11/08/17	REVISED LOAD SCHEDULE
5	10/18/17	ADDED POINT OF CONNECTION PLAN & PUC COMMENTS
4	05/25/17	REVISED ACCESS OPENING SIZE
3	04/07/17	UPDATED EQUIPMENT
2	02/09/17	UDATED PER JK COMMENTS
1	01/30/17	REVISED EQUIPMENT SPECIFICATIONS
0	11/17/16	90% CD'S FOR REVIEW

SITE ID:
9CAB007733
SITE NAME: SF90XS701B

NEAREST ADDRESS:
ADJACENT TO 1509 SHRADER ST., SAN FRANCISCO, CA 94117

SHEET TITLE

ELEVATIONS

SHEET NUMBER

A-2

NOTES:

- ONLY FLEX CONDUITS ARE TO BE USED FOR CABLE INSTALLATION.
- ONLY 90 DEGREE DIN CONNECTORS ARE TO BE INSTALLED.
- 1-1/2" X 3" THREADED CHASE NIPPLE. ALLOWS FOR PASSAGE OF CABLING FROM POLE INTERNAL TO SHROUD INTERNAL.
- WEATHER PROOF/WATER TIGHT CHASE NIPPLES ARE TO BE USED ON CABLE ACCESS PORT OPENINGS. (CHASE NIPPLE TO BE SAME COLOR AS EXIST. POLE)
- GC WILL DRILL OUT 2 1/4" HOLE IN POLE BODY AT LOCATION SHROUD WILL BE MOUNTED, AND INSTALL THE CHASE NIPPLE CONDUIT INTO THE HOLE WITH BUSHINGS.
- CHASE NIPPLE CONDUIT: ALLOWS FOR PASSAGE OF CABLING FROM POLE INTERNAL TO SHROUD INTERNAL.

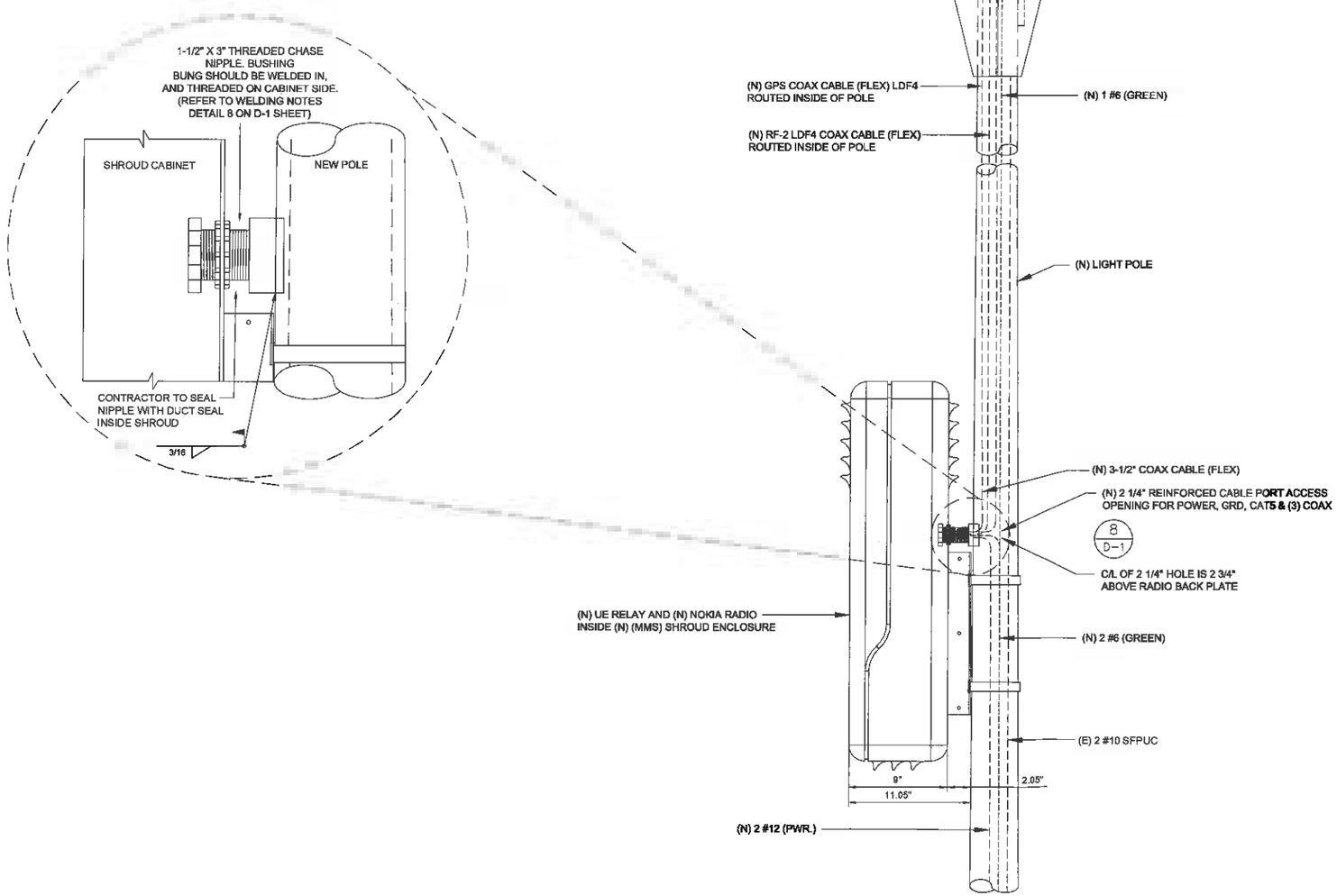

PROPOSED SUN SHIELD / CONDUIT ROUTING

24"x36" SCALE: NTS
11"x17" SCALE: NTS

1

mobilitie
nucture

cable engineering services

10640 Sepulveda Blvd. Suite 1, Mission Hills, CA 91345
Phone No.: (818)898-2352 Fax No.: (818)898-9166

A&E SERVICES

DRAWN BY:	MD
CHECKED BY:	JM

REV	DATE	DESCRIPTION
10	04/27/18	REVISED NEW POLE MATERIAL & ADDED ZONING DISTRICT
9	03/16/18	REVISED ADDRESS
8	01/25/18	REVISED PER NEW SFPUC COMMENTS
7	11/28/17	ADDED POLE & FOUNDATION REPLACEMENT DETAILS
6	11/06/17	REVISED LOAD SCHEDULE
5	10/16/17	ADDED POINT OF CONNECTION PLAN & PUC COMMENTS
4	05/25/17	REVISED ACCESS OPENING SIZE
3	04/07/17	UPDATED EQUIPMENT
2	02/09/17	UDATED PER JX COMMENTS
1	01/30/17	REVISED EQUIPMENT SPECIFICATIONS
0	11/17/16	90% CD'S FOR REVIEW

SITE ID:
9CAB007733
SITE NAME: SF90XS701B

NEAREST ADDRESS:
ADJACENT TO 1509 SHRADER ST., SAN FRANCISCO, CA 94117

SHEET TITLE
SUN SHIELD / CONDUIT ROUTING DETAIL

SHEET NUMBER
A-3

PUC CONDUIT WIRE SCHEDULE

SCHEDULE A:
CONDUIT SIZE: 1.5"
CITY: (E) (2) #10
MOBILITIE: (N) (2) #12 POWER AND (N) (2) #6 GROUND (GREEN)

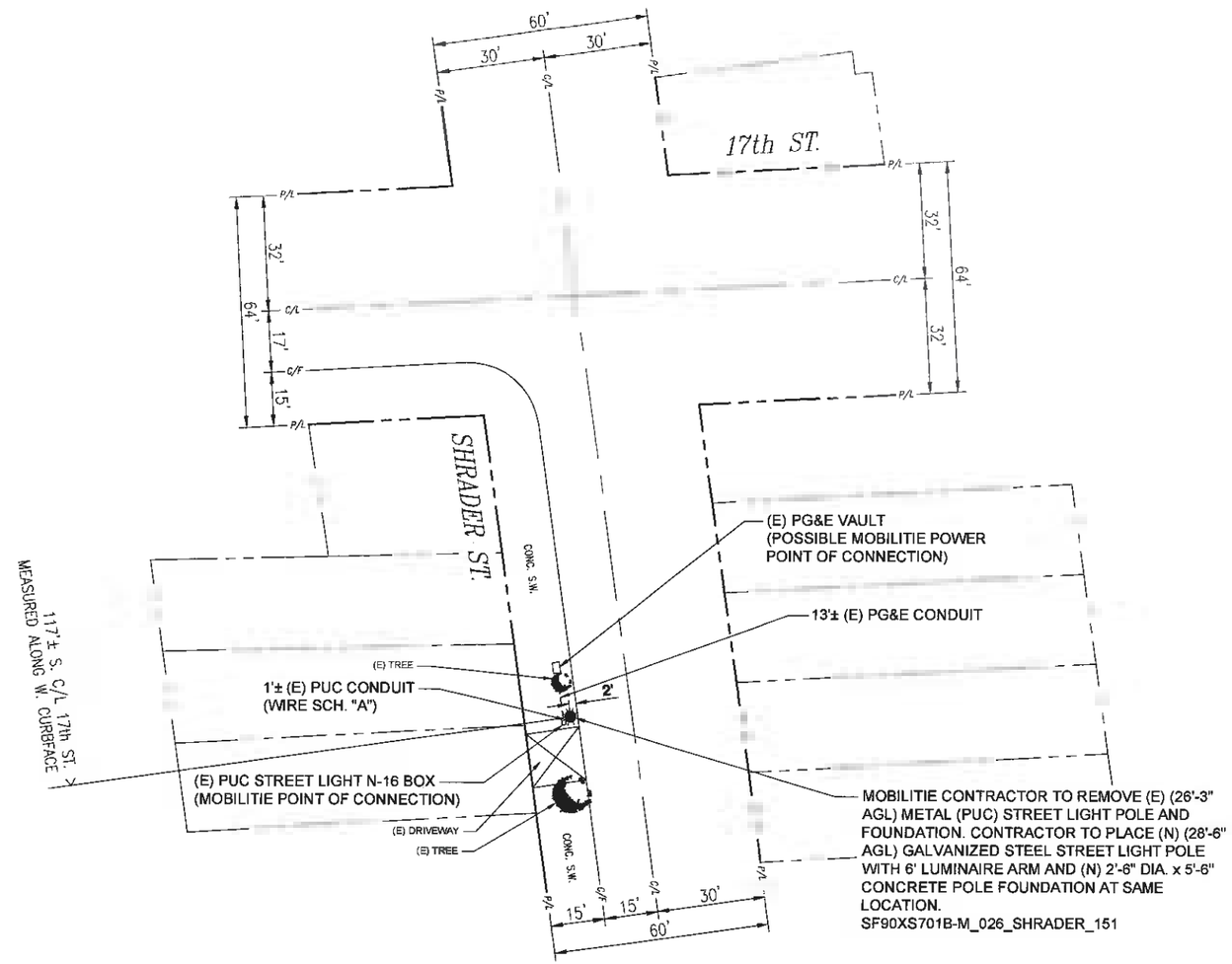

N
W E
S

PUC POINT OF CONNECTION PLAN

24"x36" SCALE: 1" = 20'-0"
11"x17" SCALE: 1" = 40'-0"
20' 10' 0' 20'

1

mobilitie
structure

CES cable engineering services

10640 Sepulveda Blvd. Suite 1, Mission Hills, CA 91345
Phone No.: (818)898-2352 Fax No.: (818)898-6186

A&E SERVICES

DRAWN BY:	MD
CHECKED BY:	JM

REV	DATE	DESCRIPTION
10	04/27/18	REVISED NEW POLE MATERIAL & ADDED ZONING DISTRICT
9	03/16/18	REVISED ADDRESS
8	01/25/18	REVISED PER NEW SFPUC COMMENTS
7	11/28/17	ADDED POLE & FOUNDATION REPLACEMENT DETAILS
6	11/08/17	REVISED LOAD SCHEDULE
5	10/16/17	ADDED POINT OF CONNECTION PLAN & PUC COMMENTS
4	05/25/17	REVISED ACCESS OPENING SIZE
3	04/07/17	UPDATED EQUIPMENT
2	02/09/17	UDATED PER JX COMMENTS
1	01/30/17	REVISED EQUIPMENT SPECIFICATIONS
0	11/17/16	90% CD'S FOR REVIEW

SITE ID:
9CAB007733
SITE NAME: SF90XS701B

NEAREST ADDRESS:
ADJACENT TO 1609 SHRADER ST., SAN FRANCISCO, CA 94117

SHEET TITLE
PUC POINT OF CONNECTION PLAN

SHEET NUMBER
A-4

CONDUIT SCHEDULE			
MARK	CONDUIT SIZE	WIRES	CONDUIT FILL %
SCHEDULE A	EXISTING 1.5" PUC CONDUIT	CITY: (E) 2 #10 MOBILITIE: (N) (2) #12 POWER, (N) (2) #6 GROUND (GREEN)	±8.3%

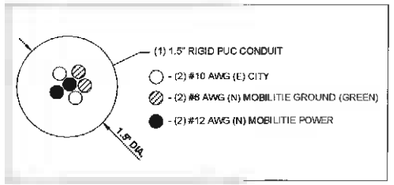

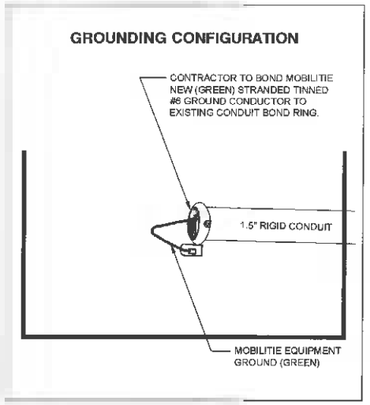

LOAD SCHEDULE					
UNIT	SUB DESCRIPTION	MAX POWER (W)	MAX CURRENT (A)	KVA	KWh/Yr
NSN - B41 HIGH	LTE BASE STATION	360	4	0.36	3153.6
AIRSPAN iR460	UE RELAY	N/A	N/A	N/A	N/A
AA1281HB-AWR2T	ENCLOSURE FAN	16.5	0.19	0.0165	144.54
(2) AA1251MB-AT	ENCLOSURE FANS	37.8	0.4	0.0378	329.378
TOTAL		414.1	4.6	0.4	3627.5

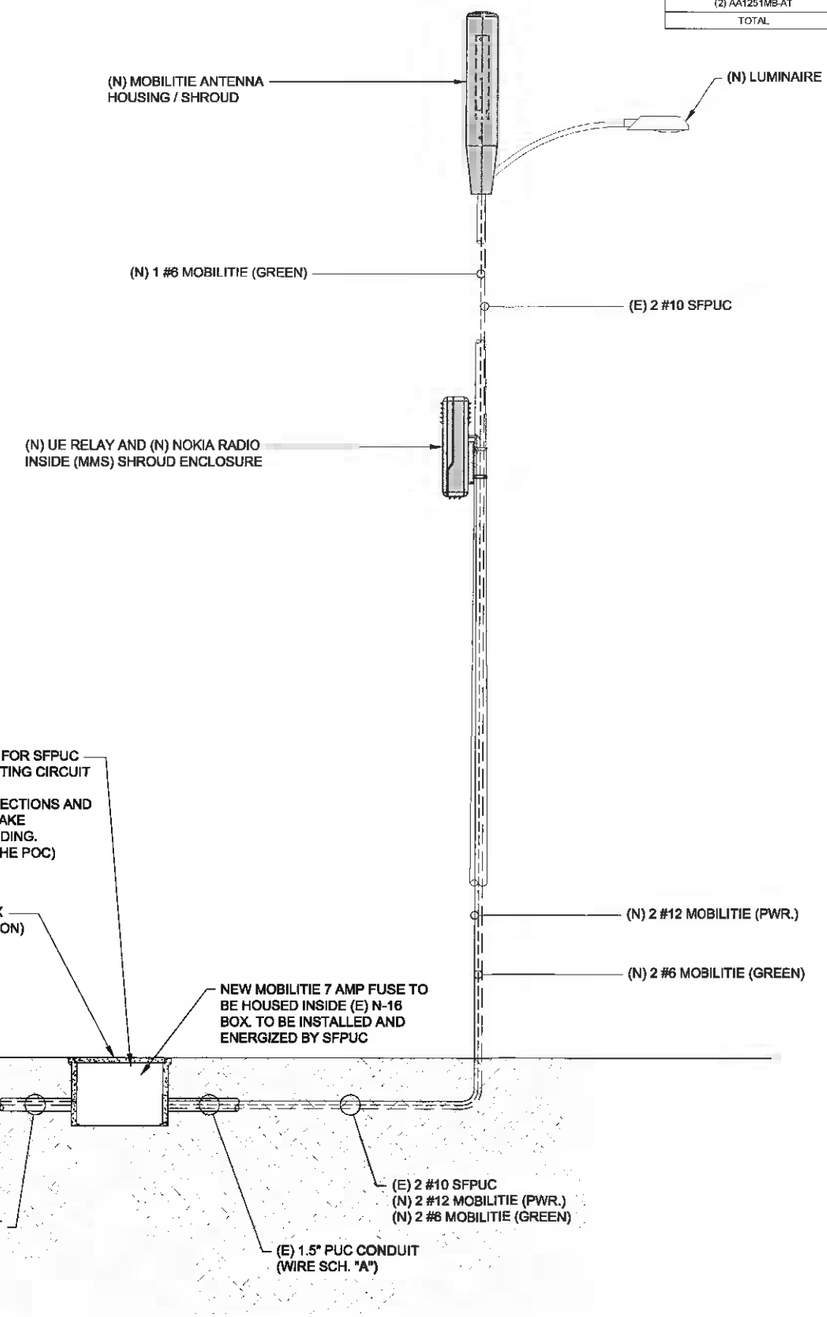

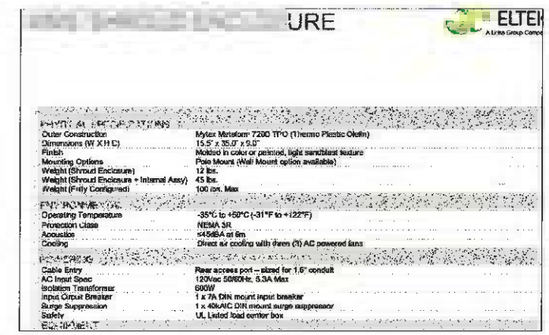

Outer Construction	Mytex Metaform 7200 TPO (Thermo Plastic Olefin)
Dimensions (W X H X D)	15.5" x 35.0" x 5.0"
Finish	Molded in color or painted, light sandblast texture
Mounting Options	Pole Mount (Wall Mount option available)
Weight (Shroud Enclosure)	12 lbs.
Weight (Shroud Enclosure + Internal Assy)	45 lbs.
Weight (Fully Configured)	100 lbs. Max
Operating Temperature	-35°C to +50°C (-31°F to +122°F)
Protection Class	NEMA 3R
Acoustic	≤45dBA at 6m
Cooling	Direct air cooling with three (3) AC powered fans
Cable Entry	Rear access port – sized for 1.6" conduit
AC Input Spec	120Vac 50/60Hz, 5.3A Max
Isolation Transformer	600W
Input Circuit Breaker	1 x 7A DIN mount input breaker
Surge Suppression	1 x 40kAIC DIN mount surge suppressor
Safety	UL Listed load center box

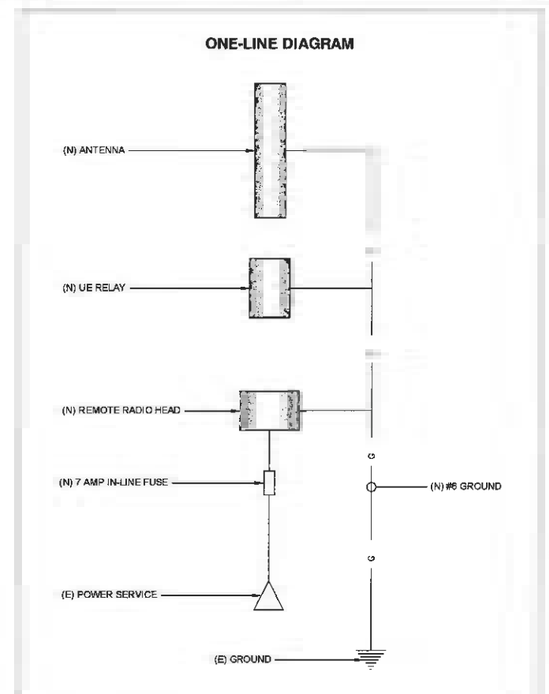

mobilitie nucure

cable engineering services

10840 Sepulveda Blvd. Suite 1, Mission Hills, CA 91345
Phone No.: (818)898-2352 Fax No.: (818)898-9186

A&E SERVICES

DRAWN BY:	MD
CHECKED BY:	JM

REV	DATE	DESCRIPTION
10	04/27/18	REVISED NEW POLE MATERIAL & ADDED ZONING DISTRICT
9	03/16/18	REVISED ADDRESS
8	01/25/18	REVISED PER NEW SFPUC COMMENTS
7	11/29/17	ADDED POLE & FOUNDATION REPLACEMENT DETAILS
6	11/08/17	REVISED LOAD SCHEDULE
5	10/16/17	ADDED POINT OF CONNECTION PLAN & PUC COMMENTS
4	05/25/17	REVISED ACCESS OPENING SIZE
3	04/07/17	UPDATED EQUIPMENT
2	02/09/17	UDATED PER JX COMMENTS
1	01/30/17	REVISED EQUIPMENT SPECIFICATIONS
0	11/17/16	90% CD'S FOR REVIEW

SITE ID:
9CAB007733
SITE NAME: SF90XS701B

NEAREST ADDRESS:
ADJACENT TO 1509 SHRADER ST., SAN FRANCISCO, CA 94117

SHEET TITLE
PUC SINGLE LINE

SHEET NUMBER
A-5

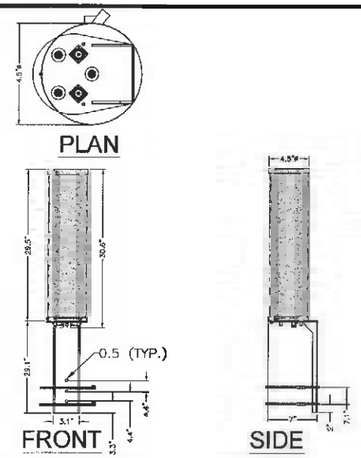

MANUFACTURER: ALPHA WIRELESS
MODEL: AW3477-S1-G
HEIGHT: 29.5 IN
DIAMETER: 4.5 IN Ø
WEIGHT: 7 LBS

ALPHA AW3477-S1-G OMNI (B41)

SCALE N.T.S. | 1

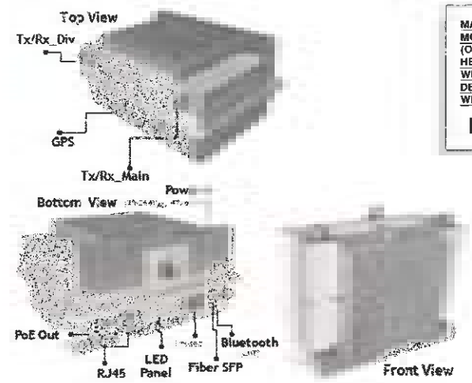

MANUFACTURER: NOKIA
MODEL: FWHR B41 HP (OR APPROVED EQUAL)
HEIGHT: 9.7 IN
WIDTH: 12.5 IN
DEPTH: 8.3 IN
WEIGHT: 24.7 LBS

NOKIA RADIO FWHR B41 HP

SCALE N.T.S. | 4

MANUFACTURER:		AIRSPAN
MODEL NO.:		IR460
DIMENSIONS:		UNIT WEIGHT:
A	13"	
B	7"Ø	8.8 LBS

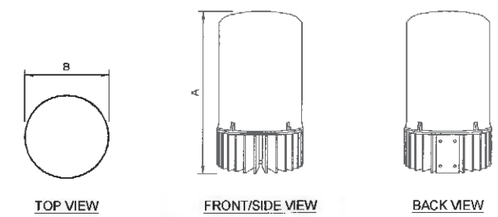

UE RELAY

SCALE N.T.S. | 6

MANUFACTURER:		CONCEALFAB
MODEL NO.:		007452-AABBCC
DIMENSIONS:		TOTAL WEIGHT:
A	47.375"	16.11 LBS
B	17"	
C	10.75" Ø	

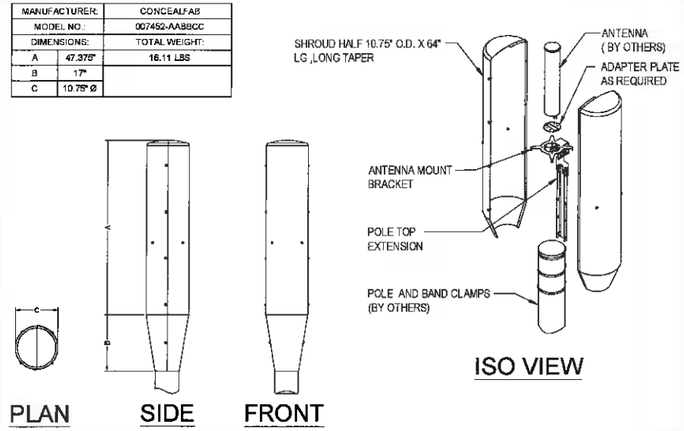

ANTENNA SHROUD

SCALE N.T.S. | 2

MANUFACTURER: ELTEK
HEIGHT: 35 IN
WIDTH: 15.5 IN
DEPTH: 9 IN
WEIGHT: 12 LBS

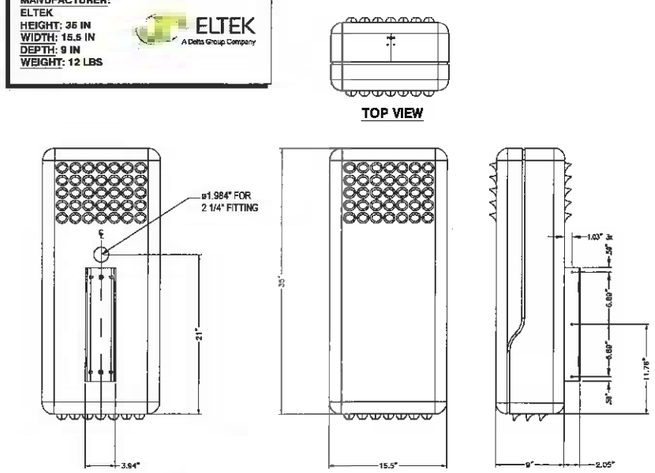

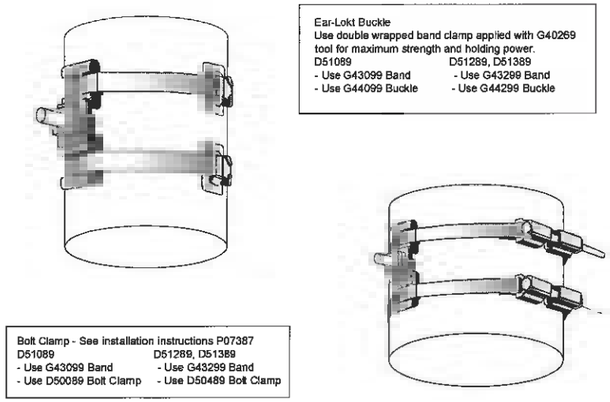

Ear-Lokt Buckle
Use double wrapped band clamp applied with G40269 tool for maximum strength and holding power.

D51089	D51289, D51389
- Use G43099 Band	- Use G43299 Band
- Use G44099 Buckle	- Use G44299 Buckle

Bolt Clamp - See installation instructions P07387

D51089	D51289, D51389
- Use G43099 Band	- Use G43299 Band
- Use D50089 Bolt Clamp	- Use D50489 Bolt Clamp

STAINLESS STEEL BANDS

SCALE N.T.S. | 7

(MMS) SHROUD ENCLOSURE

SCALE N.T.S. | 5

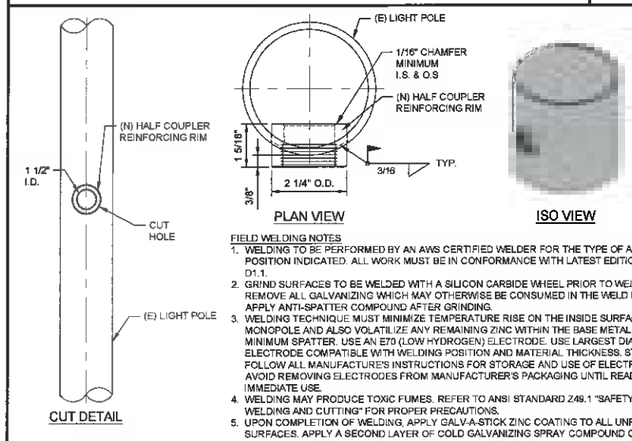

FIELD WELDING NOTES

1. WELDING TO BE PERFORMED BY AN AWS CERTIFIED WELDER FOR THE TYPE OF AND POSITION INDICATED. ALL WORK MUST BE IN CONFORMANCE WITH LATEST EDITION OF AWS D1.1.
2. GRIND SURFACES TO BE WELDED WITH A SILICON CARBIDE WHEEL PRIOR TO WELDING TO REMOVE ALL GALVANIZING WHICH MAY OTHERWISE BE CONSUMED IN THE WELD METAL. APPLY ANTI-SPATTER COMPOUND AFTER GRINDING.
3. WELDING TECHNIQUE MUST MINIMIZE TEMPERATURE RISE ON THE INSIDE SURFACE OF THE MONOPOLE AND ALSO VOLATILIZE ANY REMAINING ZINC WITHIN THE BASE METAL WITH MINIMUM SPATTER. USE AN E70 (LOW HYDROGEN) ELECTRODE. USE LARGEST DIAMETER ELECTRODE COMPATIBLE WITH WELDING POSITION AND MATERIAL THICKNESS. STRICTLY FOLLOW ALL MANUFACTURE'S INSTRUCTIONS FOR STORAGE AND USE OF ELECTRODES. AVOID REMOVING ELECTRODES FROM MANUFACTURER'S PACKAGING UNTIL READY FOR IMMEDIATE USE.
4. WELDING MAY PRODUCE TOXIC FUMES. REFER TO ANSI STANDARD Z49.1 "SAFETY IN WELDING AND CUTTING" FOR PROPER PRECAUTIONS.
5. UPON COMPLETION OF WELDING, APPLY GALV-A-STICK ZINC COATING TO ALL UNPROTECTED SURFACES. APPLY A SECOND LAYER OF COLD GALVANIZING SPRAY COMPOUND CONTAINING A MINIMUM ZINC CONTENT OF 95%. IF NECESSARY, APPLY A FINAL COAT OF COMPATIBLE PAINT TO MATCH SURROUNDING SURFACES.

ACCESS PORT DETAIL

SCALE N.T.S. | 8

RF WARNING SIGN WILL BE PAINTED TO MATCH EXISTING POLE.

SIGN TO BE NO LARGER THAN 3"X 4".

SIGN TO BE MOUNTED ON CURB SIDE.

ANTENNA RF SIGNAGE

SCALE N.T.S. | 3

mobilitie

cable engineering services
10640 Sepulveda Blvd. Suite 1, Mission Hills, CA 91345
Phone No.: (818)898-2352 Fax No.: (818)898-8156
A&E SERVICES

DRAWN BY:	MD
CHECKED BY:	JM

REV	DATE	DESCRIPTION
10	04/27/18	REVISED NEW POLE MATERIAL & ADDED ZONING DISTRICT
9	03/16/18	REVISED ADDRESS
8	01/25/18	REVISED PER NEW SFPUC COMMENTS
7	11/29/17	ADDED POLE & FOUNDATION REPLACEMENT DETAILS
6	11/06/17	REVISED LOAD SCHEDULE
5	10/16/17	ADDED POINT OF CONNECTION PLAN & PUC COMMENTS
4	05/25/17	REVISED ACCESS OPENING SIZE
3	04/07/17	UPDATED EQUIPMENT
2	02/09/17	UDATED PER JX COMMENTS
1	01/30/17	REVISED EQUIPMENT SPECIFICATIONS
0	11/17/16	90% CD'S FOR REVIEW

SITE ID:
9CAB007733
SITE NAME: SF90XS701B

NEAREST ADDRESS:
ADJACENT TO 1509 SHRADER ST., SAN FRANCISCO, CA 94117

SHEET TITLE
EQUIPMENT DETAILS

SHEET NUMBER
D-1

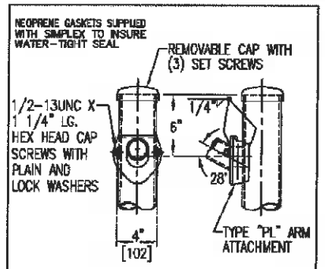

DETAIL E — ARM CONN. DETAIL

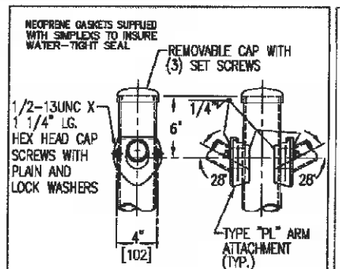

DETAIL F — DBL.ARM CONN. DETAIL

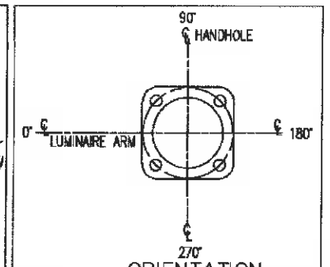

ORIENTATION

DETAIL G — FOR SINGLE ARM POLE

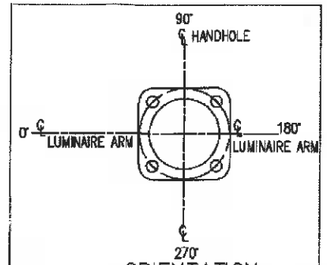

ORIENTATION

DETAIL H — FOR DOUBLE ARM POLE

DETAIL I

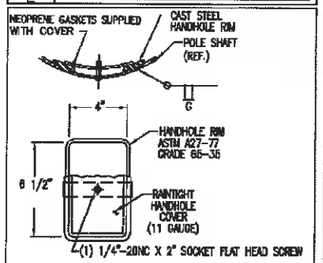

DETAIL C — FLUSH HANDHOLE DETAIL

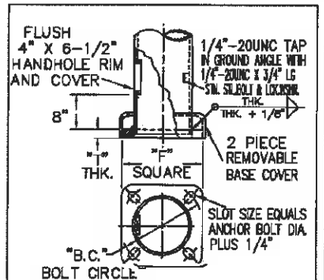

DETAIL B — BASEPLATE DETAIL

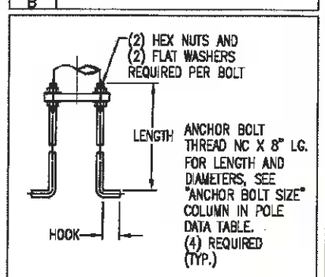

DETAIL A — ANCHOR BOLT DETAIL

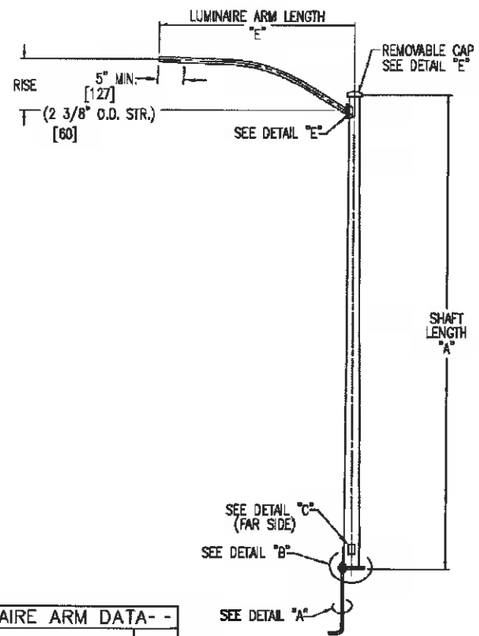

TYPE "PL" SNGL.

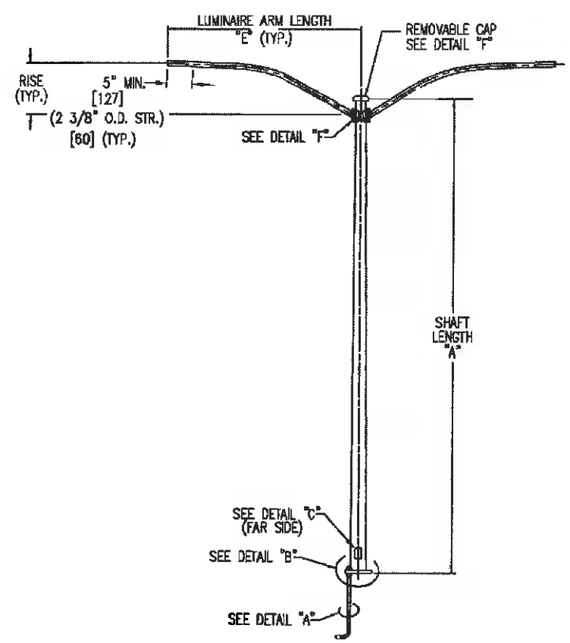

TYPE "PL"DBL.

- -LUMINAIRE ARM DATA- -

ARM LENGTH "E"	END O.D. X BASE O.D. X THICKNESS	RISE
4'-0"	2 3/8" X 3" X .120"	1'-3"
6'-0"	2 3/8" X 3 5/16" X .120"	1'-6"

- - POLE DATA - -

POLE DESCRIPTION	SHAFT LENGTH "A"	SHAFT DIMENSIONS TOP O.D. X BASE O.D.	MATERIAL BREAKDOWN .120" THK.	.179" THK.	.239" THK.	.3125" THK.	BASE SQ. "F"	BASE B.C. "C"	BASE THK. "D"	ANCHOR BOLT or ROD DIMENSIONS	ANCHOR BLT. SETTING BOLT CIRCLE
PL-25	25'-0"	3 13/16" X 7 5/16"	25'-0"	—	—	—	10 1/2"	10 1/2"	1"	1" X 42" X 4"*	10"
PL-28	28'-6"	3 13/16" X 7 3/4"	28'-6"	—	—	—	11 1/2"	11 1/2"	1"	1" X 42" X 4"*	11"

*IF FOUDATION IN UNPAVED AREA CONTRACTOR TO SUPPLY REQUIRED ANCHOR BOLT LENGTH.

- -GENERAL NOTES- -

MATERIAL SPECIFICATIONS	
SHAFT	STEEL OF 48 K.S.I. MINIMUM YIELD AFTER FABRICATION
BASEPLATES AND FLANGES	ASTM A-36
PIPE	ASTM A-53 GR. B or A-500 GR. B
ANCHOR BOLTS	ASTM F1554 GR. 55
MANUFACTURING PROCESSES	
BUTT WELDS	GROUND FLUSH WITH BASE METAL
LONGITUDINAL WELDS	BUTT WELDED BY THE ELECTRICAL RESISTANCE WELD PROCESS
CIRCUMFERENTIAL WELDS	BUTT WELD WITH PERMANENT BACK-UP RING
FINISH COATING	
STRUCTURE	HOT DIP GALVANIZE PER ASTM A-123
HARDWARE	HOT DIP GALVANIZE PER ASTM A-153
DESIGN CRITERIA	
STRUCTURE AND HARDWARE	IN ACCORDANCE WITH THE "SPECIFICATIONS FOR STRUCTURAL SUPPORTS OF HIGHWAY SIGNS, LUMINAIRES AND TRAFFIC SIGNALS," AASHTO 2001 w/INTERIMS THRU 2006
WELDING	IN ACCORDANCE WITH LATEST EDITION OF AWS D1.1 WELDING CODE

NOTES:

ORDERING NOMENCLATURE

SHAFT LENGTH — ADD LETTER "D" DOUBLE ARM

PL-2860

POLE TYPE — LUM. ARM

REV	DATE	DESCRIPTION	BY	APPR
D	6/13	RISE LMA 1'-6" PER CUST.	MHM	GM
C	4/13	REV. RISE ON LMA TO 2'-0"	MHM	GM
B	4/13	ADD 4" LUM ARM	BB	MHM
A	11/12	REV. RISE ON LMA TO 1'-6"	MHM	GM

Ameron POLE PRODUCTS DIVISION

CITY OF SAN FRANCISCO
"PL" SERIES LIGHTING

DRAWN : JB	DATE : 2/11	SCALE N.T.S.	DWG. NO. SF1101	REV. D
APPR : RD	DATE : 2/11			

mobilitie structure

CES cable engineering services

10640 Sepulveda Blvd. Suite 1, Mission Hills, CA 91345
Phone No.: (818)898-2352 Fax No.: (818)898-9188

A&E SERVICES

DRAWN BY: MD
CHECKED BY: JM

REV	DATE	DESCRIPTION
10	04/27/18	REVISED NEW POLE MATERIAL & ADDED ZONING DISTRICT
9	03/16/18	REVISED ADDRESS
8	01/25/18	REVISED PER NEW SFPUC COMMENTS
7	11/29/17	ADDED POLE & FOUNDATION REPLACEMENT DETAILS
6	11/08/17	REVISED LOAD SCHEDULE
5	10/16/17	ADDED POINT OF CONNECTION PLAN & PUC COMMENTS
4	05/25/17	REVISED ACCESS OPENING SIZE
3	04/07/17	UPDATED EQUIPMENT
2	02/09/17	UDATED PER JX COMMENTS
1	01/30/17	REVISED EQUIPMENT SPECIFICATIONS
0	11/17/16	90% CD'S FOR REVIEW

IT IS A VIOLATION OF LAW FOR ANY PERSON, UNLESS THEY ARE ACTING UNDER THE DIRECTION OF A LICENSED PROFESSIONAL ENGINEER, TO ALTER THIS DOCUMENT

SITE ID:
9CAB007733
SITE NAME: SF90XS701B

NEAREST ADDRESS:
ADJACENT TO 1509 SHRADER ST., SAN FRANCISCO, CA 94117

SHEET TITLE
POLE REPLACEMENT DETAILS

SHEET NUMBER
D-2

POLE REPLACEMENT DETAILS

SCALE N.T.S. | 1

SHEET NOTES:

1. GROUND STUD (WELDED TO INTERIOR SURFACE OF SHAFT OPPOSITE DOOR OPENING). STUD SHALL BE 1/4" X 20 (CONTINUOUSLY THREADED) X $\frac{3}{4}$" LONG AND BE FURNISHED WITH A TYPE 316 STAINLESS STEEL NUT AND A STAINLESS STEEL SHAKEPROOF WASHER.
2. FOR SHAFTS OF 25 FOOT OR LESS IN LEGTH, THE BOLT CIRCLE SHALL BE 10", UNLESS OTHERWISE NOTED. FOR SHAFTS MORE THAN 25 FOOT IN LENGHT, THE BOLT CIRCLE DIAMETER SHALL BE 11".
3. PROVIDE NEOPRENE GASKET FOR BRACKET PLATE TO INSURE WATER-TIGHT SEAL.

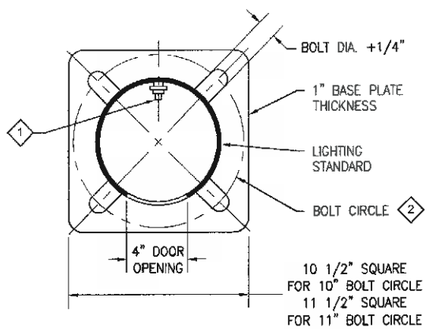

PLAN OF STANDARD ANCHOR BASE

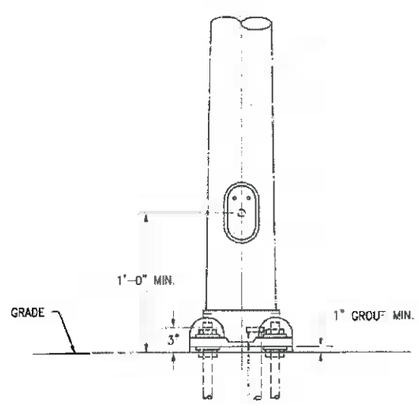

SIDE ELEVATION

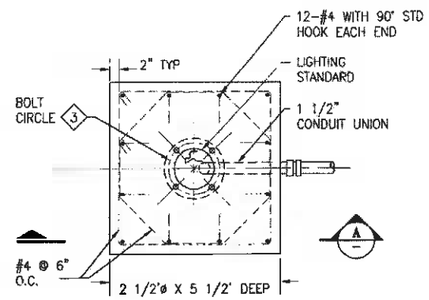

PLAN

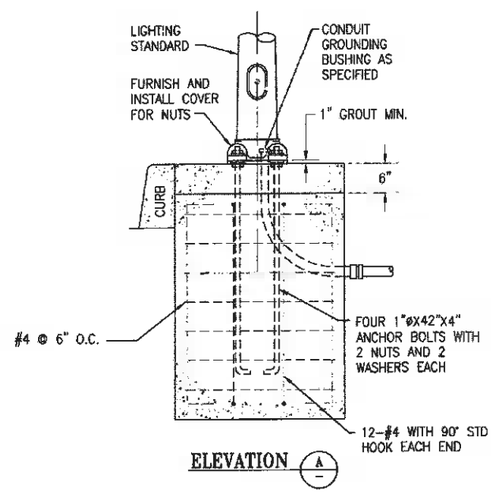

ELEVATION

FOUNDATION FOR STREET LIGHT IN SIDEWALK AREA

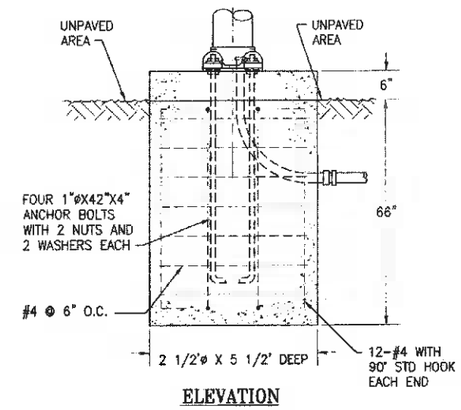

ELEVATION

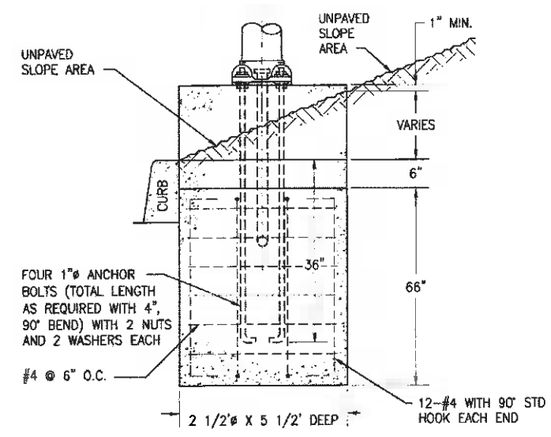

ELEVATION

FOUNDATION FOR STREET LIGHT IN UNPAVED AREA

POLE FOUNDATION DETAILS

SCALE	
N.T.S.	1

mobilitie structure

CES cable engineering services

10840 Sepulveda Blvd. Suite 1, Mission Hills, CA 91345
Phone No.: (818)898-2352 Fax No.: (818)686-9156

A&E SERVICES

DRAWN BY:	MD
CHECKED BY:	JM

REV	DATE	DESCRIPTION
10	04/27/18	REVISED NEW POLE MATERIAL & ADDED ZONING DISTRICT
9	03/16/18	REVISED ADDRESS
8	01/25/18	REVISED PER NEW SFPUC COMMENTS
7	11/29/17	ADDED POLE & FOUNDATION REPLACEMENT DETAILS
6	11/08/17	REVISED LOAD SCHEDULE
5	10/18/17	ADDED POINT OF CONNECTION PLAN & PUC COMMENTS
4	05/25/17	REVISED ACCESS OPENING SIZE
3	04/07/17	UPDATED EQUIPMENT
2	02/09/17	UDATED PER JX COMMENTS
1	01/30/17	REVISED EQUIPMENT SPECIFICATIONS
0	11/17/16	90% CD'S FOR REVIEW

SITE ID:
9CAB007733
SITE NAME: SF90XS701B

NEAREST ADDRESS:
ADJACENT TO 1609 SHRADER ST., SAN FRANCISCO, CA 94117

SHEET TITLE
POLE FOUNDATION DETAILS

SHEET NUMBER
D-3

BRIEF(S) SUBMITTED BY RESPONDENT DEPARTMENT(S)

November 8, 2018

London N. Breed
Mayor

Mohammed Nuru
Director

Jerry Sanguinetti
Manager

Street Use and Mapping
1155 Market St., 3rd floor
San Francisco, CA 94103
tel 415-554-5810

sfpublicworks.org
facebook.com/sfpublicworks
twitter.com/sfpublicworks

President Frank Fung
Vice President Rick Swig
Commissioner Darryl Honda
Commissioner Ann Lazarus
Commissioner Rachael Tanner
City and County of San Francisco
Board of Appeals
1650 Mission Street, Suite 304
San Francisco, CA 94103

Re: Appeal No. 18-130
Public Works Permit No. 18WR-0033

Dear President Fung, Vice President Swig, and Commissioners Honda, Lazarus, and Tanner:

Public Works submits this opposition to Appeal No. 18-130 filed by Appellant Neighbors of Upper Cole Valley concerning Personal Wireless Service Facility Site Permit No. 18WR-00333 ("Permit") issued to Mobilitie under Article 25 of the Public Works Code. The Permit authorized Mobilitie to install a Personal Wireless Service Facility ("Wireless Facility") near 1509 Shrader Street.

INTRODUCTION

Public Works appropriately approved the Permit because it followed the proper procedures and correctly applied the standards of Public Works Code Article 25 ("Article 25").

Article 25 authorizes Public Works to issue Personal Wireless Service Facility Site Permits allowing the permittees to install Personal Wireless Service Facilities on existing utility, streetlight, and transit poles. Article 25 requires Public Works to issue tentative approvals of Personal Wireless Service Facility Site Permits. (*See* Public Works Code §§ 1511(a), (c).) If protests are filed following public notice of a tentative approval, Public

Works will hold a hearing on those protests. The hearing officer will then issue a recommendation to the Director of Public Works and the Director will issue an order either approving or denying the application. (*See* Public Works Code §§ 1512, 1513.)

All of those events occurred here. After Mobilitie submitted its application for Permit No. 18WR-0033 ("Application"), Public Works referred the Application to the Planning Department and the Department of Public Health. The Planning Department recommended approval. (*See* Planning Department letter dated October 11, 2017 (Exhibit ("Exh.") A).) The Department of Public Health ("DPH") found that the proposed Wireless Facility would meet the Public Health Compliance Standard. (*See* Department of Public Health letter dated April 24, 2018 (Exh. B).) As a result, on May 25, 2018 Public Works issue a Tentative Approval of the Application (Exh. C).) Mobilitie then mailed and posted the Notice of the Tentative Approval. (*See* Declaration of Mailing Re: Notice of Tentative Approval of Application for a Personal Wireless Service Facility Site Permit (Exh. D); and Declaration of Posting Re: Posting of Notice of Tentative Approval of Application for a Personal Wireless Service Facility Site (Exh. E).) After neighbors protested the Tentative Approval, Public Works held a hearing. Following the hearing, the Director approved the Application and Public Works issued the Permit. (*See* Exh. F (Public Works Order No: 188346) and Exh. G (Public Works Permit No. 18WR-0033).)

SUMMARY OF ARGUMENT

Appellant seeks to overturn the Permit on six separate grounds. None of which support denial of the Permit. Public Works addresses each argument in turn:

First, Appellant argues that Mobilitie did not provide adequate notice of the Tentative Approval and adequate time to prepare for the hearing. The record does not support these contentions. Public Works properly relied on the sworn statements from the Mobilitie representatives that they complied with the notice requirements. Other evidence supports a finding that local residents received proper notice because four protests were timely filed with Public Works.

Second, Appellant argues that the notice of Tentative Approval was misleading because it did not sufficiently explain the full scope of the project, and it did not specifically point to the equipment box in the middle of the pole. A review of the record shows that each picture contained the equipment box and the notice sufficiently described the Wireless Facility.

Third, Appellant argues that the project involves a new pole. Mobilitie, however, will replace an existing streetlight pole; Mobilitie is not constructing a new streetlight nor adding a new utility pole on the block.

Fourth, Appellant claims that the proposed Wireless Facility and evidence supporting the claim will obstruct private views. The Planning Department analyzed this issue and found no view obstruction.

Fifth, Appellant argues that DPH incorrectly determined that the Application complies with Public Health Compliance Standard because DPH reviewed the wrong equipment. Appellant errs, because DPH analyzed the radio frequency ("RF") emissions from both antennas proposed to be on the pole and concluded that the proposed Wireless Facility would comply with Public Health Compliance Standard.

Sixth, Appellant raises a potpourri of policy arguments, but none provides a basis for the Board to grant the appeal and deny the Permit under Article 25.

Because Appellant raises no valid legal reason for denying the Permit, Public Works respectfully requests that the appeal be denied.

LEGAL STANDARD

Article 25 sets the criteria for granting a permit. This appeal must be denied if, among other things:1) the Planning Department correctly determined that the proposed Wireless Facility meets the applicable Compatibility Standards; 2) DPH correctly determined that the Application complied with the Public Health Compliance Standard; and 3) Mobilitie complied with all requirements for obtaining a Personal Wireless Service Facility

Permit. (Public Works Code § 1513(h).) This last requirement includes compliance with Article 25's notice requirements. (*See, e.g.*, Public Works Code § 1512.)

ARGUMENT

I. Public Works Properly Found that Mobilitie Complied with the Article 25 Notice Requirements.

Record evidence shows that Mobilitie complied with the notice requirements. Appellant's arguments to the contrary ignore the record evidence. (*Cf.* Brief at 3.)

Public Works Code section 1512 requires an applicant for a Personal Wireless Service Facility Site Permit to notify the public that Public Works has issued a tentative approval of the application. The required notice must: (i) be mailed to "[a]ny Person owning property or residing within one hundred and fifty (150) feet of the proposed location of the Personal Wireless Service Facility" and to "[a]ny neighborhood association identified by the Planning Department for any neighborhood within three hundred (300) feet of the proposed Personal Wireless Service Facility;" and (ii) be posted "in conspicuous places throughout the block face where the proposed Personal Wireless Service Facility is to be located." (Public Works Code § 1512(b).)

Appellant argues that the notice of Tentative Approval was defective for the following reasons: (a) residents within a 150 feet of the property did not receive notice; (b) the notice was allegedly posted on only one pole; (c) the response period was unduly shortened because the notices were not postmarked; and (d) one resident was told by Public Works that she could not file a protest because she did not receive a notice in the mail. Appellant also complains about the notice and timing of the Public Works hearing on the Protests.

Appellant's arguments regarding the Tentative Approval notice fail because the evidence shows that Mobilitie complied with the requirements of Section 1512. Luis Mendez, an agent for Mobilitie, declared under the penalty of perjury that he mailed the Notice of the Tentative Approval to residents within 150 feet of the pole. (Exhibit D.) His declaration includes an envelope postmarked May 30, 2018 that demonstrates the mailing date.

Similarly, James Singleton, another agent for Mobilitie, declared under the penalty of perjury that he posted the notice on two different poles on May 30, 2018, and he included photographic evidence of each posting. He posted the notice on the existing streetlight pole at 1509 Shrader Street as well as another "located along the block face." (Exhibit E.) These declarations constitute sufficient proof that proper notice was provided.

Relying on the protest of Brigitte Bogert and Hemang Kapsai, Appellant argues that the proper notices were not posted. (Brief at 3, citing Exh. 0 at 1.) This protest states that on June 12, thirteen days after the posting, that the protestors did not see a notice on the pole at 1509 Shrader Street. The protest further asserts that a neighbor across the street from that location were unaware of the application. The protest argues that proper notice required a notice on "every tree and light post and parking sign." (Br. Exh. 0 at 1.)

Despite claims to the contrary, nothing in the Public Works Code requires Mobilitie to post the notice of Tentative Approval on "every tree and light post and parking sign." (*See* Brief, Exh. 0 at 1.) Section 1512(b) requires only two types of notice, and Mobilitie complied with both statutory notice requirements. (*See* Exhs. D & E.) Even if the posted notice were somehow removed, the record shows that Mobilitie mailed the notices to residents on both sides of Shrader Street. (Exhibit D at 2.)

Appellant also claims that residents had their response time unduly shortened because there was no postmark on the notices, but the record evidence does not support this argument. Exhibit D contains an envelope for a notice dated by a postal machine. One can reasonably infer that Mr. Mendez stamped every notice with the same machine. Appellant provided no contrary evidence of envelopes without date stamps, and it is hard to imagine that some of the envelopes would not have a date stamp. Moreover, timely protests were submitted, because protestors apparently used the shorter twenty-day time-period out of an abundance of caution. For example, the Sedars filed a protest within twenty days of the notice date and then supplemented their protest three days before the July 9 hearing. (Exh. H (Sedars' July 6, 2018 letter supplementing argument).) Their

supplemental arguments were included in the record and considered. Three other protests were timely filed. (Exh. J. (Protests from other parties).)

Finally, Appellant claims that a Public Works staffer improperly told a resident that she could not file a protest. (Brief at 3.) There is no declaration in the record supporting this claim, but, if it did occur, Public Works agrees that this was an error. However, this error did not deter other protests or this appeal. Importantly, there is no showing that this led to a specific argument being foregone. In addition, the resident could have attended the protest hearing and made her argument at that time, and can still make this argument before the Board of Appeal. (*See* Bd. of Appeals Rules, Art. V, Sec. 2(c).)

Appellant further alleges that there was inadequate notice of Public Works' hearing on the protest. (Brief at 3-4.) Appellant argues that all the residents should have been given notice of the hearing on the protest, but rules do not require a new mailing to all the residents. The rules require notice to the protesting parties. (Public Works Code § 1513(c).) The record show that this notice was provided. (Exh. K (Public Hearing Notice.) Public Works also ensured that the Haight Ashbury neighborhood groups each received notice of the hearing. (Exh. K.) Finally, Appellant argues that scheduling the hearing on the protests five days after the July 4th holiday was unfair because it deterred neighbors from participating. Nothing in the Public Works Code required the hearing to be held on a particular day. If protestors needed more time, they could have simply asked for a later hearing date based on the intervening holiday.

Despite their claims of inadequate notice, Appellant submitted a petition with sixty signatures opposing the Permit. (Exh. H at 3.) This leaves no room for doubt that local residents knew about the hearing. The notices were adequate for residents to pursue their legal right to protest the Tentative Approval.

The objective record evidence is that Mobilitie mailed and posted the Notices of Tentative Approval and that any perceived deficiency in the notice did not deter a full airing of the issues in the protests, at the Public Works hearing, and now in this appeal. For these reasons, the Board should find that there was adequate notice.

II. Appellant Has Not Shown that Mobilitie Acted Improperly During the Permitting Process, such that the Board Should Grant the Appeal.

Appellant's second argument is the Board should grant their appeal because Mobilitie has proven to be a bad actor of sorts. (Brief at 4-5.) Appellant argues that Mobilitie supported its Application with photo-simulations that were misleading because the photo-simulations did not have an arrow explicitly pointing out the relay box and antenna in the middle of the pole. Public Works agrees that a second arrow would have made the notice more informative. However, the lack of the second arrow does not make the notice defective. Section 1512(a)(1) requires the notice to "[p]rovide a description and a photo-simulation of the proposed Personal Wireless Service Facility."

In any event, reviewed together the written notice and the photo-simulations provide adequate notice. Both photo-simulations include the box in the middle of the pole. (Exh. C at 5, 6.) Similarly, the notice identifies the two separate devices that will be installed on the pole. The description specifically lists "the equipment to be installed: One (1) antenna, one (1) equipment enclosure housing UE relay and radio." (Exh. C at 1.) Both photo-simulations show the equipment enclosure housing UE relay and radio attached on the middle of the pole and an antenna on top of the pole.

Appellant also complains that the scale of the photographs provide a misleading impression of the project. Appellant's brief and protests, however, demonstrate a thorough understanding of the project. By definition, a notice serves to inform residents of a project and their rights to challenge the project. Once informed of a project, residents can obtain the file and analyze the details. The noticed worked as intended: concerned residents had the opportunity to evaluate and contest this project.

III. The Application Complies with Article 25 Because Mobilitie Proposes to Replace an Existing Streetlight Pole.

Appellant mistakenly argues that Mobilitie is improperly installing a new pole in violation of Public Works Code section 1500(c)(1), which prohibits the installation of a new pole in an underground utility district. That is not what Mobilitie intends to do here. Mobilitie's proposal is to replace an existing streetlight pole with a streetlight pole in the same location. Nothing in the Public Works Code prohibits Mobilitie from replacing an existing streetlight pole, even in an underground utility district. Shrader Street still needs its streetlight and Mobilitie's replacement pole maintains the same streetlight. The utility pole status quo remains unchanged. Appellant's reliance on Public Works Condition No. 2 is misplaced because this condition mimics the section 1500(c)(1) prohibition.

IV. The Planning Department Made a Compatibility Determination and Verified that the Project Would not Obstruct Private Views.

Appellant claims that their private views will be obstructed; Appellant supports their argument by conflating the two different Planning Department standards. (Brief at 6-7.) Public Works section 1509(b)(2) requires the Planning Department to analyze compliance with the compatibility standards for Tier B Personal Wireless Service Facility Site Permit. Public Works can only approve a Tier B Personal Wireless Service Facility Site Permit if "Planning Department makes a determination that the Application satisfies the applicable Tier . . . B Compatibility Standard." (Public Works § 1509(c).) Public Works section 1509(b)(2) section also allows the Planning Department to "include a Condition that the Personal Wireless Service Facility not obstruct the view from or the light into any adjacent residential window." However, under Public Works Code section 1509(b)(2) the Board cannot uphold the appeal based on concerns over private views.

Here, the Planning Department made the requisite compatibility determination. (*See* Exh. A.) The Department concluded, among other things, that the Wireless Facility "**WOULD NOT** significantly detract from

the character of the . . . Scenic Vistas." (*Id.* at 1 (original emphasis).) As part of this evaluation, the Planning Department explained that the General Plan designates this street as having "excellent street views." (*Id.* at 2.) Appellant argues that Public Works should consider this rating when analyzing personal views from residences, but this misconstrues the Compatibility Standard. The Compatibility Standard only applies to views from the public right-of-way—not from private residences. (*See* DPW Order No: 184504, Section 7, Part D ("The Planning Department shall not take into views from private properties.")

Appellant's primary concern is that the Wireless Facility will obstruct personal views. (Brief at 6.) Following the Sedars' protest, and as required by DPW Order No: 184504, the Planning Department analyzed and rejected the claim that personal views would be obstructed. (Exh. L (July 2, 2018 Planning Department Email to Sedars).) In this email, the Planning Department informed the Sedars, "[d]ue to the streamlined design of the wireless attachments, the proposed wireless facility would not substantially obstruct views from a window, or block light into a residential window." (*Id.*) Appellant complains that this is "simplistic, blanket approach" (Brief at 7), but Appellant ignores Planning Department's cite to Section 2, Part B, Definition 39. This definition in DPW Order No: 184504 sets objective criteria for assessing whether a Wireless Facility obstructs a personal view in a residence. The Planning Department determined that the Wireless Facility meets this criteria. (Exh. L.)

The Board of Appeal should uphold the Director's findings that the Planning Department "determined that the proposed wireless facility would not substantially obstruct views from a window, or block light into a residential window" and that Planning Department made the requisite compatibility determination for a Tier B Personal Wireless Service Facility Site Permit. (Exh. F.) In any event, even if the Board disagrees with that determination, the Board cannot rely on Appellant's claim of obstructing private views to grant the appeal and deny the Permit, because Public Works Code section 1509(b)(2) does not provide an independent basis for such a denial.

V. Department of Public Health Studied the Correct Equipment and Properly Determined that the Application Complies with the Public Health Compliance Standard.

Appellant argues that the DPH erred in finding compliance with the Public Health Compliance Standard, because DPH studied a different piece of equipment than proposed by Mobilitie. (Brief at 8.) A review of the record shows that DPH analyzed the correct equipment and based its determination on the Hammett and Edison study. (Exh. A.) According to Hammett and Edison, Mobilitie proposes to install two antennas: 1) an Alpha Wireless Model AW3477-S1-G on top of the pole; and 2) the Airspan Model iRelay 460 antenna on the middle of the pole. (Exh M at 2.)

Appellant argues that DPH analyzed RF emissions from the "Fastback Networks Model IBR 1300 Microwave antenna," instead of the Airspan antenna proposed by Mobilitie. To justify this claim, Appellants rely on one reference to the Fastback antenna in the DPH memo. (Brief at 8.) This reference, however, appears to be in error, because this reference incorrectly states that Hammett and Edison analysis listed this piece of equipment. (Cf. Exh A at 1 to Exh. M at 2.) Moreover, the rest of the DPH memo and the underlying Hammett and Edison study consistently refer to and study to the Airspan antenna. (Exhs A, M.) The Wireless Facility plans also show that Mobilitie proposes to use the Airspan antenna. (Exh N at 2.)

This one mistaken reference to the Fastback antenna does not affect DPH's conclusion: "Based on the information provided in the Hammett and Edison report, I would agree that this Mobilitie Alpha Wireless and Airspan Model iRelay 460 antenna, utility pole installation would be in compliance with the FCC standards and would not produce radio frequency energy exceeding the FCC public exposure limits." (Exh. B at 1.) Thus, Appellant's argument that DPH studied the effects of Fastback antenna should be disregarded.

Appellant also claims that the standards for RF emissions on which the city rely are outdated and should be reassessed. (Brief at 10-11.) Appellant asserts that two neighbors, who are medical experts, urge prudence. (*Id.* at 10.) Under federal law, however, the City cannot deny an application for a Personal Wireless Service

Facility Site Permit on grounds related to RF emissions if the applicant shows that the RF emissions from the proposed Personal Wireless Service Facility would comply with the FCC's RF emissions guidelines. (47 U.S.C. § 332(c)(7)(B)(iv).) For that reason, under Article 25, the standard for RF emissions is whether "any potential human exposure to radio frequency emissions from a proposed Personal Wireless Service Facility described in an Application is within the FCC guidelines." (Public Works Code § 1502.) Public Works cannot deny an application for a Personal Wireless Service Facility Site Permit if the applicant establishes that its proposed Personal Wireless Service Facility meets this standard. (*See* Public Works Code §§ 1511(b)(1), 1513(h)(1).) Nor can Public Works or DPH question the scientific validity of the FCC's guidelines when reviewing an application for a Personal Wireless Service Facility Site Permit.[1]

Here, DPH found that the Application met the Article 25 RF standard and recommended approval of the Permit. (Exh. B.) Public Works relied on that recommendation to grant the Permit. (Exh. F.) Based on this, the Board cannot grant the appeal.

VI. Appellant Raises Other Policy Concerns Are Not a Basis for Denying the Permit.

The Board can only grant the appeal and deny the Permit if there is a violation of Article 25. (Public Works Code § 1513.) Among other things, Appellant claims that property values may be lowered, that there is a fire risk, that the city approved the Permit to generate revenue, and that a Sprint wireless tower does not add value to the neighborhood. These arguments provide no valid basis to grant the appeal because none shows a violation of Article 25.

---

[1] In light of public concerns over RF emissions, the FCC has been examining its own guidelines. In March 2013, the FCC opened a proceeding seeking to reassess its rules on human exposure to RF emissions. (See *In the Matter of Reassessment of Federal Communications Commission Radiofrequency Exposure Limits and Policies Proposed Changes in the Commission's Rules Regarding Human Exposure to Radiofrequency Electromagnetic Fields* (March 29, 2013) (available at: https://apps.fcc.gov/edocs_public/attachmatch/FCC-13-39A1_Rcd.pdf). Despite receiving thousands of comments in that proceeding, the FCC has not yet issued a decision.

In addition, these arguments fail because Article 25 applies uniformly to utility poles in the public right-of-way. (Public Works Codes § 1500(a).) Appellant predicates each argument on the assumption that siting this Wireless Facility is unique to this street, but it is not. Wireless Facilities have been and are continuing to be installed throughout the City. Upholding any of these arguments would undermine Article 25.[2]

To deny the Permit on any of these policy arguments would require a legislative change to the ordinance. Until that time, these arguments provide no basis for denying the Permit.

CONCLUSION

For the reasons set forth above, the Board should deny the appeal and uphold the Public Works determination to issue Mobilitie a Personal Wireless Service Facility Site Permit near 1509 Shrader Street.

Very truly yours,

JERRY SANGUINETTI

cc: Brian D. Sedar, Agent for Appellant (briandsedar@gmail.com)
James Singleton, Agent for Mobilitie (JSingleton@mobilitie.com)

[2] Appellant also argues, without citing any state law or local ordinance, that by granting this Permit the City will treat residents' concerns over exposure to RF emissions differently than San Francisco firefighters' concerns over such exposures. This is not the case. Nothing in Article 25 allows Public Works to take into account that a proposed Personal Wireless Service Facility might be in front of a firehouse.

Exhibit A: Planning Department letter

SAN FRANCISCO
PLANNING DEPARTMENT

1650 Mission St.
Suite 400
San Francisco,
CA 94103-2479

Reception:
415.558.6378

Fax:
415.558.6409

Planning
Information:
415.558.6377

Date:	October 11, 2017
DPW Permit No.:	**18WR-0033**
Project Address:	**1509 Shrader Street**
	Galvanized Steel Replacement Pole owned by SFPUC
Project Sponsor:	James Singleton
	Mobilitie, LLC for Sprint
	2955 Red Hill Ave.
	Costa Mesa, CA 92626
Staff Contact:	Mathew Chandler – (415) 575-9048
	Mathew.Chandler@sfgov.org
Determination:	**Approval with Conditions**

Department of Public Works Code Article 25 and Order No. 183,440 require review by the Planning Department to determine that the Application for a Tier A or Tier B Personal Wireless Service Facility Site Permit satisfies the applicable Tier A or Tier B Compatibility Standard. An Application for a Tier B Personal Wireless Service Facility Site Permit shall satisfy the Tier B Compatibility Standard for a Zoning and/or a Planning Protected Location, and shall not obstruct the view from or the light into any adjacent residential window. A proposed Personal Wireless Service Facility shall be consistent with the public health, safety, convenience and general welfare and will not unreasonably affect, intrude upon or diminish any identified City resource.

DETERMINATION

The Planning Department determines that the proposed Personal Wireless Service Facility **WOULD NOT** significantly detract from the character of the adjacent residential/commercial/mixed-use Districts, Scenic Vistas; or potential and or known historic Buildings; Districts. The Planning Department recommends **APPROVAL WITH CONDITIONS** in conformance with architectural plans dated April 27, 2018 and photo simulations dated February 6, 2018, and associated with DPW Wireless Application No. 18WR-0033.

Findings:

The proposed Tier B Personal Wireless Service Facility is to be located in the public right-of-way in a Planning and Zoning Protected Location, adjacent to 1509 Shrader Street, and on a street with **Excellent Street Views.**

The proposed Personal Wireless Service Facility is, on balance, consistent with Article 25 of the Public Works Code and the Objectives and Policies of the General Plan, as follows:

Article 25 Compliance:

I. The proposed Personal Wireless Service Facility would not significantly impair the views of any of the important buildings, landmarks, open spaces, or parks that were the basis for

the designation of the street as a view street. This site has been designated as having excellent street views per the San Francisco General Plan.

II. The proposed Personal Wireless Service Facility would not significantly detract from any of the defining characteristics of the Residential or Neighborhood Commercial zoning district. This site is located within the RH-2 (Residential-House, Two Family) Zoning District.

The proposed Sprint personal wireless service facility would be situated within the RH-2 (Residential-House, Two Family) district. The RH-2 District is devoted to one-family and two-family houses, with the latter commonly consisting of two large flats, one occupied by the owner and the other available for rental. Structures are finely scaled and usually do not exceed 25 feet in width or 40 feet in height. Building styles are often more varied than in single-family areas, but certain streets and tracts are quite uniform. Considerable ground-level open space is available, and it frequently is private for each unit. The Districts may have easy access to shopping facilities and transit lines. In some cases, Group Housing and institutions are found in these areas, although nonresidential uses tend to be quite limited.

Planning has determined that the proposed Sprint personal wireless service facility is designed in a streamlined manner, as proposed it will be located on a replacement pole in the exact location of an existing light pole which would not significantly detract from any of the defining characteristics of the excellent street view or RH-2 (Residential-House, Two Family) district.

General Plan Compliance:

I. URBAN DESIGN ELEMENT

The Urban Design Element concerns the physical character and order of the city, and the relationship between people and their environment. The Urban Design Element is concerned both with development and with preservation. It is a concerted effort to recognize the positive attributes of the city, to enhance and conserve those attributes and to improve the living environment where it is less than satisfactory. The Plan is a definition of quality, a definition based upon human needs.

OBJECTIVE 1

Emphasis of the characteristic pattern which gives to the City and its neighborhoods an image, a sense of purpose, and a means of orientation.

Policy 1.1

Recognize and protect major views in the city, with particular attention to those of open space and water.

OBJECTIVE 2

Conservation of resources which provide a sense of nature, continuity with the past, and freedom from overcrowding.

Policy 2.9
Review proposals for the giving up of street areas in terms of all the public values that streets afford.

OBJECTIVE 4
Improvement of the neighborhood environment to increase personal safety, comfort, pride and opportunity.

Policy 4.14
Remove and obscure distracting and cluttering elements.

The project has been designed to reduce, to the best extent possible, the blocking or other impairment of pleasing street views, and preserves an important characteristic of the unique setting and quality of the city.

The project has been designed to maintain, to the best extent possible, views from streets which can provide a means for orientation, and preserves the ability for an observer to perceive the City and its districts clearly.

II. TRANSPORTATION ELEMENT
The Transportation Element concerns pedestrian movement in the city as to ensure the city is safe, convenient, and pleasant as pedestrian travel is an important component of the transportation system. The close-knit fabric of San Francisco, in junction with the dramatic hills and sweeping vistas, makes walking an ideal mode for exploring and moving about the city. The sidewalk is a shared space and provides a strong sense of the overall image of the city.

OBJECTIVE 23
Improve the city's pedestrian circulation system to provide for efficient, pleasant, and safe movement.

Policy 23.5
Establish and enforce a set of sidewalk zones that provides guidance for the location of all pedestrian and streetscape elements, maintains sufficient unobstructed width for passage of people, strollers and wheelchairs, consolidates raised elements in distinct areas to activate the pedestrian environment, and allows sufficient access to buildings, vehicles, and streetscape amenities.

The project has been designed to maintain at least four (4) feet unobstructed width for pedestrian passage as outlined in the Pedestrian Network Streets and Design Guidelines of the Transportation Element.

OBJECTIVE 24
Improve the ambience of the pedestrian environment.

Policy 24.4
Preserve pedestrian-oriented building frontages.

The project has been designed as a minimally-visible facility to be attached to an existing light/utility pole extant in the public sidewalk. The facility components are designed as an extension to the pole and equipment boxes, with requirements to be painted or shrouded to match the pole further reducing their visibility and any conflicts with the building frontages within the RH-2 (Residential-House, Two Family) district.

Conditions:

1. Plant and maintain an appropriate street tree.
2. No exposed meter, meter pan or meter pedestal may be used.
3. Antenna, and all equipment (external conduit, radio relay units, blinders used to shroud bracket bolts [if needed], and mounting mechanisms); except signage, if used for screening, shall all be painted to match the pole and repainted as needed.
4. Cabling below radio relay units shall enter the pole with no more than a five-inch gap between bottom of each radio relay unit and the bottom of the corresponding entry hole on the pole. Conduit connection at pole entry points shall utilize the smallest fitting sizes available. Sealing compounds, if utilized, shall be tidy without excess bubbling and painted to match pole.
5. Remove raised equipment signage (including filling in manufacturer logo indentations on radio relay units/cabinets) and equipment decals that may be visible from sidewalk and dwellings, unless required by government regulation.
6. Utilize smallest RF warning signage allowed (4 x 6 inches); and place the warning sticker facing out toward street, at a location as close to antenna as is feasible. Sticker shall face away from street, when not facing a nearby window within 15 feet. Background color of sticker shall match the pole-mounting surface; and logo and text shall be white.
7. Stack equipment enclosures (not including antenna) as close as allowed by applicable regulation and manufacturer equipment standards.
8. Seams and bolts/screws at antenna and shroud assembly area shall be fabricated and installed in a manner so as to reduce their visibility (e.g. flush mounting screws) from sidewalk level.
9. Not utilize any visible flashing indicator lights or similar.
10. Not obstruct the view from, or the light into any adjacent residential window.
11. New below ground enclosure excavations (vault), if utilized, shall not damage or remove granite curbs. No significant gaps shall be created between vault enclosure lid and primary sidewalk material due to installation. Any other existing historic architectural elements within the public right-of-way shall be retained and protected during installation. No carrier logo or carrier name may be placed on the vault lid.
12. Non-essential radio relay unit elements (handle and legs) shall be removed.
13. The installer shall arrange to have Planning Department staff review the initial installation, in order to ensure compliance with the aforementioned conditions (notwithstanding inspections by pole owner and Department of Public Works).

14. Ensure Wi-Fi Access Points and associated wiring, utilized by the City's Department of Technology, are not damaged during installation (if present).
15. Should the installation vary from said conditions, the application shall be resubmitted to the Planning Department for further review and comment.

Sincerely,

Mathew Chandler
Assistant Planner

Cc: Amanda Higgins, Department of Public Works – Bureau of Street Use and Mapping

Exhibit B: Department of Public Health letter

City and County of San Francisco
DEPARTMENT OF PUBLIC HEALTH
ENVIRONMENTAL HEALTH SECTION Stephanie Cushing, MSPH, CHMM, REHS, Director of EH

Mark Farrell, Mayor
Barbara A. Garcia, MPA, Director of Health

April 24, 2018

TO: Gene Chan, Dept. of Public Works, Bureau of Street Use and Mapping

FROM: Arthur Duque, Dept. Of Public Health, Environmental Health Services AD

RE: Mobilitie Pole Mounted Antennas, Alpha Wireless Model AW3477-S1-G & Airspan Model iRelay 460

Location:	DPW Application:	Node#
1509 Shrader St.	18WR-0033	9CAB007733 / SF90xs701B

As requested, I have reviewed the documentation that you and Mobilitie have provided to me regarding the proposed installation of an Alpha Wireless Model AW3477-S1-G & Airspan Model iRelay 460 Antenna, on a utility pole or similar structures located at the above listed location in the City and County of San Francisco.

This review includes February 16, 2018 radio frequency energy report prepared by Hammett and Edison Inc. for this site. The report states that one Alpha Wireless Model AW3477-S1-G omnidirectional cylindrical antenna & Fastback Networks Model IBR 1300 Microwave antenna will be mounted on a utility pole near the location listed above. The Alpha Wireless antenna will be at least 31 feet above the ground level. The Fastback Networks Microwave antenna will be 19 feet above the ground pointing in the 37°T which is northeast on Shrader St. Due to the mounting location, the antenna would not be accessible to the general public.

The maximum effective radiated power from this antenna is estimated to be 154 watts.

The maximum calculated exposure level at the ground level will not exceed 0.012 mW/cm2, which is 1.2% of the FCC public exposure standard. The three dimensional perimeter of the radio frequency (RF) levels equal to the public exposure limit is calculated to extend a maximum of 2.50 feet from the face of the antenna and does not reach any publicly accessible areas. The maximum calculated exposure level at any nearby building is 6.9% of the FCC public exposure limit for the adjacent building 15 feet away.

Based on the information provided in the Hammett and Edison report, I would agree that this Mobilitie Alpha Wireless and Airspan Model iRelay 460 antenna, utility pole installation would be in compliance with the FCC standards and would not produce radio frequency energy exceeding the FCC public exposure limits.

In addition, a noise evaluation was done on the combination of equipment assumed to be installed at this location which was prepared by Hammett & Edison and was dated November 3, 2017. This evaluation found that the equipment will produce noise no louder than 45 decibels 8 feet away from the nearest building façade. As such, the installation of the equipment would be in compliance with the noise standards as outlined in the DPW Code, Article 25.

Approval Conditions:

- Ensure that any equipment associated with the pole installation of this antenna does not produce a noise in excess of 45 dBA as measured at three (3) feet from the nearest residential building façade.

- Ensure that there are no publicly occupied areas within two and a half (2.50) feet from the face of the antenna.

- Once the antenna is installed, Mobilitie must take RF power density measurements with the antenna operating at full power to verify the level reported in the Hammett and Edison report and to ensure that the FCC public exposure level is not exceeded in any publicly accessible area. This measurement must be taken again at the time of the permit renewal.

- Mobilitie should be aware that the general public may have concerns about the antenna and potential RF source near their dwellings. Mobilitie should have in place a procedure for taking RF power density levels in nearby dwellings when requested by the members of the general public.

- In accordance with the San Francisco Public Works Code, Art. 25, Sec. 1527 (a)(2)(C) AT&T is responsible for paying a fee of $210.00 to the San Francisco Department of Public Health for this review.

Please note that this approval and any conditions apply only to the equipment and installation as described. If any changes in the equipment or any increase in the effective radiated power described above are made, a new review by the Department of Public Health must be conducted.

Exhibit C: Public Works issuance of Tentative Approval

NOTICE OF TENTATIVE APPROVAL OF APPLICATION FOR A PERSONAL WIRELESS SERVICE FACILITY SITE PERMIT

Mark Farrell
Mayor

Mohammed Nuru
Director

Jerry Sanguinetti
Manager

Street Use and Mapping
1155 Market St., 3rd floor
San Francisco, CA 94103
tel 415-554-5810

sfpublicworks.org
facebook.com/sfpublicworks
twitter.com/sfpublicworks

5/25/2018

Public Works has tentatively approved the Application No. 18WR-0033 submitted by Mobilitie, LLC for a Personal Wireless Service Facility Site Permit in the vicinity of 1509 Shrader Street. The approval contains certain conditions that are attached to this letter. These conditions may be modified prior to the issuance of a Personal Wireless Service Facility Site Permit at this location.

The equipment to be installed at this location include: One (1) antenna, one (1) equipment enclosure housing UE Relay and radio.

If approved, Mobilitie, LLC may install the permitted Personal Wireless Service Facility at this location. A photo-simulation of the proposed Personal Wireless Service Facility is attached hereto.

Pursuant to San Francisco Public Works Code § 1513, you have 20 days from the later of the date on this notice or the postmark to protest the Application.

To submit a protest of/or comments on the Application please visit the Public Works website at the following address: bsm.sfdpw.org and click "Comment on Permit" and enter "18WR-0033 " or send to the following address:

San Francisco Public Works
Bureau of Street-use and Mapping
1155 Market Street
San Francisco, CA 94103
Attn: Wireless Permit Protests

If a timely protest is submitted, Public Works will hold a public hearing to determine whether to grant the Application. Public Works will notify you at a later date of the date and time for the hearing.

The protest must be based on one or more of the following grounds:

1. The Department of Public Health incorrectly determined that the Application complies with the Public Health Compliance Standard (see Public Works Code § 1507).

2. The Planning Department incorrectly determined that the Application meets the applicable Compatibility Standard (see Public Works Code § 1509).

3. The Application does not comply with any other requirement for obtaining a Personal Wireless Service Facility Site Permit.

4. The Applicant intends to modify the Personal Wireless Service Facility after the Permit is issued in a manner that would not comply with the applicable Compatibility Standard.

If the proposed location for the Personal Wireless Service Facility is in a residential or neighborhood commercial zoning district your protest may include a claim that the proposed Personal Wireless Service Facility obstructs the views from or blocks the light into any adjacent residential windows. (See Public Works Code § 1509(b)(2).) If your protest contains such a claim, please include with your protest photographs depicting the potential obstruction of the views from or the blocking of the light into your windows so that the Planning Department and/or hearing officer can evaluate this aspect of your protest. The Planning Department may contact you to ask permission to enter into your residence to investigate your claim. If the Planning

Department or hearing officer agrees with your concerns, the City may add certain conditions to its approval of the Application to ameliorate those concerns.

The Applicant does not know at this time whether it will file an Application for a permit to modify the proposed Personal Wireless Service Facility at any time during the term of the Personal Wireless Service Facility Site Permit.

In order to receive correspondence from Public Works, the Applicant, and other interested parties please include with your protest all of the following information: Street address, daytime telephone number, and email address (if available).

To obtain additional information concerning the Application, the tentative approval, or the protest you may contact James Singleton of Mobilitie at 650-814-0564 or JSingleton@mobilitie.com. You may also contact SF Public Works at (415) 554-5343.

For more information on Personal Wireless Service Facilities generally you can also visit www.sf-planning.org/wireless.

Public Works Wireless Program

PERMIT CONDITIONS

Approval of the proposed Personal Wireless Service Facility Site Permit has been recommended by San Francisco Public Works (Bureau of Street-Use and Mapping), San Francisco Department of Public Health, San Francisco Planning Department.

The tentative approval includes the following condition(s) that have been accepted by Applicant:

San Francisco Public Works Conditions:

1. This recommendation is based on no variation from the depicted drawings and/or photo simulation; if a variation is different a re-submittal is required. Should the installation vary from said conditions, it should be resubmitted to Department(s) for further review and comment
2. New Poles: no new poles shall be erected or placed in underground districts.
3. Down Guys: Follow all excavation codes to obtain the necessary permits for placement of down guys. Down guy shall avoid crossing conflicting areas but not limited to driveways, curb ramps.
4. Comply with ADA code requirements for Federal, State, local laws. Make sure path of minimum required clear width for accessible path of travel is four feet.
5. At the conclusion of the work, provide a set of as built photos of the installation to the Bureau Street Use & Mapping Permit Office.
6. Maintain a valid certification of insurance annually and forward a copy to the Bureau Street Use & Mapping Permit Office.

San Francisco Department of Public Health Conditions:

1. Ensure that any equipment associated with the pole installation of this antenna does not produce a noise in excess of 45 dBA as measured at three (3) feet from the nearest residential building façade.
2. Ensure that there are no publicly occupied areas within two and a half (2.50) feet from the face of the antenna.
3. Once the antenna is installed, Mobilitie must take RF power density measurements with the antenna operating at full power to verify the level reported in the Hammett and Edison report and to ensure that the FCC public exposure level is not exceeded in any publicly accessible area. This measurement must be taken again at the time of the permit renewal.
4. Mobilitie should be aware that the general public may have concerns about the antenna and potential RF source near their dwellings. Mobilitie should have in place a procedure for taking RF power density levels in nearby dwellings when requested by the members of the general public.
5. In accordance with the San Francisco Public Works Code, Art. 25, Sec. 1527 (a)(2)(C) AT&T is responsible for paying a fee of $210.00 to the San Francisco Department of Public Health for this review.

Please note that this approval and any conditions apply only to the equipment and installation as described. If any changes in the equipment or any increase in the effective radiated power described above are made, a new review by the Department of Public Health must be conducted.

San Francisco Planning Department Conditions:

1. Plant and maintain an appropriate street tree.
2. No exposed meter, meter pan or meter pedestal may be used.
3. Antenna, and all equipment (external conduit, radio relay units, blinders used to shroud bracket bolts [if needed], and mounting mechanisms); except signage, if used for screening, shall all be painted to match the pole and repainted as needed.
4. Cabling below radio relay units shall enter the pole with no more than a five-inch gap between bottom of each radio relay unit and the bottom of the corresponding entry hole on the pole. Conduit connection at pole entry points shall utilize the smallest fitting sizes available. Sealing compounds, if utilized, shall be tidy without excess bubbling and painted to match pole.
5. Remove raised equipment signage (including filling in manufacturer logo indentations on radio relay units/cabinets) and equipment decals that may be visible from sidewalk and dwellings, unless required by government regulation.
6. Utilize smallest RF warning signage allowed (4 x 6 inches); and place the warning sticker facing out toward street, at a location as close to antenna as is feasible. Sticker shall face away from street, when not facing

a nearby window within 15 feet. Background color of sticker shall match the pole-mounting surface; and logo and text shall be white.

7. Stack equipment enclosures (not including antenna) as close as allowed by applicable regulation and manufacturer equipment standards.
8. Seams and bolts/screws at antenna and shroud assembly area shall be fabricated and installed in a manner so as to reduce their visibility (e.g. flush mounting screws) from sidewalk level.
9. Not utilize any visible flashing indicator lights or similar.
10. Not obstruct the view from, or the light into any adjacent residential window.
11. New below ground enclosure excavations (vault), if utilized, shall not damage or remove granite curbs. No significant gaps shall be created between vault enclosure lid and primary sidewalk material due to installation. Any other existing historic architectural elements within the public right-of-way shall be retained and protected during installation. No carrier logo or carrier name may be placed on the vault lid.
12. Non-essential radio relay unit elements (handle and legs) shall be removed.
13. The installer shall arrange to have Planning Department staff review the initial installation, in order to ensure compliance with the aforementioned conditions (notwithstanding inspections by pole owner and Department of Public Works).
14. Ensure Wi-Fi Access Points and associated wiring, utilized by the City's Department of Technology, are not damaged during installation (if present).
15. Should the installation vary from said conditions, the application shall be resubmitted to the Planning Department for further review and comment.

Exhibit D: Notice of Tentative Approval of Application for a Personal Wireless Service Facility Site Permit

RADIUS services

1221 HARRISON STREET #18
SAN FRANCISCO, CA 94103

P: 415-391-4775
F: 415-391-4777
radiusservices@sfradius.com

AFFIDAVIT OF PREPARATION OF RADIUS NOTIFICATION MAP, MAILING LIST, & DELIVERY MATERIALS FOR PUBLIC NOTIFICATION

RADIUS SERVICES hereby declares as follows:

1. We have prepared the NOTIFICATION MAP, MAILING LIST, and DELIVERY MATERIALS for the purpose of public notification in accordance with the requirements and instructions stipulated by San Francisco City Planning Department Planning Code / San Francisco Department of Building Inspection / San Francisco Public Works Code:

- [ ] Section 311 (Residential)
- [ ] Section 312 (Commercial)
- [ ] Variance
- [ ] Environmental Evaluation
- [ ] Conditional Use Permit
- [ ] Conditional Use Permit for Wireless Antenna Installation
- [x] Other 300' Owners/150'Occupants for Light Pole
- [ ] Mobile Food Facility (MFF)
  Truck: 75' minimum radius measured from the outer boundaries of the assumed curbside and all properties across the street that directly fronts, in whole or in part.
- [ ] Mobile Food Facility (MFF)
  Push Cart: 300' minimum radius of the street address(s) in front of which the Pushcart will be located.
- [ ] Minor Sidewalk Encroachment (MSE)
  150' radius fronting the subject property.
- [ ] Major Sidewalk Encroachment (ME)
  300' complete radius.
- [ ] Section 106.3.2.3 (Demolition)

2. We understand that we are responsible for the accuracy of this information, and that erroneous information may require remailing or lead to suspension or revocation of the permit.

3. We have prepared these materials in good faith and to the best of our ability.

We declare under penalty of perjury under the laws of the State of California and the City and County of San Francisco that the foregoing is true and correct.

EXECUTED IN SAN FRANCISCO, ON THIS DAY, 2/19/2018.

RADIUS SERVICES
Professional Service Provider

Kevin Chuck
Radius Services

1289002N
Radius Services Job Number

1509 Shrader St
Project Address

1289/3
Block / Lot

59

RADIUS SERVICES 1221 HARRISON ST #18 SAN FRANCISCO CA 94103 415-391-4775

BLOCK	LOT	OWNER	OADDR	CITY	STATE	ZIP
0001	001	RADIUS SERVICES NO 1289002N	1507 SHRADER ST	MOBILITIE	18	0219
0001	002					
0001	003	RADIUS SERVICES	1221 HARRISON ST #18	SAN FRANCISCO	CA	94103
0001	004	MOBILITIE	2955 RED HILL AVE, #200	COSTA MESA	CA	92626
0001	005					
1287	016A	MONICA PRESSLEY	1450 SHRADER ST	SAN FRANCISCO	CA	94117-4234
1288	009	LOIS LOW	149 MOLIMO DR	SAN FRANCISCO	CA	94127-1821
1288	009	OCCUPANT	1461 SHRADER ST #1	SAN FRANCISCO	CA	94117-4258
1288	009	OCCUPANT	1461 SHRADER ST #2	SAN FRANCISCO	CA	94117-4258
1288	009	OCCUPANT	1461 SHRADER ST #3	SAN FRANCISCO	CA	94117-4258
1288	009	OCCUPANT	1461 SHRADER ST #4	SAN FRANCISCO	CA	94117-4258
1288	009	OCCUPANT	1461 SHRADER ST #5	SAN FRANCISCO	CA	94117-4258
1288	009	OCCUPANT	1461A SHRADER ST	SAN FRANCISCO	CA	94117-4258
1289	002	WILLIAM SHEPPARD	1505 SHRADER ST	SAN FRANCISCO	CA	94117-4235
1289	002	OCCUPANT	1507 SHRADER ST	SAN FRANCISCO	CA	94117-4235
1289	003	BRIAN SEDAR	1509 SHRADER ST	SAN FRANCISCO	CA	94117-4235
1289	004	WILLIAMSON SHEN	1515 SHRADER ST	SAN FRANCISCO	CA	94117-4235
1289	005	SWANSON	1517 SHRADER ST	SAN FRANCISCO	CA	94117-4235
1289	006	LONG-MINICK	1521 SHRADER ST	SAN FRANCISCO	CA	94117-4235
1289	007	ANDREW COLEMAN	1525 SHRADER ST	SAN FRANCISCO	CA	94117-4235
1289	008	FERRIGNO	388 2ND AV	SAN FRANCISCO	CA	94118-2414
1289	008	OCCUPANT	1529 SHRADER ST	SAN FRANCISCO	CA	94117-4235
1289	009	B & J LAWSON	PO BOX 1026	CLEARLAKE OAKS	CA	95423-1026
1289	009	OCCUPANT	1531 SHRADER ST	SAN FRANCISCO	CA	94117-4235
1289	009	OCCUPANT	1533 SHRADER ST	SAN FRANCISCO	CA	94117-4235
1289	062	KARL LEICHUM	3917 19TH ST	SAN FRANCISCO	CA	94114-2521
1289	062	OCCUPANT	4931 17TH ST	SAN FRANCISCO	CA	94117-4259
1289	062	OCCUPANT	4931A 17TH ST	SAN FRANCISCO	CA	94117-4259
1289	062	OCCUPANT	4933 17TH ST	SAN FRANCISCO	CA	94117-4259
1289	062	OCCUPANT	4935 17TH ST	SAN FRANCISCO	CA	94117-4259
1289	062	OCCUPANT	4937 17TH ST	SAN FRANCISCO	CA	94117-4259
1289	074	DAVID NICHOLS	1596 CHURCH ST	SAN FRANCISCO	CA	94131-2048
1289	074	OCCUPANT	1537 SHRADER ST	SAN FRANCISCO	CA	94117-4235
1289	075	MATTHEW RASMUSSEN	1539 SHRADER ST	SAN FRANCISCO	CA	94117-4235
1289	078	BRIGITTE BOGERT	4901 17TH ST	SAN FRANCISCO	CA	94117-4206
1289	079	SEAN FOLEY	4903 17TH ST	SAN FRANCISCO	CA	94117-4206
1289	080	AMY ELIOT	4925 17TH ST	SAN FRANCISCO	CA	94117-4206
1289	081	JULIA ROWE	3555 CLAY ST	SAN FRANCISCO	CA	94118-1838
1289	081	OCCUPANT	4927 17TH ST	SAN FRANCISCO	CA	94117-4206
1289	082	LUCIEL LEIS	4909 17TH ST	SAN FRANCISCO	CA	94117-4206
1289	083	REGAN TESKEY	4911 17TH ST	SAN FRANCISCO	CA	94117-4206
1290	016	J & A MERICKEL	1536 SHRADER ST	SAN FRANCISCO	CA	94117
1290	017	JEAN GALLO	1534 SHRADER ST	SAN FRANCISCO	CA	94117-4236
1290	017	OCCUPANT	1534A SHRADER ST	SAN FRANCISCO	CA	94117-4236
1290	017	OCCUPANT	1534B SHRADER ST	SAN FRANCISCO	CA	94117-4236
1290	018	SANISH MONDKAR	1526 SHRADER ST	SAN FRANCISCO	CA	94117-4236
1290	019	SARAH RIPPY	1520 SHRADER ST	SAN FRANCISCO	CA	94117
1290	020	E & J MCDONALD	1516 SHRADER ST	SAN FRANCISCO	CA	94117-4236
1290	021	BRETT REYNOLDS	268 BUSH ST #2707	SAN FRANCISCO	CA	94104-3503
1290	021	OCCUPANT	1510 SHRADER ST	SAN FRANCISCO	CA	94117-4236
1290	021	OCCUPANT	1512 SHRADER ST	SAN FRANCISCO	CA	94117-4236
1290	022	M & Z FLADELAND	1504 SHRADER ST	SAN FRANCISCO	CA	94117-4236
1290	022	OCCUPANT	1504A SHRADER ST	SAN FRANCISCO	CA	94117-4236
1290	022	OCCUPANT	1506 SHRADER ST	SAN FRANCISCO	CA	94117-4236
1290	023	ERIN STEPHENS	2511 SNAPDRAGON ST	BOZEMAN	MT	59718-7509
1290	023	OCCUPANT	4875 17TH ST	SAN FRANCISCO	CA	94117-4330
1290	023	OCCUPANT	4877 17TH ST	SAN FRANCISCO	CA	94117-4330
1290	024	JAMES MATHEWS	4855 17TH ST	SAN FRANCISCO	CA	94117-4330
1290	024	OCCUPANT	4857 17TH ST	SAN FRANCISCO	CA	94117-4330
1290	030	K & L FARRELL	160 CARMEL ST #101	SAN FRANCISCO	CA	94117-4356
1290	031	LIN	2716 MCKEON WAY	SANTA ROSA	CA	95404-1669
1290	031	OCCUPANT	160 CARMEL ST #102	SAN FRANCISCO	CA	94117-4356
1290	032	KENNETH COHEN	160 CARMEL ST #202	SAN FRANCISCO	CA	94117-4356
1290	033	WILLIAM MEYER	160 CARMEL ST #201	SAN FRANCISCO	CA	94117-4356
9999	999					

SOUTH OF MARKET

Angelica Cabande
South of Market Community Action Network (SOMCAN)
1110 Howard Street
San Francisco, CA 94103

Antonio Diaz
People Organizing to Demand Environmental and Economic Rights (PODER)
474 Valencia Street #125
San Francisco, CA 94103

Carolyn Diamond
Market Street Association
870 Market Street, Suite 456
San Francisco, CA 94102

Corinne Woods
Mission Creek Harbor Association
300 Channel Street, Box 10
San Francisco, CA 94158

Eric Lopez
SoMaBend Nieghborhood
P.O.Box 410805
San Francisco, CA 94141

Ethan Hough
One Ecker Owners Association
16 Jessie Street Unit 301
San Francisco, CA 94105

Gerald Wolf
Hallam Street Homeowners Association
1 Brush Place
San Francisco, CA 94103

Ian Lewis
HERE Local 2
209 Golden Gate Avenue
San Francisco, CA 94102

Jane Kim
Board of Supervisors
1 Dr. Carlton B Goodlett Place, Room #244
San Francisco, CA 94102-4689

Janet Carpinelli
Dogpatch Neighborhood Association
934 Minnesota Street
San Francisco, CA 94107

Jason Henderson
Market/Octavia Community Advisory Comm.
300 Buchanan Street, Apt. 503
San Francisco, CA 94102

Jaime Whitaker
SOMA Leadership Council
201 Harrison Street Apt. 229
San Francisco, CA 94105

Katy Liddell
South Beach/Rincon/ Mission Bay Neighborhood Association
403 Main Street #813
San Francisco, CA 94105

Kaye Griffin
LMNOP Neighbors
1047 Minna Street
San Francisco, CA 94103

Keith Goldstein
Potrero-Dogpatch Merchants Association
800 Kansas Street
San Francisco, CA 94107

Laura Magnani
American Friends Service Committee
65 Ninth Street
San Francisco, CA 94103

Marvis Phillips
Alliance for a Better District 6
230 Eddy Street #1206
San Francisco, CA 94102-6526

Patsy Tito
Samoan Development Centre
2055 Sunnydale Avenue #100
San Francisco, CA 94134-2611

Reed Bement
Rincon Hill Residents Assocation
75 Folsom Street #1800
San Francisco, CA 94105

Rodney Minott
Potrero Hill Neighbors/Save the Hill
1206 Mariposa Street
San Francisco, CA 94107

Sonja Kos
TODCO Impact Group
230 Fourth Street
San Francisco, CA 94103

Ted Olsson
Market/Octavia Community Advisory Comm.
30 Sharon Street
San Francsico, CA 94114-1709

Nadia Sesay
Office of Community Investment and Infrastructure, City and County of San Francisco
1 South Van Ness Avenue, 5th Floor
San Francisco, CA 94103

J.R. Eppler
Potrero Boosters Neigborhood Association
1459 - 18th Street, Suite 133
San Francisco, CA 94107

York Loo
York Realty
243A Shipley Street
San Francisco, CA 94107-1010

Dyan Ruiz
People Power Media
366 10th Avenue
San Francisco, CA 94118

Michelle De Guzman
Office of Community Investment and Infrastructure, City and County of San Francisco
1 South Van Ness Avenue, 5th Floor
San Francisco, CA 94103

SOUTH OF MARKET

Gail Baugh
Hayes Valley Neighborhood Association
700 Hayes Street
San Francisco, CA 94102

Brian Basinger
Q Foundation – AIDS Housing Alliance/.SF
350 Golden Gate Ave. Suite A
San Francisco, CA 94102

David Lal
SF Citywide
870 Market St #815
San Francisco, CA 94102

Ramon Quintero
Tenderloin Neighborhood Development Corporation
149 Taylor Street
San Francisco, CA 94102

Marc Salomon
NEMNA – Northeast Mission Neighborhood Association
P.O. Box 410244
San Francisco, CA 94141

Sue Hestor
San Franciscans for Reasonable Growth (SFRG)
870 Market Street #1128
San Francisco, CA 94102

Antonio Flores
Hotel Zeppelin
545 Post Street
San Francisco, CA 94102

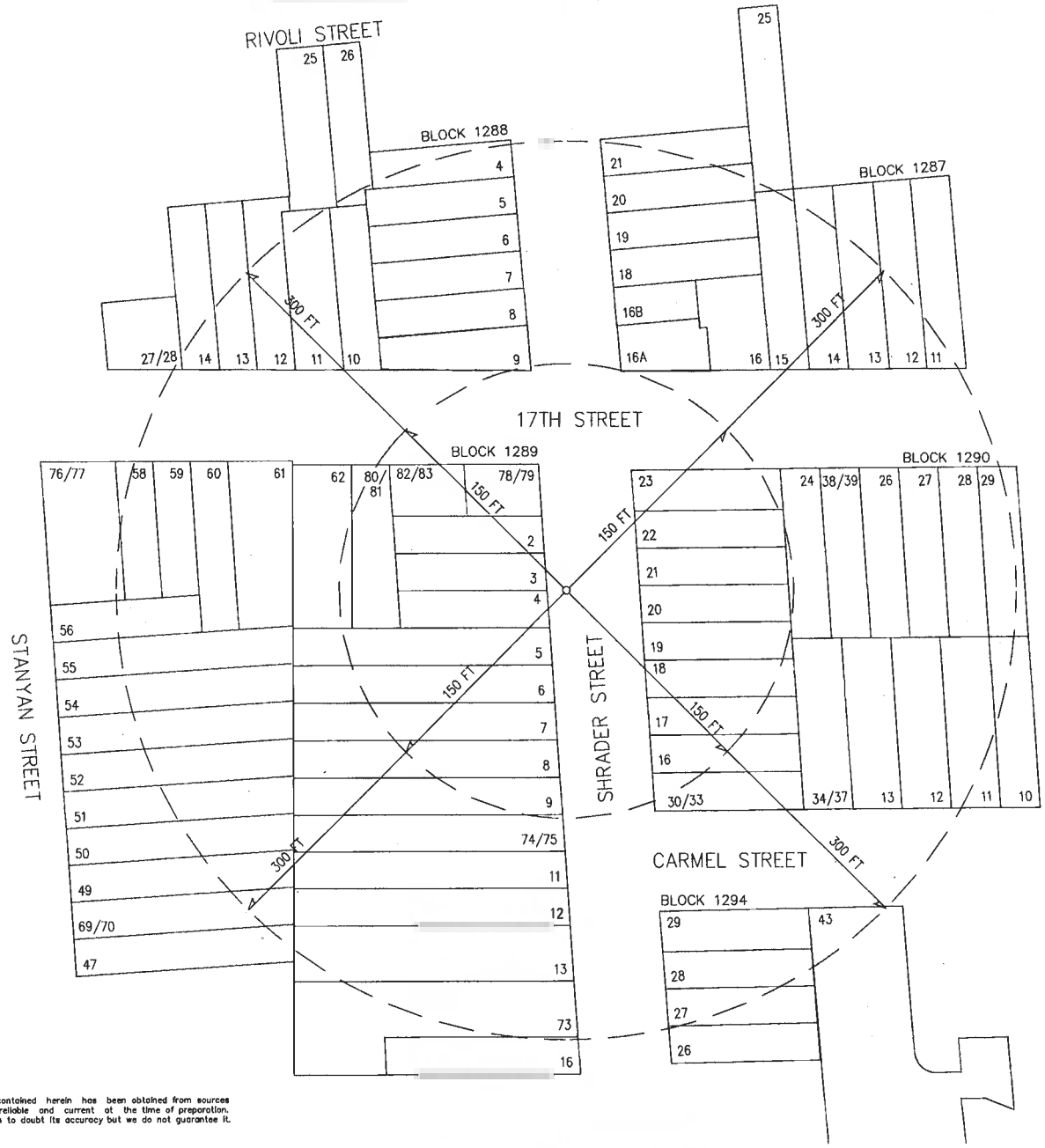

The information contained herein has been obtained from sources that we deemed reliable and current at the time of preparation. We have no reason to doubt its accuracy but we do not guarantee it.

RADIUS
1221 Harrison Street Suite 16
San Francisco CA 94103-4449
(415) 391-4775

BLOCK 1289
LOT 3

San Francisco, CA

N

SCALE: 1"=50'-0"

JOB NO:	DATE: 180219
1289002N	DRAWN: DC
	CHECKED: DC

PERMIT NOTIFICATION MAP

mobilitie
intelligent infrastructure

Mobilitie, LLC
2955 Redhill Avenue
Suite 200
Costa Mesa, CA 92626 USA

[illegible] Tentative Approval of Personal
[illegible] ity Site Permit

[illegible] aterial - Please Open Immediately

San Francisco Planning Department
1650 Mission St #400
San Francisco, CA 94103

NOTICE OF TENTATIVE APPROVAL OF APPLICATION FOR A PERSONAL WIRELESS SERVICE FACILITY SITE PERMIT

Mark Farrell
Mayor

Mohammed Nuru
Director

Jerry Sanguinetti
Manager

Street Use and Mapping
1155 Market St., 3rd floor
San Francisco, CA 94103
tel 415-554-5810

sfpublicworks.org
facebook.com/sfpublicworks
twitter.com/sfpublicworks

5/25/2018

Public Works has tentatively approved the Application No. 18WR-0033 submitted by Mobilitie, LLC for a Personal Wireless Service Facility Site Permit in the vicinity of 1509 Shrader Street. The approval contains certain conditions that are attached to this letter. These conditions may be modified prior to the issuance of a Personal Wireless Service Facility Site Permit at this location.

The equipment to be installed at this location include: One (1) antenna, one (1) equipment enclosure housing UE Relay and radio.

If approved, Mobilitie, LLC may install the permitted Personal Wireless Service Facility at this location. A photo-simulation of the proposed Personal Wireless Service Facility is attached hereto.

Pursuant to San Francisco Public Works Code § 1513, you have 20 days from the later of the date on this notice or the postmark to protest the Application.

To submit a protest of/or comments on the Application please visit the Public Works website at the following address: bsm.sfdpw.org and click "Comment on Permit" and enter "18WR-0033 " or send to the following address:

San Francisco Public Works
Bureau of Street-use and Mapping
1155 Market Street
San Francisco, CA 94103
Attn: Wireless Permit Protests

If a timely protest is submitted, Public Works will hold a public hearing to determine whether to grant the Application. Public Works will notify you at a later date of the date and time for the hearing.

The protest must be based on one or more of the following grounds:

1. The Department of Public Health incorrectly determined that the Application complies with the Public Health Compliance Standard (see Public Works Code § 1507).

2. The Planning Department incorrectly determined that the Application meets the applicable Compatibility Standard (see Public Works Code § 1509).

3. The Application does not comply with any other requirement for obtaining a Personal Wireless Service Facility Site Permit.

4. The Applicant intends to modify the Personal Wireless Service Facility after the Permit is issued in a manner that would not comply with the applicable Compatibility Standard.

If the proposed location for the Personal Wireless Service Facility is in a residential or neighborhood commercial zoning district your protest may include a claim that the proposed Personal Wireless Service Facility obstructs the views from or blocks the light into any adjacent residential windows. (See Public Works Code § 1509(b)(2).) If your protest contains such a claim, please include with your protest photographs depicting the potential obstruction of the views from or the blocking of the light into your windows so that the Planning Department and/or hearing officer can evaluate this aspect of your protest. The Planning Department may contact you to ask permission to enter into your residence to investigate your claim. If the Planning

Department or hearing officer agrees with your concerns, the City may add certain conditions to its approval of the Application to ameliorate those concerns.

The Applicant does not know at this time whether it will file an Application for a permit to modify the proposed Personal Wireless Service Facility at any time during the term of the Personal Wireless Service Facility Site Permit.

In order to receive correspondence from Public Works, the Applicant, and other interested parties please include with your protest all of the following information: Street address, daytime telephone number, and email address (if available).

To obtain additional information concerning the Application, the tentative approval, or the protest you may contact James Singleton of Mobilitie at 650-814-0564 or JSingleton@mobilitie.com. You may also contact SF Public Works at (415) 554-5343.

For more information on Personal Wireless Service Facilities generally you can also visit www.sf-planning.org/wireless.

Public Works Wireless Program

PERMIT CONDITIONS

Approval of the proposed Personal Wireless Service Facility Site Permit has been recommended by San Francisco Public Works (Bureau of Street-Use and Mapping), San Francisco Department of Public Health, San Francisco Planning Department.

The tentative approval includes the following condition(s) that have been accepted by Applicant:

San Francisco Public Works Conditions:

1. This recommendation is based on no variation from the depicted drawings and/or photo simulation; if a variation is different a re-submittal is required. Should the installation vary from said conditions, it should be resubmitted to Department(s) for further review and comment
2. New Poles: no new poles shall be erected or placed in underground districts.
3. Down Guys: Follow all excavation codes to obtain the necessary permits for placement of down guys. Down guy shall avoid crossing conflicting areas but not limited to driveways, curb ramps.
4. Comply with ADA code requirements for Federal, State, local laws. Make sure path of minimum required clear width for accessible path of travel is four feet.
5. At the conclusion of the work, provide a set of as built photos of the installation to the Bureau Street Use & Mapping Permit Office.
6. Maintain a valid certification of insurance annually and forward a copy to the Bureau Street Use & Mapping Permit Office.

San Francisco Department of Public Health Conditions:

1. Ensure that any equipment associated with the pole installation of this antenna does not produce a noise in excess of 45 dBA as measured at three (3) feet from the nearest residential building façade.
2. Ensure that there are no publicly occupied areas within two and a half (2.50) feet from the face of the antenna.
3. Once the antenna is installed, Mobilitie must take RF power density measurements with the antenna operating at full power to verify the level reported in the Hammett and Edison report and to ensure that the FCC public exposure level is not exceeded in any publicly accessible area. This measurement must be taken again at the time of the permit renewal.
4. Mobilitie should be aware that the general public may have concerns about the antenna and potential RF source near their dwellings. Mobilitie should have in place a procedure for taking RF power density levels in nearby dwellings when requested by the members of the general public.
5. In accordance with the San Francisco Public Works Code, Art. 25, Sec. 1527 (a)(2)(C) Mobilitie is responsible for paying a fee of $210.00 to the San Francisco Department of Public Health for this review.

Please note that this approval and any conditions apply only to the equipment and installation as described. If any changes in the equipment or any increase in the effective radiated power described above are made, a new review by the Department of Public Health must be conducted.

San Francisco Planning Department Conditions:

1. Plant and maintain an appropriate street tree.
2. No exposed meter, meter pan or meter pedestal may be used.
3. Antenna, and all equipment (external conduit, radio relay units, blinders used to shroud bracket bolts [if needed], and mounting mechanisms); except signage, if used for screening, shall all be painted to match the pole and repainted as needed.
4. Cabling below radio relay units shall enter the pole with no more than a five-inch gap between bottom of each radio relay unit and the bottom of the corresponding entry hole on the pole. Conduit connection at pole entry points shall utilize the smallest fitting sizes available. Sealing compounds, if utilized, shall be tidy without excess bubbling and painted to match pole.
5. Remove raised equipment signage (including filling in manufacturer logo indentations on radio relay units/cabinets) and equipment decals that may be visible from sidewalk and dwellings, unless required by government regulation.
6. Utilize smallest RF warning signage allowed (4 x 6 inches); and place the warning sticker facing out toward street, at a location as close to antenna as is feasible. Sticker shall face away from street, when not facing

a nearby window within 15 feet. Background color of sticker shall match the pole-mounting surface; and logo and text shall be white.

7. Stack equipment enclosures (not including antenna) as close as allowed by applicable regulation and manufacturer equipment standards.
8. Seams and bolts/screws at antenna and shroud assembly area shall be fabricated and installed in a manner so as to reduce their visibility (e.g. flush mounting screws) from sidewalk level.
9. Not utilize any visible flashing indicator lights or similar.
10. Not obstruct the view from, or the light into any adjacent residential window.
11. New below ground enclosure excavations (vault), if utilized, shall not damage or remove granite curbs. No significant gaps shall be created between vault enclosure lid and primary sidewalk material due to installation. Any other existing historic architectural elements within the public right-of-way shall be retained and protected during installation. No carrier logo or carrier name may be placed on the vault lid.
12. Non-essential radio relay unit elements (handle and legs) shall be removed.
13. The installer shall arrange to have Planning Department staff review the initial installation, in order to ensure compliance with the aforementioned conditions (notwithstanding inspections by pole owner and Department of Public Works).
14. Ensure Wi-Fi Access Points and associated wiring, utilized by the City's Department of Technology, are not damaged during installation (if present).
15. Should the installation vary from said conditions, the application shall be resubmitted to the Planning Department for further review and comment.

view from Shrader Street looking northwest at site

mobilitie
intelligent infrastructure

9CAB007733 / SF90XS701B
Adjacent to 1509 Shrader Street, San Francisco, CA
Photosims Produced on 2-6-2018

Existing

Proposed

view from Shrader Street looking south at site

mobilitie

9CAB007733 / SF90XS701B
Adjacent to 1509 Shrader Street, San Francisco, CA
Photosims Produced on 2-6-2018

Advance Photo Simulation
Contact (925) 302-0017

关于申请个人无线服务设施场所许可证的暂定批准通知

Mark Farrell
Mayor

Mohammed Nuru
Director

Jerry Sanguinetti
Manager

Street Use and Mapping
1155 Market St., 3rd floor
San Francisco, CA 94103
tel 415-554-5810

sfpublicworks.org
facebook.com/sfpublicworks
twitter.com/sfpublicworks

5/25/2018

公共工程部暂时批准了申请编号为 18WR-0033、由 Mobilitie，LLC 所提交的位于 1509 Shrader St 附近的个人无线服务设施场所许可证申请。该项批准包含本函随附的一些条件。在下发此地点的个人无线服务设施场所许可证之前，可能会修改这些条件。

要在此地点安装的设备包括：安装在电杆顶部的一(1)根天线，一(1)个固定在电杆外侧用于遮蔽 UE 继电器和无线电装置的设备外壳。

如果得到批准，Mobilitie，LLC 可以在此地点安装许可的个人无线服务设施。拟议的个人无线服务设施的仿真照片随附于此。

根据旧金山公共工程法典§1513，您从本通知或邮戳之日起（以较晚者为准）的 20 日内可以对此申请提出抗议。

如欲就申请提出抗议或评论，请按如下地址访问公共工程网站：bsm.sfdpw.org，然后点击“Comment on Permit（许可证评论）”并输入“18WR-0033”或邮寄到以下地址

San Francisco Public Works
Bureau of Street-use and Mapping
1155 Market Street
San Francisco, CA 94103
收件人：Wireless Permit Protests

如果提交了及时抗议，公共工程部门将举行公开听证会，以确定是否批准申请。公共工程部将在稍后的日期通知您有关听证会的日期和时间。

抗议必须基于以下一个或多个理由：

1. 公共卫生部门错误地认定该申请符合公共健康合规标准（参见公共工程法典 §1507）。
2. 规划部门错误地认定该申请符合适用的兼容性标准（参见公共工程法典§1509）。
3. 该申请不符合获得个人无线服务设施场所许可证的任何其他要求。
4. 申请人试图在许可证签发后以不符合适用的兼容性标准的方式修改个人无线服务设施。

如果个人无线服务设施的拟议地点位于住宅或社区商业区划区，则您的抗议可以包括关于拟议的个人无线服务设施妨碍视线或阻挡任何相邻住宅窗户采光的声明。（参见公共工程法典§1509(b)(2)）。如果您的抗议包含此类声明，请附上描述可能妨碍视野或阻挡光线进入您的窗户的抗议照片，以便规划部和/或听证官可以对您的抗议的这一方面进行评估。规划部门可能会与您联系，要求您允许进入您的住宅以对您的声明展开调查。如果规划部门或听证官同意您的担忧，市里可能会在批准申请时增加一些条件来缓解这些担忧。

申请人此时不知道其是否会在个人无线服务设施场所许可期限内的任何时候提出修改拟议的个人无线服务设施许可证的申请。

为了收到公共工程部的信件，请申请人和其他利益相关方在您的抗议中提供以下所有信息：街道地址、日间电话号码和电子邮件地址（如果有）。

要获得有关申请的其他信息和文件，您可以通过 650-814-0564 或 JSingleton@mobilitie.com 联系 Mobilitie 的 James Singleton。您也可以拨打(415) 554-5343 与旧金山公共工程部联系。

有关个人无线服务设施的更多信息，通常您还可以访问 www.sf-planning.org/wireless。

公共工程无线项目

许可条件

旧金山公共工程部（街道使用和测绘局）、旧金山公共卫生部和旧金山规划部建议批准拟议的个人无线服务设施场所许可证。

暂定批准包括申请人已接受的以下条件：

旧金山公共工程部条件：

1. 该建议基于与描绘图和/或模拟照片完全相符；如果存在不同变化，则需要重新提交。如果安装与上述情况不符，则应向各部门重新提交以便进行进一步审查和评论。
2. 新电杆：不应在地面以下区域竖立或放置新的电杆。
3. 向下拉线：按照所有的挖掘法规获得安装向下拉线的必要许可证。向下拉线应避免穿越交会区域，但不限于车道、路边坡道。
4. 遵守联邦、州和地方法律的 ADA 法规要求。 确保可进出通道的最小所需净宽度为 4 英尺。
5. 施工结束后，向街道使用和测绘局许可证办公室提供一套原样安装施工照片。
6. 每年保持一份有效的保险证明，并将副本转发给街道使用和测绘局许可证办公室。

旧金山公共卫生部条件：

- 确保与此天线的电杆安装相关的任何设备在离最近的住宅建筑立面三(3)英尺处测得的噪音不超过 45 dBA。

- 确保距离天线表面二点五(2.50)英尺内没有公共占用区域。

- 一旦安装了天线，Mobilitie 必须在天线以全功率工作的情况下进行射频功率密度测量，以验证 Hammett 和 Edison 报告中报告的电平，并确保在任何公众可接触的区域都不会超过 FCC 公众暴露级别。 在更换许可证时，必须再次进行此项测量。

- Mobilitie 应该意识到，公众可能对住宅附近的天线和潜在的射频源感到担忧。在公众要求的情况下，Mobilitie 应制定出台在附近的住宅进行射频功率密度水平测量的规程。

- 根据旧金山公共工程法典第 25 条第 1527 (a)(2)(C)项，Mobilitie 负责向旧金山公共卫生部门支付 210.00 美元的费用以进行审查。

请注意，此项批准和任何条件仅适用于所述的设备和安装。如果设备发生任何变化或上述有效辐射功率增加，则必须由公共卫生部门进行重新审查。

旧金山规划部条件：

1. 种植和维护适当的行道树。
2. 不可使用暴露的仪表、仪表盘或仪表底座。
3. 天线和所有设备（外部导管、无线电中继单元、用于遮盖支架螺栓的遮罩[如果需要]和安装机构）；除了标牌，如果用于屏幕，都应涂漆以与电杆相配并根据需要重新涂漆。
4. 无线电中继单元下方的布线必须在每个无线电中继单元底部与电杆上相应入口孔底部之间的距离不超过 5 英寸的情况下进入电杆。电杆入口处的导管连接应使用可用的最小接头尺寸。如果使用密封化合物，则应整齐，不得有过多的起泡，并涂漆以与电杆相配。
5. 除非政府法规要求，否则请移除高架设备标志（包括在无线电中继单元/机柜中填充制造商标志凹口）和从人行道和住宅中可能看到的设备标志。

6. 使用允许的最小射频警告标志（4 x 6 英寸）；并将警告标签朝向街道，朝向尽可能接近天线的位

置。标签在不面向附近 15 英尺内的窗户时，应面向远离街道的方向。标签的背景颜色应与立杆表面相匹配；徽标和文字应为白色。

7. 堆叠设备外壳（不包括天线）尽可能接近适用的法规和制造商设备标准许可。
8. 天线和护罩组装区域的接缝和螺栓/螺钉应以降低从人行道高度的可见度的方式进行装配和安装（例如与安装螺钉齐平）。
9. 不使用任何可视的闪烁指示灯或类似物。
10. 不妨碍任何相邻住宅窗户的景观或光线进入。
11. 如果使用新的地下围栏挖掘（拱顶），则不得损坏或去除花岗岩路缘。不得因安装在拱顶外壳盖和主要人行道材料之间产生显著的间隙。公共用地内的任何其他现有的历史建筑元素在安装期间应予以保留和保护。拱顶盖上不得放置运输公司标志或运输公司名称。
12. 应拆除非必要的无线电中继单元元件（手柄和支腿）。
13. 安装方应请规划部工作人员检查初始安装情况，以确保符合上述条件（尽管电杆所有方和公共工程部门会进行检查）。
14. 确保安装期间该市技术部门使用的 Wi-Fi 接入点和相关线路不会受到损坏（如果存在）。
15. 如果安装与上述条件不符，则应将该申请重新提交给规划部门进行进一步审查和评论。

AVISO DE APROBACIÓN TENTATIVA DE LA SOLICITUD PARA UN PERMISO DE SITIO DE INSTALACIÓN DE SERVICIO INALÁMBRICO PERSONAL

Mark Farrell
Mayor

Mohammed Nuru
Director

Jerry Sanguinetti
Manager

Street Use and Mapping
1155 Market St., 3rd floor
San Francisco, CA 94103
tel 415-554-5810

sfpublicworks.org
facebook.com/sfpublicworks
twitter.com/sfpublicworks

5/25/2018

Obras Públicas ha aprobado tentativamente la Solicitud n.º 18WR-0033 presentada por Mobilitie, LLC para un Permiso de sitio de instalación de servicio inalámbrico personal en las cercanías de 1509 Shrader St. La aprobación contiene ciertas condiciones que se adjuntan a esta carta. Estas condiciones se pueden modificar antes de la emisión de un Permiso de sitio de instalación de servicio inalámbrico personal en esta ubicación.

El equipo que se instalará en esta ubicación incluye: Una (1) antena montada en la parte superior del poste, una (1) carcasa de equipo fijada al costado del poste que aloja el relé y la radio del UE.

Si es aprobado, Mobilitie, LLC podrá instalar en esta ubicación el sitio de instalación de servicio inalámbrico personal permitido. A continuación se adjunta una simulación fotográfica del sitio de instalación de servicios inalámbricos personales propuesto.

En conformidad con el Código de Obras Públicas de San Francisco § 1513, usted tiene 20 días a partir de la última fecha de este aviso o el matasellos para protestar contra la Solicitud.

Para enviar una protesta o comentarios sobre la Solicitud, visite el sitio web de Obras Públicas en bsm.sfdpw.org, haga clic en "Comentar sobre el permiso" y escriba "18WR-0033 ", o envíe a la siguiente dirección:

San Francisco Public Works
Bureau of Street-use and Mapping
1155 Market Street
San Francisco, CA 94103
A la atención de: Protestas de permisos inalámbricos

Si se presenta una protesta oportuna, Obras Públicas llevará a cabo una audiencia pública para determinar si otorgar la Solicitud. Obras Públicas le notificará posteriormente a la fecha y hora de la audiencia.

La protesta debe basarse en uno o más de los siguientes motivos:

1. El Departamento de Salud Pública determinó incorrectamente que la Solicitud cumple con el Estándar de Cumplimiento de Salud Pública (vea el Código de Obras Públicas, § 1507).

2. El Departamento de Planificación determinó incorrectamente que la Solicitud cumple con el Estándar de Compatibilidad aplicable (vea el Código de Obras Públicas, § 1509).

3. La Solicitud no cumple con ningún otro requisito para obtener un Permiso de sitio de instalación de servicio inalámbrico personal.

4. El Solicitante tiene la intención de modificar el sitio de instalación de servicio inalámbrico personal después de la emisión del Permiso de una manera que no cumple con el Estándar de Compatibilidad aplicable.

Si la ubicación propuesta para el sitio de instalación de servicios inalámbricos personales se encuentra en un distrito de zonificación comercial residencial o de barrio, su protesta puede incluir un reclamo que indique que el sitio de instalación de servicios inalámbricos personales propuesto obstruye las vistas o bloquea la luz en alguna ventana residencial adyacente. (Consulte el Código de Obras Públicas, § 1509(b)(2)). Si su protesta contiene tal reclamo,

incluya con su protesta fotografías de la posible obstrucción de las vistas o el bloqueo de la luz en sus ventanas para que el Departamento de Planificación y/o el funcionario de audiencias puedan evaluar este aspecto de su protesta. El Departamento de Planificación puede contactarlo para solicitar permiso a fin de ingresar a su residencia para investigar su reclamo. Si el Departamento de Planificación o el funcionario de audiencias están de acuerdo con sus inquietudes, la Ciudad puede agregar ciertas condiciones a la aprobación de la Solicitud para paliar esas inquietudes.

El Solicitante no sabe en este momento si presentará una Solicitud de permiso para modificar el sitio de instalación de servicio inalámbrico personal propuesto en algún momento durante el plazo del Permiso de sitio de instalación de servicio inalámbrico personal.

Para recibir correspondencia de Obras Públicas, del Solicitante y de otras partes interesadas, incluya con su protesta toda la siguiente información: dirección postal, número de teléfono diurno y dirección de correo electrónico (si está disponible).

Para obtener información y documentos adicionales sobre la Solicitud, puede contactarse con James Singleton de Mobilitie al 650-814-0564 o a JSingleton@mobilitie.com. También puede comunicarse con Obras Públicas de San Francisco al (415) 554-5343.

Para obtener más información general sobre los sitios de instalación de servicio inalámbrico personal, también puede visitar www.sf-planning.org/wireless.

Programa inalámbrico de Obras Públicas

CONDICIONES DEL PERMISO

La aprobación del Permiso de sitio de instalación de servicio inalámbrico personal propuesto ha sido recomendada por Obras Públicas de San Francisco (Oficina de Uso y Mapeo de Calles), Departamento de Salud Pública de San Francisco, Departamento de Planificación de San Francisco.

La aprobación tentativa incluye las siguientes condiciones que han sido aceptadas por el Solicitante:

Condiciones de Obras Públicas de San Francisco:

1. Esta recomendación no se basa en ninguna variación de los dibujos representados y/o la simulación fotográfica; si una variación es diferente, se requiere una nueva presentación. En caso de que la instalación varíe con respecto a dichas condiciones, debe volver a enviarse al/los Departamentos para su posterior revisión y comentarios.
2. Nuevos postes: no se deben erigir nuevos postes ni colocarlos en distritos subterráneos.
3. Tirantes: Siga todos los códigos de excavación para obtener los permisos necesarios para la colocación de tirantes. Los tirantes evitarán cruzar áreas conflictivas, como entradas de vehículos, rampas de acera.
4. Cumplir con los requisitos del código ADA para las leyes federales, estatales y locales. Asegurarse de que la ruta de ancho libre mínimo requerido para la ruta de acceso sea de cuatro pies.
5. Al finalizar la obra, proporcionar un conjunto de fotos de la construcción terminada del sitio de instalación a la Oficina de Permisos de Uso y Mapeo de Calles.
6. Mantener una certificación válida de seguro anualmente y reenviar una copia a la Oficina de Permisos de Uso y Mapeo de Calles.

Condiciones del Departamento de Salud Pública de San Francisco:

- Asegúrese de que cualquier equipo asociado con la instalación de esta antena no produzca un ruido superior a 45 dBA medidos a tres (3) pies de la fachada del edificio residencial más cercano.

- Asegúrese de que no haya áreas ocupadas públicamente a dos y medio (2,50) pies de la cara de la antena.

- Una vez instalada la antena, Mobilitie debe tomar mediciones de densidad de potencia de RF con la antena operando a plena potencia para verificar el nivel reportado en el informe de Hammett y Edison y para garantizar que el nivel de exposición pública de la FCC no se exceda en ningún área públicamente accesible. Esta medición debe tomarse nuevamente al momento de la renovación del permiso.

- Mobilitie debe ser consciente de que el público en general puede tener dudas sobre la antena y la posible fuente de RF cerca de sus viviendas. Mobilitie debe tener un procedimiento para tomar los niveles de densidad de potencia de RF en las viviendas cercanas cuando así lo soliciten los miembros del público en general.

- De conformidad con el Código de Obras Públicas de San Francisco, art. 25, Sec. 1527 (a)(2)(C), Mobilitie es responsable de pagar una tarifa de $210,00 al Departamento de Salud Pública de San Francisco para esta revisión.

Tenga en cuenta que esta aprobación y todas las condiciones se aplican solo al equipo y la instalación tal como se describe. Si se realizan cambios en el equipo o hay un aumento en la potencia radiada efectiva descrita anteriormente, se debe realizar una nueva revisión por parte del Departamento de Salud Pública.

Condiciones del Departamento de Planificación de San Francisco:

1. Plante y mantenga un árbol callejero apropiado.
2. No se puede usar ningún medidor expuesto, bandeja de medición o pedestal de medidor.
3. La antena y todo el equipo (conducto externo, unidades de relé de radio, anteojeras utilizadas para proteger los pernos del soporte [si es necesario] y mecanismos de montaje), excepto la señalización, si se usa para el cribado, se pintarán para que coincidan con el poste y se repintarán según sea necesario.
4. El cableado debajo de las unidades de relé de radio debe ingresar al poste con un espacio de no más de cinco pulgadas entre la parte inferior de cada unidad de relé de radio y la parte inferior del orificio de entrada correspondiente en el poste. La conexión del conducto en los puntos de entrada del poste deberá utilizar los tamaños de conexión más pequeños disponibles. Los compuestos de sellado, si se utilizan, deben estar ordenados, sin exceso de burbujas, y pintados a tono con el poste.
5. Retire la señalización del equipo elevado (incluido el rellenado de las marcas del logotipo del fabricante en las unidades/armarios de relé de radio) y las calcomanías de los equipos que puedan verse desde la acera y las viviendas, a menos que lo exija la normativa gubernamental.

6. Utilice la señalización de advertencia de RF más pequeña permitida (4 x 6 pulgadas); y coloque la pegatina de advertencia mirando hacia la calle, en un lugar lo más cercano posible a la antena. La pegatina estará orientada en sentido contrario a la calle, cuando no esté orientada frente a una ventana a 15 pies o menos de distancia. El color de fondo de la pegatina debe coincidir con la superficie de montaje del poste; y el logo y el texto deben ser blancos.
7. Apile los recintos de los equipos (sin incluir la antena) lo más cerca que permita la normativa aplicable y los estándares del equipo del fabricante.
8. Las costuras y pernos/tornillos en el área de montaje de la antena y la cubierta se deben fabricar e instalar de manera tal que reduzca su visibilidad (por ejemplo, tornillos de montaje a ras) desde el nivel de la acera.
9. No utilice luces indicadoras intermitentes visibles o similares.
10. No obstruya la vista desde, ni la luz en ninguna ventana residencial adyacente.
11. Las nuevas excavaciones de cubierta subterránea (bóveda), si se utilizan, no deberán dañar ni eliminar los bordillos de granito. No se generarán espacios significativos entre la tapa de la caja de la bóveda y el material de la acera principal debido a la instalación. Cualquier otro elemento arquitectónico histórico existente dentro del derecho de paso público deberá conservarse y protegerse durante la instalación. No se puede colocar el logotipo o nombre del transportista en la tapa de la bóveda.
12. Los elementos de la unidad de relé de radio no esenciales (asa y patas) deben quitarse.
13. El instalador hará los arreglos necesarios para que el personal del Departamento de Planificación revise la instalación inicial, a fin de garantizar el cumplimiento de las condiciones antes mencionadas (sin perjuicio de las inspecciones del propietario del poste y del Departamento de Obras Públicas).
14. Asegúrese de que los puntos de acceso wifi y el cableado asociado, utilizados por el Departamento de Tecnología de la ciudad, no sufran daños durante la instalación (si están presentes).
15. En caso de que la instalación varíe con respecto a dichas condiciones, la solicitud se volverá a enviar al Departamento de Planificación para su posterior revisión y comentarios.

PAUNAWA SA PANSAMANTALANG PAG-APRUBA NG APLIKASYON PARA SA PERSONAL WIRELESS SERVICE FACILITY SITE PERMIT

Mark Farrell
Mayor

Mohammed Nuru
Director

Jerry Sanguinetti
Manager

Street Use and Mapping
1155 Market St., 3rd floor
San Francisco, CA 94103
tel 415-554-5810

sfpublicworks.org
facebook.com/sfpublicworks
twitter.com/sfpublicworks

5/25/2018

Pansamantalang inaprubahan ng Public Works ang Aplikasyon Blg. 18WR-0033 na isinumite ng Mobilitie, LLC para sa isang Personal Wireless Service Facility Site Permit sa paligid ng 1509 Shrader St. Ang pag-apruba ay naglalaman ng ilang mga kondisyon na nakalakip sa liham na ito. Ang mga kondisyong ito ay maaaring mabago bago ang pagpapalabas ng Personal Wireless Service Facility Site Permit sa lugar na ito.

Ang kagamitan na mai-install sa lugar na ito ay kinabibilangan ng: Isang (1) antenna na naka-mount sa tuktok ng poste, isang (1) bakod ng kagamitan na nakakabit sa tagiliran ng poste kung saan nakalagay ang UE Relay at radyo.

Kung maaaprubahan, maaaring i-install ng Mobilitie, LLC ang pinahihintulutang Personal Wireless Service Facility sa lokasyong ito. Isang litratong simulation ng ipinapanukalang Personal Wireless Service Facility ang nakalakip dito.

Alinsunod sa San Francisco Public Works Code § 1513, mayroon kang 20 araw mula sa mas nahuhuli sa petsa sa paunawang ito o ang marka sa koreo upang iprotesta ang Aplikasyon.

Upang magsumite ng isang protesta sa/o mga komento sa Aplikasyon, mangyaring bisitahin ang website ng Public Works sa sumusunod na address: bsm.sfdpw.org at i-klik ang "Magkomento sa Permit" at ipasok ang "18WR-0033 " o ipadala sa sumusunod na address:

San Francisco Public Works
Bureau of Street-use and Mapping
1155 Market Street
San Francisco, CA 94103
Attn: Wireless Permit Protests

Kung may isusumiteng protesta sa takdang panahon, magdaraos ang Public Works ng pampublikong pagdinig upang magpasya kung aaprubahan ang Aplikasyon. Aabisuhan ka ng Public Works sa ibang araw tungkol sa petsa at oras para sa pagdinig.

Ang protesta ay kailangang batay sa isa o higit pa sa mga sumusunod na dahilan:

1. Mali ang pagpapasiya ng Kagawaran ng Pampublikong Kalusugan na ang Aplikasyon ay sumusunod sa Pamantayan sa Pagsunod sa Pampublikong Kalusugan (tingnan ang Public Works Code § 1507).

2. Mali ang pagpapasiya ng Kagawaran ng Pagpaplano na ang Aplikasyon ay tumutugon sa naaangkop na Pamantayan ng Pagkakabagay (tingnan ang Public Works Code § 1509).

3. Ang Aplikasyon ay hindi sumusunod sa anumang iba pang kinakailangan para sa pagkuha ng isang Personal Wireless Service Facility Site Permit.

4. Binabalak baguhin ng aplikante ang Personal Wireless Service Facility pagkatapos na maibigay ang Permit sa paraang hindi tumutupad sa naaangkop na Pamantayan ng Pagkakabagay.

Kung ang ipinapanukalang lokasyon para sa Personal Wireless Service Facility ay nasa isang zoning district na pangresidensya o pangkomersyo sa kapitbahayan, maaaring isama sa iyong protesta ang claim na ang iminumungkahing Personal Wireless Service Facility ay makakaharang ng tanawin mula sa o ng liwanag papunta

sa anumang katabing mga bintana ng tirahan. (Tingnan ang Public Works Code § 1509(b)(2).) Kung naglalaman ang iyong protesta ng ganoong claim, pakisama sa iyong protesta ang mga litrato na naglalarawan sa mga posibleng makakaharang ng mga tanawin mula sa o liwanag sa iyong mga bintana upang mapag-aralan ng Kagawaran ng Pagpaplano at/o opisyal ng pagdinig ang aspetong ito ng iyong protesta. Maaaring makipag-ugnayan sa iyo ang Kagawaran ng Pagpaplano upang humingi ng pahintulot na pumasok sa iyong tirahan para siyasatin ang iyong claim. Kung sumasang-ayon ang Kagawaran ng Pagpaplano o opisyal ng pagdinig sa iyong mga ipinag-aalala, maaaring magdagdag ang Lungsod ng ilang mga kondisyon sa pag-apruba nito sa Aplikasyon upang mapagaan ang mga pag-aalalang iyon.

Hindi alam ng Aplikante sa oras na ito kung ito ay maghahain ng isang Aplikasyon para sa isang permit na baguhin ang ipinapanukalang Personal Wireless Service Facility sa anumang oras sa panahon ng termino ng Personal Wireless Service Facility Site Permit.

Upang makatanggap ng mga liham mula sa Public Works, Aplikante, at iba pang mga interesadong partido mangyaring isama sa iyong protesta ang lahat ng sumusunod na impormasyon: Address ng kalye, numero ng telepono sa araw, at email address (kung mayroon).

Upang makakuha ng karagdagang impormasyon at mga dokumento tungkol sa Aplikasyon, maaari kang makipag-ugnay kay James Singleton ng Mobilitie sa 650-814-0564 o JSingleton@mobilitie.com . Maaari mo ring kontakin ang SF Public Works sa (415) 554-5343.

Para sa higit pang impormasyon tungkol sa Personal Wireless Service Facilities sa kalahatan maaari mo ring bisitahin ang www.sf-planning.org/wireless.

Public Works Wireless Program

MGA KONDISYON NG PERMIT

Inirerekomenda ng San Francisco Public Works (Bureau of Street-Use and Mapping), San Francisco Department of Public Health, San Francisco Planning Department ang pag-apruba sa ipinapanukalang Personal Wireless Service Facility Site Permit.

Kasama sa pansamantalang pag-apruba ang sumusunod na (mga) kondisyon na tinanggap ng Aplikante:

Mga Kondisyon ng San Francisco Public Works:

1. Ang rekomendasyong ito ay batay sa kondisyong walang kaibhan (variation) mula sa mga ipinakitang guhit at/o litratong simulation; kung ang isang kaibhan ay naiiba kinakailangan ang muling pagsusumite. Kung iba ang pag-install mula sa mga naturang kondisyon, dapat itong muling isumite sa (mga) Kagawaran para sa karagdagang pagsusuri at komento
2. Mga Bagong Poste: walang bagong poste ang itatayo o ilalagay sa mga distritong nasa ilalim ng lupa.
3. Down Guys: Sundin ang lahat ng code sa paghuhukay upang makuha ang mga kinakailangang permit para sa paglalagay ng down guys. Dapat iwasang tawirin ng down guys ang magkakasalungat na lugar ngunit hindi limitado sa mga daanan ng sasakyan, mga rampa ng kurbada.
4. Sumunod sa mga kinakailangan ng ADA code para sa Federal, Estado, mga lokal na batas. Tiyakin na ang daan ng pinakamababang kinakailangang lapad ng espasyo para sa daraanan ay apat na talampakan.
5. Sa pagtatapos ng trabaho, magbigay ng isang grupo ng mga litrato ng naitayo nang installation sa Bureau Street Use & Mapping Permit Office.
6. Panatilihin ang isang balidong sertipikasyon ng seguro taun-taon at magsumite ng isang kopya sa Bureau Street Use & Mapping Permit Office.

Mga Kondisyon ng Kagawaran ng Pampublikong Kalusugan ng San Francisco:

- Tiyakin na ang anumang mga kagamitan na nauugnay sa pag-install ng poste ng antenna na ito ay hindi gumagawa ng ingay na lampas sa 45 dBA na nasusukat sa tatlong (3) talampakan mula sa pinakamalapit na harapan ng gusaling tirahan.

- Tiyakin na walang mga lugar na okupado ng publiko sa loob ng dalawa at kalahating (2.50) talampakan mula sa mukha ng antenna.

- Sa sandaling ma-install na ang antenna, kailangang sukatin ng Mobilitie ang RF power density habang gumagana ang antenna sa sukdulang lakas upang beripikahin ang antas na iniulat sa Hammett and Edison report at upang matiyak na ang antas ng pagkakalantad ng publiko ayon sa FCC ay hindi nalalampasan sa anumang lugar na naa-access ng publiko. Ang pagsukat na ito ay kailangang gawin muli sa panahon ng pag-renew ng permit.

- Dapat malaman ng Mobilitie na maaaring may mga ipinag-aalala ang kalahatang publiko tungkol sa antenna at posibleng pagmumulan ng RF na malapit sa kanilang mga tirahan. Dapat ay may pamamaraan ang Mobilitie sa pagkuha ng mga antas ng density ng lakas ng RF sa mga kalapit na tirahan kapag hiniling ng mga miyembro ng kalahatang publiko.

- Alinsunod sa San Francisco Public Works Code, Art. 25, Sec. 1527 (a)(2)(C) ang Mobilitie ay may pananagutang magbayad ng $ 210.00 sa Kagawaran ng Pampublikong Kalusugan ng San Francisco para sa pagsusuring ito.

Mangyaring tandaan na ang pag-aprubang ito at anumang mga kondisyon ay nalalapat lamang sa kagamitan at installation tulad ng inilarawan. Kung may gagawing anumang mga pagbabago sa kagamitan o anumang pagtaas sa epektibong radiated power na

inilarawan sa itaas, isang bagong pagsusuri ng Kagawaran ng Pampublikong Kalusugan ang kailangang isagawa.

Mga Kondisyon ng Kagawaran ng Pagpaplano ng San Francisco:

1. Magtanim at magpanatili ang naaangkop na puno sa kalye.
2. Walang nakalantad na meter, meter pan o meter pedestal ang maaaring gamitin.
3. Ang antenna, at lahat ng mga kagamitan (panlabas na tubo, mga relay unit ng radyo, mga blinder na ginamit upang balutin ang mga bracket bolt [kung kinakailangan], at mga mekanismo ng pag-mount); maliban sa signage, kung gagamitin para sa screening, ay pipinturahan lahat upang tumugma sa poste at muling pipinturahan kung kinakailangan.
4. Ang kable sa ilalim ng mga relay unit ng radyo ay dapat pumasok sa poste nang hindi hihigit sa limang-pulgada ang puwang sa pagitan ng ilalim ng bawat relay unit ng radyo at sa ilalim ng kaukulang butas ng pagpasok sa poste. Ang koneksyon sa tubo sa mga entry point ng poste ay dapat gumamit ng pinakamaliit na sukat na makukuha. Ang mga sealing compound, kung ginagamit, ay dapat malinis na walang labis na bulubok at pininturahan upang tumugma sa poste.
5. Alisin ang nakaangat na signage ng kagamitan (kabilang ang mga nakabaon na marka ng logo ng tagagawa sa mga relay unit/cabinet ng radio) at equipment decal na maaaring nakikita mula sa bangketa at tirahan, maliban kung ipinag-uutos ng regulasyon ng pamahalaan.
6. Gamitin ang pinakamaliit na RF warning signage na pinapayagan (4 x 6 na pulgada); at ilagay ang sticker ng babala na nakaharap sa kalye, sa isang lokasyong pinakamalapit sa antenna hanggat maaari. Dapat nakaturo ang sticker palayo sa kalye, kapag hindi nakaharap sa isang kalapit na bintana sa loob ng 15 talampakan. Ang kulay ng background ng sticker ay dapat tumugma sa ibabaw kung saan naka-mount ang poste; at ang logo at teksto ay dapat na puti.
7. Itabi ang mga bakod ng kagamitan (hindi kasama ang antenna) sa pinakamalapit na pinahihintulutan ng mga naaangkop na regulasyon at mga pamantayan sa kagamitan ng tagagawa.
8. Ang mga gilid at bolt/screw sa antenna at shroud assembly area ay dapat na gawin at mai-install sa paraang hindi gaanong nakikita ang mga ito (hal. flush mounting screws) mula sa bangketa.
9. Huwag gumamit ng anumang nakikitang mga ilaw na kumikislap-kislap o katulad nito.
10. Huwag harangan ang tanawin mula sa, o ang ilaw sa katabing bintana ng tirahan.
11. Kung gagamit ng bagong mga paghukay ng bakod (vault) sa ilalim ng lupa, hindi dapat ito makapinsala o magtanggal ng mga granite sa kurbada. Walang malalaking puwang ang dapat na malikha sa pagitan ng vault enclosure lid at materyal ng pangunahing bangketa sanhi ng pag-install. Ang anumang iba pang mga kasalukuyang makasaysayang elemento ng arkitektura sa loob ng pampublikong karapatan sa daan ay mananatili at poprotektahan sa panahon ng pag-install. Walang logo ng carrier o pangalan ng carrier ang maaaring ilagay sa takip ng vault.
12. Ang mga hindi kinakailangang elemento ng relay unit ng radyo (hawakan at binti) ay aalisin.
13. Dapat asikasuhin ng taga-install na masuri ng tauhan ng Kagawaran ng Pagpaplano ang paunang pag-install, upang masigurong sinusunod ang mga naunang nabanggit na kondisyon (sa kabila ng mga pag-iinspeksyon ng may-ari ng poste at Department of Public Works).
14. Tiyakin na ang Mga Wi-Fi Access Point at kaugnay na mga kable, na ginagamit ng Kagawaran ng Teknolohiya ng Lunsod, ay hindi napinsala sa panahon ng pag-install (kung mayroon).
15. Kung naiiba ang pag-install mula sa mga nasabing kondisyon, ang aplikasyon ay dapat muling isumite sa Kagawaran ng Pagpaplano para sa karagdagang pagsusuri at komento.

STATE OF CALIFORNIA)

COUNTY OF SAN FRANCISCO)

DECLARATION OF MAILING RE: NOTICE OF TENTATIVE APPROVAL OF APPLICATION FOR A PERSONAL WIRELESS SERVICE FACILITY SITE PERMIT

Luis Martinez do hereby declare as follows:

1. I am a_Network Real Estate Specialist_ at Mobilitie LLC. I am over 18 years of age and I am a resident of Riverside County, State of California.

2. On May 30, 2018 I caused to be mailed and/or distributed a copy of "NOTICE OF TENTATIVE APPROVAL OF APPLICATION FOR A PERSONAL WIRELESS SERVICE FACILITY SITE PERMIT" to the following location(s) within the 150 foot boundaries of the proposed site and also including neighborhood association within 300 foot boundaries of site and the list is compliant with Public Works Code 1512 (b)(1):

   a. See Attached Map 1509 Shrader St
   See Attached Mailing List
   See Attached Notice
   See Attached Envelope

3. The attached list was prepared using the latest available data per the County Assessor's Office by Radius Services.

I declare under penalty of perjury under the laws of the State of California that the foregoing is true and correct.

Executed 5/30/2018 at Orange County, California.

By: _____

Luis Martinez

18WR-0033
1509 Shrader St

Exhibit E: Declaration of Posting Re: Posting of Notice of Tentative Approval of Application for a Personal Wireless Service Facility Site

NOTICE OF TENTATIVE APPROVAL OF APPLICATION FOR A PERSONAL WIRELESS SERVICE FACILITY SITE PERMIT

Mark Farrell
Mayor

Mohammed Nuru
Director

Jerry Sanguinetti
Manager

Street Use and Mapping
1155 Market St., 3rd floor
San Francisco, CA 94103
tel 415-554-5810

sfpublicworks.org
facebook.com/sfpublicworks
twitter.com/sfpublicworks

5/25/2018

Public Works has tentatively approved the Application No. 18WR-0033 submitted by Mobilitie, LLC for a Personal Wireless Service Facility Site Permit in the vicinity of 1509 Shrader Street. The approval contains certain conditions that are attached to this letter. These conditions may be modified prior to the issuance of a Personal Wireless Service Facility Site Permit at this location.

The equipment to be installed at this location include: One (1) antenna, one (1) equipment enclosure housing UE Relay and radio.

If approved, Mobilitie, LLC may install the permitted Personal Wireless Service Facility at this location. A photo-simulation of the proposed Personal Wireless Service Facility is attached hereto.

Pursuant to San Francisco Public Works Code § 1513, you have 20 days from the later of the date on this notice or the postmark to protest the Application.

To submit a protest of/or comments on the Application please visit the Public Works website at the following address: bsm.sfdpw.org and click "Comment on Permit" and enter "18WR-0033 " or send to the following address:

San Francisco Public Works
Bureau of Street-use and Mapping
1155 Market Street
San Francisco, CA 94103
Attn: Wireless Permit Protests

If a timely protest is submitted, Public Works will hold a public hearing to determine whether to grant the Application. Public Works will notify you at a later date of the date and time for the hearing.

The protest must be based on one or more of the following grounds:

1. The Department of Public Health incorrectly determined that the Application complies with the Public Health Compliance Standard (see Public Works Code § 1507).

2. The Planning Department incorrectly determined that the Application meets the applicable Compatibility Standard (see Public Works Code § 1509).

3. The Application does not comply with any other requirement for obtaining a Personal Wireless Service Facility Site Permit.

4. The Applicant intends to modify the Personal Wireless Service Facility after the Permit is issued in a manner that would not comply with the applicable Compatibility Standard.

If the proposed location for the Personal Wireless Service Facility is in a residential or neighborhood commercial zoning district your protest may include a claim that the proposed Personal Wireless Service Facility obstructs the views from or blocks the light into any adjacent residential windows. (See Public Works Code § 1509(b)(2).) If your protest contains such a claim, please include with your protest photographs depicting the potential obstruction of the views from or the blocking of the light into your windows so that the Planning Department and/or hearing officer can evaluate this aspect of your protest. The Planning Department may contact you to ask permission to enter into your residence to investigate your claim. If the Planning

Department or hearing officer agrees with your concerns, the City may add certain conditions to its approval of the Application to ameliorate those concerns.

The Applicant does not know at this time whether it will file an Application for a permit to modify the proposed Personal Wireless Service Facility at any time during the term of the Personal Wireless Service Facility Site Permit.

In order to receive correspondence from Public Works, the Applicant, and other interested parties please include with your protest all of the following information: Street address, daytime telephone number, and email address (if available).

To obtain additional information concerning the Application, the tentative approval, or the protest you may contact James Singleton of Mobilitie at 650-814-0564 or JSingleton@mobilitie.com. You may also contact SF Public Works at (415) 554-5343.

For more information on Personal Wireless Service Facilities generally you can also visit www.sf-planning.org/wireless.

Public Works Wireless Program

PERMIT CONDITIONS

Approval of the proposed Personal Wireless Service Facility Site Permit has been recommended by San Francisco Public Works (Bureau of Street-Use and Mapping), San Francisco Department of Public Health, San Francisco Planning Department.

The tentative approval includes the following condition(s) that have been accepted by Applicant:

San Francisco Public Works Conditions:

1. This recommendation is based on no variation from the depicted drawings and/or photo simulation; if a variation is different a re-submittal is required. Should the installation vary from said conditions, it should be resubmitted to Department(s) for further review and comment
2. New Poles: no new poles shall be erected or placed in underground districts.
3. Down Guys: Follow all excavation codes to obtain the necessary permits for placement of down guys. Down guy shall avoid crossing conflicting areas but not limited to driveways, curb ramps.
4. Comply with ADA code requirements for Federal, State, local laws. Make sure path of minimum required clear width for accessible path of travel is four feet.
5. At the conclusion of the work, provide a set of as built photos of the installation to the Bureau Street Use & Mapping Permit Office.
6. Maintain a valid certification of insurance annually and forward a copy to the Bureau Street Use & Mapping Permit Office.

San Francisco Department of Public Health Conditions:

1. Ensure that any equipment associated with the pole installation of this antenna does not produce a noise in excess of 45 dBA as measured at three (3) feet from the nearest residential building façade.
2. Ensure that there are no publicly occupied areas within two and a half (2.50) feet from the face of the antenna.
3. Once the antenna is installed, Mobilitie must take RF power density measurements with the antenna operating at full power to verify the level reported in the Hammett and Edison report and to ensure that the FCC public exposure level is not exceeded in any publicly accessible area. This measurement must be taken again at the time of the permit renewal.
4. Mobilitie should be aware that the general public may have concerns about the antenna and potential RF source near their dwellings. Mobilitie should have in place a procedure for taking RF power density levels in nearby dwellings when requested by the members of the general public.
5. In accordance with the San Francisco Public Works Code, Art. 25, Sec. 1527 (a)(2)(C) Mobilitie is responsible for paying a fee of $210.00 to the San Francisco Department of Public Health for this review.

Please note that this approval and any conditions apply only to the equipment and installation as described. If any changes in the equipment or any increase in the effective radiated power described above are made, a new review by the Department of Public Health must be conducted.

San Francisco Planning Department Conditions:

1. Plant and maintain an appropriate street tree.
2. No exposed meter, meter pan or meter pedestal may be used.
3. Antenna, and all equipment (external conduit, radio relay units, blinders used to shroud bracket bolts [if needed], and mounting mechanisms); except signage, if used for screening, shall all be painted to match the pole and repainted as needed.
4. Cabling below radio relay units shall enter the pole with no more than a five-inch gap between bottom of each radio relay unit and the bottom of the corresponding entry hole on the pole. Conduit connection at pole entry points shall utilize the smallest fitting sizes available. Sealing compounds, if utilized, shall be tidy without excess bubbling and painted to match pole.
5. Remove raised equipment signage (including filling in manufacturer logo indentations on radio relay units/cabinets) and equipment decals that may be visible from sidewalk and dwellings, unless required by government regulation.
6. Utilize smallest RF warning signage allowed (4 x 6 inches); and place the warning sticker facing out toward street, at a location as close to antenna as is feasible. Sticker shall face away from street, when not facing

a nearby window within 15 feet. Background color of sticker shall match the pole-mounting surface; and logo and text shall be white.

7. Stack equipment enclosures (not including antenna) as close as allowed by applicable regulation and manufacturer equipment standards.
8. Seams and bolts/screws at antenna and shroud assembly area shall be fabricated and installed in a manner so as to reduce their visibility (e.g. flush mounting screws) from sidewalk level.
9. Not utilize any visible flashing indicator lights or similar.
10. Not obstruct the view from, or the light into any adjacent residential window.
11. New below ground enclosure excavations (vault), if utilized, shall not damage or remove granite curbs. No significant gaps shall be created between vault enclosure lid and primary sidewalk material due to installation. Any other existing historic architectural elements within the public right-of-way shall be retained and protected during installation. No carrier logo or carrier name may be placed on the vault lid.
12. Non-essential radio relay unit elements (handle and legs) shall be removed.
13. The installer shall arrange to have Planning Department staff review the initial installation, in order to ensure compliance with the aforementioned conditions (notwithstanding inspections by pole owner and Department of Public Works).
14. Ensure Wi-Fi Access Points and associated wiring, utilized by the City's Department of Technology, are not damaged during installation (if present).
15. Should the installation vary from said conditions, the application shall be resubmitted to the Planning Department for further review and comment.

view from Shrader Street looking northwest at site

mobilitie
intelligent infrastructure

9CAB007733 / SF90XS701B
Adjacent to 1509 Shrader Street, San Francisco, CA
Photosims Produced on 2-6-2018

Existing

Proposed

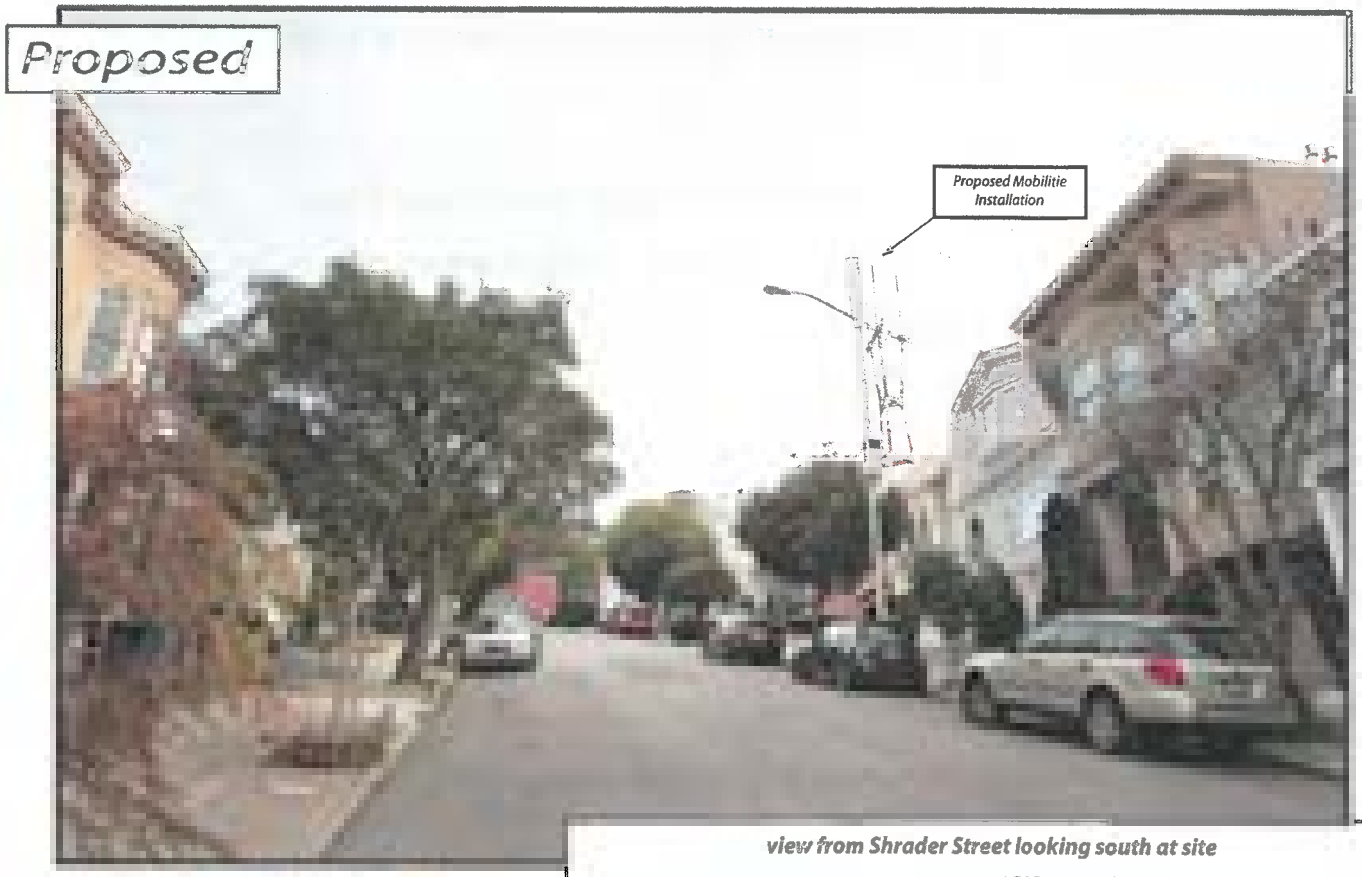

view from Shrader Street looking south at site

mobilitie
intelligent infrastructure

9CAB007733 / SF90XS701B
Adjacent to 1509 Shrader Street, San Francisco, CA
Photosims Produced on 2-6-2018

Advance
Photo Simulation
Contact (925) 202-5507

关于申请个人无线服务设施场所许可证的暂定批准通知

Mark Farrell
Mayor

Mohammed Nuru
Director

Jerry Sanguinetti
Manager

Street Use and Mapping
1155 Market St., 3rd floor
San Francisco, CA 94103
tel 415-554-5810

sfpublicworks.org
facebook.com/sfpublicworks
twitter.com/sfpublicworks

5/25/2018

公共工程部暂时批准了申请编号为 18WR-0033、由 Mobilitie，LLC 所提交的位于 1509 Shrader St 附近的个人无线服务设施场所许可证申请。该项批准包含本函随附的一些条件。在下发此地点的个人无线服务设施场所许可证之前，可能会修改这些条件。

要在此地点安装的设备包括：安装在电杆顶部的一(1)根天线，一(1)个固定在电杆外侧用于遮蔽 UE 继电器和无线电装置的设备外壳。

如果得到批准，Mobilitie，LLC 可以在此地点安装许可的个人无线服务设施。拟议的个人无线服务设施的仿真照片随附于此。

根据旧金山公共工程法典§1513，您从本通知或邮戳之日起（以较晚者为准）的 20 日内可以对此申请提出抗议。

如欲就申请提出抗议或评论，请按如下地址访问公共工程网站：bsm.sfdpw.org，然后点击“Comment on Permit（许可证评论）”并输入“18WR-0033”或邮寄到以下地址：

San Francisco Public Works
Bureau of Street-use and Mapping
1155 Market Street
San Francisco, CA 94103
收件人：Wireless Permit Protests

如果提交了及时抗议，公共工程部门将举行公开听证会，以确定是否批准申请。公共工程部将在稍后的日期通知您有关听证会的日期和时间。

抗议必须基于以下一个或多个理由：

1. 公共卫生部门错误地认定该申请符合公共健康合规标准（参见公共工程法典 §1507）。
2. 规划部门错误地认定该申请符合适用的兼容性标准（参见公共工程法典§1509）。
3. 该申请不符合获得个人无线服务设施场所许可证的任何其他要求。
4. 申请人试图在许可证签发后以不符合适用的兼容性标准的方式修改个人无线服务设施。

如果个人无线服务设施的拟议地点位于住宅或社区商业区划区，则您的抗议可以包括关于拟议的个人无线服务设施妨碍视线或阻挡任何相邻住宅窗户采光的声明。（参见公共工程法典§1509(b)(2)）。如果您的抗议包含此类声明，请附上描述可能妨碍视野或阻挡光线进入您的窗户的抗议照片，以便规划部和/或听证官可以对您的抗议的这一方面进行评估。规划部门可能会与您联系，要求您允许进入您的住宅以对您的声明展开调查。如果规划部门或听证官同意您的担忧，市里可能会在批准申请时增加一些条件来缓解这些担忧。

申请人此时不知道其是否会在个人无线服务设施场所许可期限内的任何时候提出修改拟议的个人无线服务设施许可证的申请。

为了收到公共工程部的信件，请申请人和其他利益相关方在您的抗议中提供以下所有信息：街道地址、日间电话号码和电子邮件地址（如果有）。

要获得有关申请的其他信息和文件，您可以通过 650-814-0564 或 JSingleton@mobilitie.com 联系 Mobilitie 的 James Singleton。您也可以拨打(415) 554-5343 与旧金山公共工程部联系。

有关个人无线服务设施的更多信息，通常您还可以访问 www.sf-planning.org/wireless。

公共工程无线项目

许可条件

旧金山公共工程部（街道使用和测绘局）、旧金山公共卫生部和旧金山规划部建议批准拟议的个人无线服务设施场所许可证。

暂定批准包括申请人已接受的以下条件：

旧金山公共工程部条件：

1. 该建议基于与描绘图和/或模拟照片完全相符；如果存在不同变化，则需要重新提交。如果安装与上述情况不符，则应向各部门重新提交以便进行进一步审查和评论。
2. 新电杆：不应在地面以下区域竖立或放置新的电杆。
3. 向下拉线：按照所有的挖掘法规获得安装向下拉线的必要许可证。向下拉线应避免穿越交会区域，但不限于车道、路边坡道。
4. 遵守联邦、州和地方法律的 ADA 法规要求。 确保可进出通道的最小所需净宽度为 4 英尺。
5. 施工结束后，向街道使用和测绘局许可证办公室提供一套原样安装施工照片。
6. 每年保持一份有效的保险证明，并将副本转发给街道使用和测绘局许可证办公室。

旧金山公共卫生部条件：

- 确保与此天线的电杆安装相关的任何设备在离最近的住宅建筑立面三(3)英尺处测得的噪音不超过 45 dBA。

- 确保距离天线表面二点五(2.50)英尺内没有公共占用区域。

- 一旦安装了天线，Mobilitie 必须在天线以全功率工作的情况下进行射频功率密度测量，以验证 Hammett 和 Edison 报告中报告的电平，并确保在任何公众可接触的区域都不会超过 FCC 公众暴露级别。 在更换许可证时，必须再次进行此项测量。

- Mobilitie 应该意识到，公众可能对住宅附近的天线和潜在的射频源感到担忧。在公众要求的情况下，Mobilitie 应制定出台在附近的住宅进行射频功率密度水平测量的规程。

- 根据旧金山公共工程法典第 25 条第 1527 (a)(2)(C)项，Mobilitie 负责向旧金山公共卫生部门支付 210.00 美元的费用以进行审查。

请注意，此项批准和任何条件仅适用于所述的设备和安装。如果设备发生任何变化或上述有效辐射功率增加，则必须由公共卫生部门进行重新审查。

旧金山规划部条件：

1. 种植和维护适当的行道树。
2. 不可使用暴露的仪表、仪表盘或仪表底座。
3. 天线和所有设备（外部导管、无线电中继单元、用于遮盖支架螺栓的遮罩[如果需要]和安装机构）；除了标牌，如果用于屏幕，都应涂漆以与电杆相配并根据需要重新涂漆。
4. 无线电中继单元下方的布线必须在每个无线电中继单元底部与电杆上相应入口孔底部之间的距离不超过 5 英寸的情况下进入电杆。电杆入口处的导管连接应使用可用的最小接头尺寸。如果使用密封化合物，则应整齐，不得有过多的起泡，并涂漆以与电杆相配。
5. 除非政府法规要求，否则请移除高架设备标志（包括在无线电中继单元/机柜中填充制造商标志凹口）和从人行道和住宅中可能看到的设备标志。

6. 使用允许的最小射频警告标志（4 x 6 英寸）；并将警告标签朝向街道，朝向尽可能接近天线的位

置。标签在不面向附近 15 英尺内的窗户时，应面向远离街道的方向。标签的背景颜色应与立杆表面相匹配；徽标和文字应为白色。

7. 堆叠设备外壳（不包括天线）尽可能接近适用的法规和制造商设备标准许可。
8. 天线和护罩组装区域的接缝和螺栓/螺钉应以降低从人行道高度的可见度的方式进行装配和安装（例如与安装螺钉齐平）。
9. 不使用任何可视的闪烁指示灯或类似物。
10. 不妨碍任何相邻住宅窗户的景观或光线进入。
11. 如果使用新的地下围栏挖掘（拱顶），则不得损坏或去除花岗岩路缘。不得因安装在拱顶外壳盖和主要人行道材料之间产生显著的间隙。公共用地内的任何其他现有的历史建筑元素在安装期间应予以保留和保护。拱顶盖上不得放置运输公司标志或运输公司名称。
12. 应拆除非必要的无线电中继单元元件（手柄和支腿）。
13. 安装方应请规划部工作人员检查初始安装情况，以确保符合上述条件（尽管电杆所有方和公共工程部门会进行检查）。
14. 确保安装期间该市技术部门使用的 Wi-Fi 接入点和相关线路不会受到损坏（如果存在）。
15. 如果安装与上述条件不符，则应将该申请重新提交给规划部门进行进一步审查和评论。

AVISO DE APROBACIÓN TENTATIVA DE LA SOLICITUD PARA UN PERMISO DE SITIO DE INSTALACIÓN DE SERVICIO INALÁMBRICO PERSONAL

Mark Farrell
Mayor

Mohammed Nuru
Director

Jerry Sanguinetti
Manager

Street Use and Mapping
1155 Market St., 3rd floor
San Francisco, CA 94103
tel 415-554-5810

sfpublicworks.org
facebook.com/sfpublicworks
twitter.com/sfpublicworks

5/25/2018

Obras Públicas ha aprobado tentativamente la Solicitud n.º 18WR-0033 presentada por Mobilitie, LLC para un Permiso de sitio de instalación de servicio inalámbrico personal en las cercanías de 1509 Shrader St. La aprobación contiene ciertas condiciones que se adjuntan a esta carta. Estas condiciones se pueden modificar antes de la emisión de un Permiso de sitio de instalación de servicio inalámbrico personal en esta ubicación.

El equipo que se instalará en esta ubicación incluye: Una (1) antena montada en la parte superior del poste, una (1) carcasa de equipo fijada al costado del poste que aloja el relé y la radio del UE.

Si es aprobado, Mobilitie, LLC podrá instalar en esta ubicación el sitio de instalación de servicio inalámbrico personal permitido. A continuación se adjunta una simulación fotográfica del sitio de instalación de servicios inalámbricos personales propuesto.

En conformidad con el Código de Obras Públicas de San Francisco § 1513, usted tiene 20 días a partir de la última fecha de este aviso o el matasellos para protestar contra la Solicitud.

Para enviar una protesta o comentarios sobre la Solicitud, visite el sitio web de Obras Públicas en bsm.sfdpw.org, haga clic en "Comentar sobre el permiso" y escriba "18WR-0033 ", o envíe a la siguiente dirección:

San Francisco Public Works
Bureau of Street-use and Mapping
1155 Market Street
San Francisco, CA 94103
A la atención de: Protestas de permisos inalámbricos

Si se presenta una protesta oportuna, Obras Públicas llevará a cabo una audiencia pública para determinar si otorgar la Solicitud. Obras Públicas le notificará posteriormente a la fecha y hora de la audiencia.

La protesta debe basarse en uno o más de los siguientes motivos:

1. El Departamento de Salud Pública determinó incorrectamente que la Solicitud cumple con el Estándar de Cumplimiento de Salud Pública (vea el Código de Obras Públicas, § 1507).

2. El Departamento de Planificación determinó incorrectamente que la Solicitud cumple con el Estándar de Compatibilidad aplicable (vea el Código de Obras Públicas, § 1509).

3. La Solicitud no cumple con ningún otro requisito para obtener un Permiso de sitio de instalación de servicio inalámbrico personal.

4. El Solicitante tiene la intención de modificar el sitio de instalación de servicio inalámbrico personal después de la emisión del Permiso de una manera que no cumple con el Estándar de Compatibilidad aplicable.

Si la ubicación propuesta para el sitio de instalación de servicios inalámbricos personales se encuentra en un distrito de zonificación comercial residencial o de barrio, su protesta puede incluir un reclamo que indique que el sitio de instalación de servicios inalámbricos personales propuesto obstruye las vistas o bloquea la luz en alguna ventana residencial adyacente. (Consulte el Código de Obras Públicas, § 1509(b)(2)). Si su protesta contiene tal reclamo,

incluya con su protesta fotografías de la posible obstrucción de las vistas o el bloqueo de la luz en sus ventanas para que el Departamento de Planificación y/o el funcionario de audiencias puedan evaluar este aspecto de su protesta. El Departamento de Planificación puede contactarlo para solicitar permiso a fin de ingresar a su residencia para investigar su reclamo. Si el Departamento de Planificación o el funcionario de audiencias están de acuerdo con sus inquietudes, la Ciudad puede agregar ciertas condiciones a la aprobación de la Solicitud para paliar esas inquietudes.

El Solicitante no sabe en este momento si presentará una Solicitud de permiso para modificar el sitio de instalación de servicio inalámbrico personal propuesto en algún momento durante el plazo del Permiso de sitio de instalación de servicio inalámbrico personal.

Para recibir correspondencia de Obras Públicas, del Solicitante y de otras partes interesadas, incluya con su protesta toda la siguiente información: dirección postal, número de teléfono diurno y dirección de correo electrónico (si está disponible).

Para obtener información y documentos adicionales sobre la Solicitud, puede contactarse con James Singleton de Mobilitie al 650-814-0564 o a JSingleton@mobilitie.com. También puede comunicarse con Obras Públicas de San Francisco al (415) 554-5343.

Para obtener más información general sobre los sitios de instalación de servicio inalámbrico personal, también puede visitar www.sf-planning.org/wireless.

Programa inalámbrico de Obras Públicas

CONDICIONES DEL PERMISO

La aprobación del Permiso de sitio de instalación de servicio inalámbrico personal propuesto ha sido recomendada por Obras Públicas de San Francisco (Oficina de Uso y Mapeo de Calles), Departamento de Salud Pública de San Francisco, Departamento de Planificación de San Francisco.

La aprobación tentativa incluye las siguientes condiciones que han sido aceptadas por el Solicitante:

Condiciones de Obras Públicas de San Francisco:

1. Esta recomendación no se basa en ninguna variación de los dibujos representados y/o la simulación fotográfica; si una variación es diferente, se requiere una nueva presentación. En caso de que la instalación varíe con respecto a dichas condiciones, debe volver a enviarse al/los Departamentos para su posterior revisión y comentarios.
2. Nuevos postes: no se deben erigir nuevos postes ni colocarlos en distritos subterráneos.
3. Tirantes: Siga todos los códigos de excavación para obtener los permisos necesarios para la colocación de tirantes. Los tirantes evitarán cruzar áreas conflictivas, como entradas de vehículos, rampas de acera.
4. Cumplir con los requisitos del código ADA para las leyes federales, estatales y locales. Asegurarse de que la ruta de ancho libre mínimo requerido para la ruta de acceso sea de cuatro pies.
5. Al finalizar la obra, proporcionar un conjunto de fotos de la construcción terminada del sitio de instalación a la Oficina de Permisos de Uso y Mapeo de Calles.
6. Mantener una certificación válida de seguro anualmente y reenviar una copia a la Oficina de Permisos de Uso y Mapeo de Calles.

Condiciones del Departamento de Salud Pública de San Francisco:

- Asegúrese de que cualquier equipo asociado con la instalación de esta antena no produzca un ruido superior a 45 dBA medidos a tres (3) pies de la fachada del edificio residencial más cercano.

- Asegúrese de que no haya áreas ocupadas públicamente a dos y medio (2,50) pies de la cara de la antena.

- Una vez instalada la antena, Mobilitie debe tomar mediciones de densidad de potencia de RF con la antena operando a plena potencia para verificar el nivel reportado en el informe de Hammett y Edison y para garantizar que el nivel de exposición pública de la FCC no se exceda en ningún área públicamente accesible. Esta medición debe tomarse nuevamente al momento de la renovación del permiso.

- Mobilitie debe ser consciente de que el público en general puede tener dudas sobre la antena y la posible fuente de RF cerca de sus viviendas. Mobilitie debe tener un procedimiento para tomar los niveles de densidad de potencia de RF en las viviendas cercanas cuando así lo soliciten los miembros del público en general.

- De conformidad con el Código de Obras Públicas de San Francisco, art. 25, Sec. 1527 (a)(2)(C), Mobilitie es responsable de pagar una tarifa de $210,00 al Departamento de Salud Pública de San Francisco para esta revisión.

Tenga en cuenta que esta aprobación y todas las condiciones se aplican solo al equipo y la instalación tal como se describe. Si se realizan cambios en el equipo o hay un aumento en la potencia radiada efectiva descrita anteriormente, se debe realizar una nueva revisión por parte del Departamento de Salud Pública.

Condiciones del Departamento de Planificación de San Francisco:

1. Plante y mantenga un árbol callejero apropiado.
2. No se puede usar ningún medidor expuesto, bandeja de medición o pedestal de medidor.
3. La antena y todo el equipo (conducto externo, unidades de relé de radio, anteojeras utilizadas para proteger los pernos del soporte [si es necesario] y mecanismos de montaje), excepto la señalización, si se usa para el cribado, se pintarán para que coincidan con el poste y se repintarán según sea necesario.
4. El cableado debajo de las unidades de relé de radio debe ingresar al poste con un espacio de no más de cinco pulgadas entre la parte inferior de cada unidad de relé de radio y la parte inferior del orificio de entrada correspondiente en el poste. La conexión del conducto en los puntos de entrada del poste deberá utilizar los tamaños de conexión más pequeños disponibles. Los compuestos de sellado, si se utilizan, deben estar ordenados, sin exceso de burbujas, y pintados a tono con el poste.
5. Retire la señalización del equipo elevado (incluido el rellenado de las marcas del logotipo del fabricante en las unidades/armarios de relé de radio) y las calcomanías de los equipos que puedan verse desde la acera y las viviendas, a menos que lo exija la normativa gubernamental.

6. Utilice la señalización de advertencia de RF más pequeña permitida (4 x 6 pulgadas); y coloque la pegatina de advertencia mirando hacia la calle, en un lugar lo más cercano posible a la antena. La pegatina estará orientada en sentido contrario a la calle, cuando no esté orientada frente a una ventana a 15 pies o menos de distancia. El color de fondo de la pegatina debe coincidir con la superficie de montaje del poste; y el logo y el texto deben ser blancos.
7. Apile los recintos de los equipos (sin incluir la antena) lo más cerca que permita la normativa aplicable y los estándares del equipo del fabricante.
8. Las costuras y pernos/tornillos en el área de montaje de la antena y la cubierta se deben fabricar e instalar de manera tal que reduzca su visibilidad (por ejemplo, tornillos de montaje a ras) desde el nivel de la acera.
9. No utilice luces indicadoras intermitentes visibles o similares.
10. No obstruya la vista desde, ni la luz en ninguna ventana residencial adyacente.
11. Las nuevas excavaciones de cubierta subterránea (bóveda), si se utilizan, no deberán dañar ni eliminar los bordillos de granito. No se generarán espacios significativos entre la tapa de la caja de la bóveda y el material de la acera principal debido a la instalación. Cualquier otro elemento arquitectónico histórico existente dentro del derecho de paso público deberá conservarse y protegerse durante la instalación. No se puede colocar el logotipo o nombre del transportista en la tapa de la bóveda.
12. Los elementos de la unidad de relé de radio no esenciales (asa y patas) deben quitarse.
13. El instalador hará los arreglos necesarios para que el personal del Departamento de Planificación revise la instalación inicial, a fin de garantizar el cumplimiento de las condiciones antes mencionadas (sin perjuicio de las inspecciones del propietario del poste y del Departamento de Obras Públicas).
14. Asegúrese de que los puntos de acceso wifi y el cableado asociado, utilizados por el Departamento de Tecnología de la ciudad, no sufran daños durante la instalación (si están presentes).
15. En caso de que la instalación varíe con respecto a dichas condiciones, la solicitud se volverá a enviar al Departamento de Planificación para su posterior revisión y comentarios.

PAUNAWA SA PANSAMANTALANG PAG-APRUBA NG APLIKASYON PARA SA PERSONAL WIRELESS SERVICE FACILITY SITE PERMIT

Mark Farrell
Mayor

Mohammed Nuru
Director

Jerry Sanguinetti
Manager

Street Use and Mapping
1155 Market St., 3rd floor
San Francisco, CA 94103
tel 415-554-5810

sfpublicworks.org
facebook.com/sfpublicworks
twitter.com/sfpublicworks

5/25/2018

Pansamantalang inaprubahan ng Public Works ang Aplikasyon Blg. 18WR-0033 na isinumite ng Mobilitie, LLC para sa isang Personal Wireless Service Facility Site Permit sa paligid ng 1509 Shrader St. Ang pag-apruba ay naglalaman ng ilang mga kondisyon na nakalakip sa liham na ito. Ang mga kondisyong ito ay maaaring mabago bago ang pagpapalabas ng Personal Wireless Service Facility Site Permit sa lugar na ito.

Ang kagamitan na mai-install sa lugar na ito ay kinabibilangan ng: Isang (1) antenna na naka-mount sa tuktok ng poste, isang (1) bakod ng kagamitan na nakakabit sa tagiliran ng poste kung saan nakalagay ang UE Relay at radyo.

Kung maaaprubahan, maaaring i-install ng Mobilitie, LLC ang pinahihintulutang Personal Wireless Service Facility sa lokasyong ito. Isang litratong simulation ng ipinapanukalang Personal Wireless Service Facility ang nakalakip dito.

Alinsunod sa San Francisco Public Works Code § 1513, mayroon kang 20 araw mula sa mas nahuhuli sa petsa sa paunawang ito o ang marka sa koreo upang iprotesta ang Aplikasyon.

Upang magsumite ng isang protesta sa/o mga komento sa Aplikasyon, mangyaring bisitahin ang website ng Public Works sa sumusunod na address: bsm.sfdpw.org at i-klik ang "Magkomento sa Permit" at ipasok ang "18WR-0033 " o ipadala sa sumusunod na address:

San Francisco Public Works
Bureau of Street-use and Mapping
1155 Market Street
San Francisco, CA 94103
Attn: Wireless Permit Protests

Kung may isusumiteng protesta sa takdang panahon, magdaraos ang Public Works ng pampublikong pagdinig upang magpasya kung aaprubahan ang Aplikasyon. Aabisuhan ka ng Public Works sa ibang araw tungkol sa petsa at oras para sa pagdinig.

Ang protesta ay kailangang batay sa isa o higit pa sa mga sumusunod na dahilan:

1. Mali ang pagpapasiya ng Kagawaran ng Pampublikong Kalusugan na ang Aplikasyon ay sumusunod sa Pamantayan sa Pagsunod sa Pampublikong Kalusugan (tingnan ang Public Works Code § 1507).

2. Mali ang pagpapasiya ng Kagawaran ng Pagpaplano na ang Aplikasyon ay tumutugon sa naaangkop na Pamantayan ng Pagkakabagay (tingnan ang Public Works Code § 1509).

3. Ang Aplikasyon ay hindi sumusunod sa anumang iba pang kinakailangan para sa pagkuha ng isang Personal Wireless Service Facility Site Permit.

4. Binabalak baguhin ng aplikante ang Personal Wireless Service Facility pagkatapos na maibigay ang Permit sa paraang hindi tumutupad sa naaangkop na Pamantayan ng Pagkakabagay.

Kung ang ipinapanukalang lokasyon para sa Personal Wireless Service Facility ay nasa isang zoning district na pangresidensya o pangkomersyo sa kapitbahayan, maaaring isama sa iyong protesta ang claim na ang iminumungkahing Personal Wireless Service Facility ay makakaharang ng tanawin mula sa o ng liwanag papunta

sa anumang katabing mga bintana ng tirahan. (Tingnan ang Public Works Code § 1509(b)(2).) Kung naglalaman ang iyong protesta ng ganoong claim, pakisama sa iyong protesta ang mga litrato na naglalarawan sa mga posibleng makakaharang ng mga tanawin mula sa o liwanag sa iyong mga bintana upang mapag-aralan ng Kagawaran ng Pagpaplano at/o opisyal ng pagdinig ang aspetong ito ng iyong protesta. Maaaring makipag-ugnayan sa iyo ang Kagawaran ng Pagpaplano upang humingi ng pahintulot na pumasok sa iyong tirahan para siyasatin ang iyong claim. Kung sumasang-ayon ang Kagawaran ng Pagpaplano o opisyal ng pagdinig sa iyong mga ipinag-aalala, maaaring magdagdag ang Lungsod ng ilang mga kondisyon sa pag-apruba nito sa Aplikasyon upang mapagaan ang mga pag-aalalang iyon.

Hindi alam ng Aplikante sa oras na ito kung ito ay maghahain ng isang Aplikasyon para sa isang permit na baguhin ang ipinapanukalang Personal Wireless Service Facility sa anumang oras sa panahon ng termino ng Personal Wireless Service Facility Site Permit.

Upang makatanggap ng mga liham mula sa Public Works, Aplikante, at iba pang mga interesadong partido mangyaring isama sa iyong protesta ang lahat ng sumusunod na impormasyon: Address ng kalye, numero ng telepono sa araw, at email address (kung mayroon).

Upang makakuha ng karagdagang impormasyon at mga dokumento tungkol sa Aplikasyon, maaari kang makipag-ugnay kay James Singleton ng Mobilitie sa 650-814-0564 o JSingleton@mobilitie.com . Maaari mo ring kontakin ang SF Public Works sa (415) 554-5343.

Para sa higit pang impormasyon tungkol sa Personal Wireless Service Facilities sa kalahatan maaari mo ring bisitahin ang www.sf-planning.org/wireless.

Public Works Wireless Program

MGA KONDISYON NG PERMIT

Inirerekomenda ng San Francisco Public Works (Bureau of Street-Use and Mapping), San Francisco Department of Public Health, San Francisco Planning Department ang pag-apruba sa ipinapanukalang Personal Wireless Service Facility Site Permit.

Kasama sa pansamantalang pag-apruba ang sumusunod na (mga) kondisyon na tinanggap ng Aplikante:

Mga Kondisyon ng San Francisco Public Works:

1. Ang rekomendasyong ito ay batay sa kondisyong walang kaibhan (variation) mula sa mga ipinakitang guhit at/o litratong simulation; kung ang isang kaibhan ay naiiba kinakailangan ang muling pagsusumite. Kung iba ang pag-install mula sa mga naturang kondisyon, dapat itong muling isumite sa (mga) Kagawaran para sa karagdagang pagsusuri at komento
2. Mga Bagong Poste: walang bagong poste ang itatayo o ilalagay sa mga distritong nasa ilalim ng lupa.
3. Down Guys: Sundin ang lahat ng code sa paghuhukay upang makuha ang mga kinakailangang permit para sa paglalagay ng down guys. Dapat iwasang tawirin ng down guys ang magkakasalungat na lugar ngunit hindi limitado sa mga daanan ng sasakyan, mga rampa ng kurbada.
4. Sumunod sa mga kinakailangan ng ADA code para sa Federal, Estado, mga lokal na batas. Tiyakin na ang daan ng pinakamababang kinakailangang lapad ng espasyo para sa daraanan ay apat na talampakan.
5. Sa pagtatapos ng trabaho, magbigay ng isang grupo ng mga litrato ng naitayo nang installation sa Bureau Street Use & Mapping Permit Office.
6. Panatilihin ang isang balidong sertipikasyon ng seguro taun-taon at magsumite ng isang kopya sa Bureau Street Use & Mapping Permit Office.

Mga Kondisyon ng Kagawaran ng Pampublikong Kalusugan ng San Francisco:

- Tiyakin na ang anumang mga kagamitan na nauugnay sa pag-install ng poste ng antenna na ito ay hindi gumagawa ng ingay na lampas sa 45 dBA na nasusukat sa tatlong (3) talampakan mula sa pinakamalapit na harapan ng gusaling tirahan.

- Tiyakin na walang mga lugar na okupado ng publiko sa loob ng dalawa at kalahating (2.50) talampakan mula sa mukha ng antenna.

- Sa sandaling ma-install na ang antenna, kailangang sukatin ng Mobilitie ang RF power density habang gumagana ang antenna sa sukdulang lakas upang beripikahin ang antas na iniulat sa Hammett and Edison report at upang matiyak na ang antas ng pagkakalantad ng publiko ayon sa FCC ay hindi nalalampasan sa anumang lugar na naa-access ng publiko. Ang pagsukat na ito ay kailangang gawin muli sa panahon ng pag-renew ng permit.

- Dapat malaman ng Mobilitie na maaaring may mga ipinag-aalala ang kalahatang publiko tungkol sa antenna at posibleng pagmumulan ng RF na malapit sa kanilang mga tirahan. Dapat ay may pamamaraan ang Mobilitie sa pagkuha ng mga antas ng density ng lakas ng RF sa mga kalapit na tirahan kapag hiniling ng mga miyembro ng kalahatang publiko.

- Alinsunod sa San Francisco Public Works Code, Art. 25, Sec. 1527 (a)(2)(C) ang Mobilitie ay may pananagutang magbayad ng $ 210.00 sa Kagawaran ng Pampublikong Kalusugan ng San Francisco para sa pagsusuring ito.

Mangyaring tandaan na ang pag-aprubang ito at anumang mga kondisyon ay nalalapat lamang sa kagamitan at installation tulad ng inilarawan. Kung may gagawing anumang mga pagbabago sa kagamitan o anumang pagtaas sa epektibong radiated power na

inilarawan sa itaas, isang bagong pagsusuri ng Kagawaran ng Pampublikong Kalusugan ang kailangang isagawa.

Mga Kondisyon ng Kagawaran ng Pagpaplano ng San Francisco:

1. Magtanim at magpanatili ang naaangkop na puno sa kalye.
2. Walang nakalantad na meter, meter pan o meter pedestal ang maaaring gamitin.
3. Ang antenna, at lahat ng mga kagamitan (panlabas na tubo, mga relay unit ng radyo, mga blinder na ginamit upang balutin ang mga bracket bolt [kung kinakailangan], at mga mekanismo ng pag-mount); maliban sa signage, kung gagamitin para sa screening, ay pipinturahan lahat upang tumugma sa poste at muling pipinturahan kung kinakailangan.
4. Ang kable sa ilalim ng mga relay unit ng radyo ay dapat pumasok sa poste nang hindi hihigit sa limang-pulgada ang puwang sa pagitan ng ilalim ng bawat relay unit ng radyo at sa ilalim ng kaukulang butas ng pagpasok sa poste. Ang koneksyon sa tubo sa mga entry point ng poste ay dapat gumamit ng pinakamaliit na sukat na makukuha. Ang mga sealing compound, kung ginagamit, ay dapat malinis na walang labis na bulubok at pininturahan upang tumugma sa poste.
5. Alisin ang nakaangat na signage ng kagamitan (kabilang ang mga nakabaon na marka ng logo ng tagagawa sa mga relay unit/cabinet ng radio) at equipment decal na maaaring nakikita mula sa bangketa at tirahan, maliban kung ipinag-uutos ng regulasyon ng pamahalaan.
6. Gamitin ang pinakamaliit na RF warning signage na pinapayagan (4 x 6 na pulgada); at ilagay ang sticker ng babala na nakaharap sa kalye, sa isang lokasyong pinakamalapit sa antenna hanggat maaari. Dapat nakaturo ang sticker palayo sa kalye, kapag hindi nakaharap sa isang kalapit na bintana sa loob ng 15 talampakan. Ang kulay ng background ng sticker ay dapat tumugma sa ibabaw kung saan naka-mount ang poste; at ang logo at teksto ay dapat na puti.
7. Itabi ang mga bakod ng kagamitan (hindi kasama ang antenna) sa pinakamalapit na pinahihintulutan ng mga naaangkop na regulasyon at mga pamantayan sa kagamitan ng tagagawa.
8. Ang mga gilid at bolt/screw sa antenna at shroud assembly area ay dapat na gawin at mai-install sa paraang hindi gaanong nakikita ang mga ito (hal. flush mounting screws) mula sa bangketa.
9. Huwag gumamit ng anumang nakikitang mga ilaw na kumikislap-kislap o katulad nito.
10. Huwag harangan ang tanawin mula sa, o ang ilaw sa katabing bintana ng tirahan.
11. Kung gagamit ng bagong mga paghukay ng bakod (vault) sa ilalim ng lupa, hindi dapat ito makapinsala o magtanggal ng mga granite sa kurbada. Walang malalaking puwang ang dapat na malikha sa pagitan ng vault enclosure lid at materyal ng pangunahing bangketa sanhi ng pag-install. Ang anumang iba pang mga kasalukuyang makasaysayang elemento ng arkitektura sa loob ng pampublikong karapatan sa daan ay mananatili at poprotektahan sa panahon ng pag-install. Walang logo ng carrier o pangalan ng carrier ang maaaring ilagay sa takip ng vault.
12. Ang mga hindi kinakailangang elemento ng relay unit ng radyo (hawakan at binti) ay aalisin.
13. Dapat asikasuhin ng taga-install na masuri ng tauhan ng Kagawaran ng Pagpaplano ang paunang pag-install, upang masigurong sinusunod ang mga naunang nabanggit na kondisyon (sa kabila ng mga pag-iinspeksyon ng may-ari ng poste at Department of Public Works).
14. Tiyakin na ang Mga Wi-Fi Access Point at kaugnay na mga kable, na ginagamit ng Kagawaran ng Teknolohiya ng Lunsod, ay hindi napinsala sa panahon ng pag-install (kung mayroon).
15. Kung naiiba ang pag-install mula sa mga nasabing kondisyon, ang aplikasyon ay dapat muling isumite sa Kagawaran ng Pagpaplano para sa karagdagang pagsusuri at komento.

STATE OF CALIFORNIA)
) ss.
COUNTY OF SAN FRANCISCO)

DECLARATION OF POSTING RE: POSTING OF NOTICE OF TENTATIVE APPROVAL OF APPLICATION FOR A PERSONAL WIRELESS SERVICE FACILITY SITE PERMIT

I, [James Singleton] do hereby declare as follows:

1. I am a Permitting Manager at Mobilitie LLC. I am over 18 years of age and I am a resident of Marin County, State of California.

2. On [5/30/2018] Mobilitie LLC. caused to be posted a copy of the "Tentative Approval of Personal Wireless Service Facility Site Permit" for Permit [18WR-0033] to streetlight poles located along the block face upon which the Personal Wireless Service Facility is located. Location posted in compliance with Public Works Code 1512(b)(2).

I declare under penalty of perjury under the laws of the State of California that the foregoing is true and correct.

Executed 5/30/2018 at County of San Francisco, California.

By: James Singleton

_[James Singleton]_____

18WR-0033
1509 Shrader St


Notice Posted
Notice Posted

NOTICE OF TENTATIVE APPROVAL OF APPLICATION
PERSONAL WIRELESS SERVICE FACILITY SITE PER

Posted 5/30/18

NOTICE OF TENTATIVE APPROVAL OF APPLICATION FOR
PERSONAL WIRELESS SERVICE FACILITY SITE PLAN

Posted: 5

Exhibit F: Public Works Order No: 188346

City and County of San Francisco

London N. Breed, Mayor
Mohammed Nuru, Director

San Francisco Public Works
Office of the Deputy Director & City Engineer, John Thomas
Bureau of Street-Use & Mapping
1155 Market Street, 3rd Floor
San Francisco Ca 94103
(415) 554-5810 www.SFPublicWorks.org

Jerry Sanguinetti, Bureau Manager

Public Works Order No: 188346

DIRECTOR'S DECISION REGARDING PERSONAL WIRELESS SERVICE FACILITY PERMITS

Permit #	Company	Address
17WR-0306	ExteNet Systems, Inc.	184 FRANCISCO ST
18WR-0033	Mobilitie, LLC	1509 SHRADER ST
18WR-0060	AT&T Mobility	1178 CLAYTON ST

BACKGROUND:

1. ExteNet Systems, Inc., Mobilitie, LLC, and AT&T Mobility filed the above applications with San Francisco Public Works for the installation of Personal Wireless Service Facilities.

2. ExteNet Systems, Inc., Mobilitie, LLC, and AT&T Mobility mailed Tentative Approval notices to residents and property owners within 150-ft. and to neighborhood associations within 300-ft. of the subject locations.
   a. For application 17WR-0306, ExteNet Systems, Inc. mailed notices on 5/25/2018.
   b. For application 18WR-0033, Mobilitie, LLC mailed notices on 5/30/2018.
   c. For application 18WR-0060, AT&T Mobility mailed notices on 6/1/2018.

3. Objections were received within the protest periods and a public hearing was subsequently scheduled on July 9, 2018 to consider the applications.

4. Hearing Officer Jumoke Akin-Taylor conducted the July 9, 2018 public hearing.

5. At this hearing, Public Works staff provided an overview regarding the permitting of Personal Wireless Service Facilities. Staff also stated that these applications had been

reviewed by Public Works, the Planning Department, and the Department of Public Health and were found to have met the compliance and compatibility standards of Public Works Code Article 25.

RECOMMENDATION:

Public Works should approve all 3 permits.

FINDINGS:

1. 17WR-0306:
   a. The concerns raised for this application involved the obstruction of view and potential health issues related to the proposed radio frequencies emitted by the Personal Wireless Service Facility. The applicant responded to the protesters to address their concern. DPH and test reports from Hammett & Edison, Inc. (consultant to applicant) determined that the frequencies emitted by the facility meet the FCC emission standards. Planning also responded saying that the proposed side mounted equipment does not exceed the recommended dimensions for low-profile equipment, and would not result in substantial impairment, or block light into a residential window. Planning also said the proposed wireless facility would satisfy the compatibility standards for a Tier B Personal Wireless Service Facility Site Permit.

2. 18WR-0033:

   a. The protester's concern raised for this application were centered on obstruction of view and detract from the character of the neighborhood. The protesters also outlined concerns about the potential health risks related to radio frequency emissions of the Personal Wireless Service Facility. The applicant responded to the protesters. Planning Department also reviewed the area and determined that the proposed wireless facility would not substantially obstruct views from a window, or block light into a residential window. Planning Department determined that the proposed wireless facility would satisfy the compatibility standards for a Tier B Personal Wireless Service Facility Site Permit. DPH and test reports from Hammett & Edison, Inc. (consultant to applicant) determined that the frequencies emitted by the facility meet the FCC emission standards.

3. 18WR-0060:

   a. The protester outlined concerns about obstruction of views and noise emitted from the Personal Wireless Service Facility. The applicant responded to the protester. DPH and test reports from Hammett & Edison, Inc. (consultant to applicant) determined that the wireless facility meets the health compliance standards regarding noise. Planning determined that the proposed wireless facility would not substantially obstruct views from a window, or block light into a residential

window. Planning also determined that the proposed wireless facility would satisfy the compatibility standards for a Tier B Personal Wireless Service Facility Site Permit.

APPEAL PROCESS:

Public Works will now issue three Personal Wireless Service Facility Permits. Public Works will notify all persons who attended the Hearing, and any person requesting notice, that it has issued three Personal Wireless Service Facility Site Permits. Within fifteen (15) calendar days of Public Works' issuance of the Personal Wireless Service Facility Permits, any person may appeal the permits to the Board of Appeals. For further information regarding the appeal process, please contact the Board of Appeals in person at 1650 Mission Street, Suite 304, or call 415-575-6880.

9/12/2018

X

Sanguinetti, Jerry
Bureau Manager
Signed by: Sanguinetti, Jerry

9/12/2018

X

Thomas, John
Deputy Director and City Engineer
Signed by: Thomas, John

9/13/2018

X Mohammed Nuru

Nuru, Mohammed
Director, DPW
Signed by: Nuru, Mohammed

Exhibit G: Public Works Permit No. 18WR-0033

City and County of San Francisco
San Francisco Public Works · Bureau of Street Use and Mapping
1155 Market Street, 3rd Floor · San Francisco, CA 94103
sfpublicworks.org · tel 415-554-5810 · fax 415-554-6161

18WR-0033

Wireless Box Permit

Address : 1509 SHRADER ST **Cost: $1,979.00** **Block:1289 Lot: 003 Zip: 94117**

Mobilitie, LLC

Name: Mobilitie, LLC

MANDATORY COORDINATION WITH CONFLICTING PERMITS IS REQUIRED. PERMIT HOLDER SHALL NOT COMMENCE WORK WITHOUT FIRST PROPERLY COORDINATING WITH EXISTING PERMIT HOLDERS AS NOTED ON THE EXCEPTION PAGE(S) OF THIS PERMIT. IF THIS PERMIT CONFLICTS WITH A CITY PROJECT OR OTHER APPROVED PERMIT, THE PERMIT HOLDER OF THIS PERMIT SHALL BE RESPONSIBLE FOR THE PROPER COORDINATION AND EVALUATION OF THE SITE PRIOR TO COMMENCING WORK.

Conditions	
Contact247	Refer to Agent
Permit Comments	
Service Address	
Wireless Machine Type	
Wireless Tier	TierB
Permit Pole Location	1289003/Shrader_151
Permit Wireless Antenna	1
Permit Wireless AntMakeModel	Alpha Wireless - AW3477-S1-G
Permit Planning Location	
Permit Tier Comments	
Permit Wireless DPH	Applicant is using equipment for the first time. Attached is an original verified statement from a registered engineer that: (i) potential human exposure to radio frequency emissions from the proposed Personal Wireless Service Facility is within the FCC guidelines; and (ii) noise at any time of the day or night from the proposed Personal Wireless Service Facility is not greater than forty-five (45) dBA as measured at a distance three (3) feet from any residential building facade.
Permit Planning Approval	The proposed Personal Wireless Service Facility is in Zoning Protected Location.
Permit Utility Conditions	Applicant has a valid Utility Conditions Permit
Permit Tier3 Std	
Permit Tier3 Std1	
Permit Tier3 Std2	
Permit Wireless Documents	
Permit_Auto_StartDate_Ind	Y

The undersigned Permittee hereby agrees to comply with all requirements and conditions noted on this permit

Approved Date : 09/19/2018

Applicant/Permitee Date

Printed : 9/19/2018 4:19:43 PM Plan Checker Leoncio Palacios

Special Conditions

Conditions

San Francisco Public Works Conditions:
1. This recommendation is based on no variation from the depicted drawings and/or photo simulation; if a variation is different a re-submittal is required. Should the installation vary from said conditions, it should be resubmitted to Department(s) for further review and comment
2. New Poles: no new poles shall be erected or placed in underground districts.
3. Down Guys: Follow all excavation codes to obtain the necessary permits for placement of down guys. Down guy shall avoid crossing conflicting areas but not limited to driveways, curb ramps.
4. Comply with ADA code requirements for Federal, State, local laws. Make sure path of minimum required clear width for accessible path of travel is four feet.
5. At the conclusion of the work, provide a set of as built photos of the installation to the Bureau Street Use & Mapping Permit Office.
6. Maintain a valid certification of insurance annually and forward a copy to the Bureau Street Use & Mapping Permit Office.

San Francisco Department of Public Health Conditions:
1. Ensure that any equipment associated with the pole installation of this antenna does not produce a noise in excess of 45 dBA as measured at three (3) feet from the nearest residential building façade.
2. Ensure that there are no publicly occupied areas within two and a half (2.50) feet from the face of the antenna.
3. Once the antenna is installed, Mobilitie must take RF power density measurements with the antenna operating at full power to verify the level reported in the Hammett and Edison report and to ensure that the FCC public exposure level is not exceeded in any publicly accessible area. This measurement must be taken again at the time of the permit renewal.
4. Mobilitie should be aware that the general public may have concerns about the antenna and potential RF source near their dwellings. Mobilitie should have in place a procedure for taking RF power density levels in nearby dwellings when requested by the members of the general public.
5. In accordance with the San Francisco Public Works Code, Art. 25, Sec. 1527 (a)(2)(C) AT&T is responsible for paying a fee of $210.00 to the San Francisco Department of Public Health for this review.

Please note that this approval and any conditions apply only to the equipment and installation as described. If any changes in the equipment or any increase in the effective radiated power described above are made, a new review by the Department of Public Health must be conducted.

San Francisco Planning Department Conditions:
1. Plant and maintain an appropriate street tree.
2. No exposed meter, meter pan or meter pedestal may be used.
3. Antenna, and all equipment (external conduit, radio relay units, blinders used to shroud bracket bolts [if needed], and mounting mechanisms); except signage, if used for screening, shall all be painted to match the pole and repainted as needed.
4. Cabling below radio relay units shall enter the pole with no more than a five-inch gap between bottom of each radio relay unit and the bottom of the corresponding entry hole on the pole. Conduit connection at pole entry points shall utilize the smallest fitting sizes available. Sealing compounds, if utilized, shall be tidy without excess bubbling and painted to match pole.
5. Remove raised equipment signage (including filling in manufacturer logo indentations on radio relay units/cabinets) and equipment decals that may be visible from sidewalk and dwellings, unless required by government regulation.
6. Utilize smallest RF warning signage allowed (4 x 6 inches); and place the warning sticker facing out toward street, at a location as close to antenna as is feasible. Sticker shall face away from street, when not facing a nearby window within 15 feet. Background color of sticker shall match the pole-mounting surface; and logo and text shall be white.
7. Stack equipment enclosures (not including antenna) as close as allowed by applicable regulation and manufacturer equipment standards.
8. Seams and bolts/screws at antenna and shroud assembly area shall be fabricated and installed in a manner so as to reduce their visibility (e.g. flush mounting screws) from sidewalk level.
9. Not utilize any visible flashing indicator lights or similar.
10. Not obstruct the view from, or the light into any adjacent residential window.
11. New below ground enclosure excavations (vault), if utilized, shall not damage or remove granite curbs. No significant gaps shall be created between vault enclosure lid and primary sidewalk material due to installation. Any other existing historic architectural elements within the public right-of-way shall be retained and protected during installation. No carrier logo or carrier name may be placed on the vault lid.
12. Non-essential radio relay unit elements (handle and legs) shall be removed.
13. The installer shall arrange to have Planning Department staff review the initial installation, in order to ensure compliance with the aforementioned conditions (notwithstanding inspections by pole owner and Department of Public Works).
14. Ensure Wi-Fi Access Points and associated wiring, utilized by the City's Department of Technology, are not damaged during installation (if present).
15. Should the installation vary from said conditions, the application shall be resubmitted to the Planning Department for further review and comment.

Permit Addresses

18WR-0033

*RW = RockWheel, SMC = Surface Mounted Cabinets, S/W = Sidewalk Work, DB = Directional Boring, BP= Reinforced Concrete Bus Pad, UB = Reinforced Concrete for Utility Pull Boxes and Curb Ramps
Green background: Staging Only

Number of blocks: 1 Total repair size:0 sqft Total Streetspace:0 Total Sidewalk: sqft

ID	Street Name	From St	To St	Side	*Other	Asphalt	Concrete	Street Space Feet	Sidewalk Feet
1	SHRADER ST	17TH ST	CARMEL ST	West	RW : False SMC : False S/W Only : False DB: False BP: False UB: False	0	0	0	
	Total					0	0	0	

Exceptions

18WR-0033

Street Name	From St	To St	Message	Job	Contact	Phone
	17TH ST	CARMEL ST -	Conflict with existing Street Use Permit.	13MSE-0351	Refer to Agent - Refer to Agent	

No Diagram submitted

Exhibit H: Sedars' July 6, 2018 letter supplementing argument

Brian & Maggie Sedar
1509 Shrader St
San Francisco, CA 94117
daytime tel: (415) 533-2012
email: maggiegsedar@comcast.net

6 Jul 2018

San Francisco Public Works
Bureau of Street-Use and Mapping
1155 Market St, 3rd Floor
San Francisco, CA 94103

Attn: Wireless Facility Program - Comments Permit Application No. 18WR-0033

Dear City of San Francisco,

For the Public Hearing on 9 July 2018 (Public Works Order No. 187977), we respectfully provide below additional comments regarding the possibility of a Personal Wireless Service Facility (PWSF) antenna and equipment enclosure box being placed atop the street light pole quite close to and in direct line of view of the windows at our home at 1509 Shrader Street. These Comments supplement and do not replace our 14Jun2018 written Protest.

1. We have become aware of a number of irregularities in Mobilitie, LLC's notification process to nearby residents:

    a. not all Residents within 150 feet were notified. Residents at 1504/1506 Shrader Street, San Francisco, CA 94117, ie directly across the street, were unaware of the Wireless Service Facility being proposed. If they have not yet independently commented (eg Fladeland et al), they wish to Comment on that point.

    b. during our Open Letter / Signed Petition process (see 6Jul2018 Open Letter from 60 Neighbors of Upper Cole Valley and Concerned San Franciscans), virtually all neighborhood Residents were completely unaware of the very large, 35x15½x9-13½" Equipment Box that would be affixed at midpoint on the pole. They believed the Antenna in Mobilitie's proposed images --the single called-out (arrowed) item-- was the ONLY visual change residents were to review. "I thought this was all about just the little (actually not little, 5'4½" tall) thing on top" was a <u>common</u> reaction. The angle and coloration (and this is beyond their requirement to paint the pole/equipment) in the two images Mobilitie provided also served to diminish or hide the large Equipment Box. The Notice's photos and enhanced images are highly misleading and residents are upset about this (see Fig 1-5).

    c. we note there may be other omissions in the images, such as the Power Disconnect Box normally required by PG&E/other agencies as a worker and fire-safety measure, to be affixed at apprx 9' level. This did not appear in either image and the Disconnect Box is definitely big and deep enough (9.9x8.8x4½") for residents and pedestrians to notice, especially since it attaches just <1/3rd level up the pole.

d. our independent review of Mobilitie designs of this particular small cell configuration confirms these details (Fig 7), as well as the very large size of the Antenna (5'4½"H – taller than Maggie and our daughter, Fig 5), the additional disconnect box, and the deeper mounting bracket manufactured as part of the large Equipment box, as well as the depth of the stainless clamp ends, these both add 4½" depth not shown in the Proposal to / by Mobilitie (or the City).

e. Residents also noted a serious irregularity in the angle of the 2nd photo provided, which further deceived residents about the relative scale of, and what the Wireless Service Facility will actually look like to eye-level (rather than next-to-the-ground) viewers (see Fig 3 vs 4).

f. of great concern was the warning label (Fig 7) alerting short-stay pole workers of the risk of RF radiation "exceed(ing) the general public exposure limit", and the power disconnect switch associated to prevent that. This left residents a sense of "I guess we get told it's not dangerous and we're exposed to it 24/7, but the pros get to <u>see</u> that it's dangerous <u>and</u> shut it off before they even get <u>near</u> it".

g. the suggestion (penultimate paragraph in the Notice) to contact Mobilitie for information on their Application was welcome, however it seemed odd to refer SF residents to the Applicant (and not the City) for information on their tentative approval, and ESPECIALLY to refer residents to ask the *Applicant* for information on "the protest". Residents were upset by this as well. Mobilitie's was the only (information) email address provided during this period.

h. the Notice letter was dated 25May2018, but not received by residents until June and in letters that were not post-mark-dated. This made the Notice's timeframe "you have 20 days...to protest" even shorter.

i. finally, poor affixing of the Public Notice to the pole compounded the problem of many in the neighborhood unable to get any information on the proposal or the Notice as Mobilitie's info packet either fell off or was blown off (our street is quite windy).

In sum, the Notice itself left residents feeling under and short-noticed, under-informed, wondering who looks after their interest in the City's process, and upset.

2. The initial processing of our Protest continues this "irregular" trend and is a concern for ourselves and our neighborhood.

   a. the <u>very</u> limited, email distribution on 28Jun, "Public Hearing for Personal Wireless Service Facility Site Permit Application 18WR-0033", likely sent only to ourselves (no other residents knew of the Public Works Order), did not appear to make next Monday's Hearing seem very "Public" at all.

   b. the even-shorter, contained 10-day notice *until* the Hearing --effectively allowed <u>only 4 working days</u> to inform and position other/any concerned residents -- (this being the Fourth of July Week many folks are also travelling). The same too-short 4 work days period for "written comments" (and implying "day before" must mean a business, vs a

calendar day) also seemed too-short. Whether intentional by Mobilities and the City or the luck of the Calendar, the appearance was bad. It left us embarrassed, and our neighborhood quite upset, and starting to wonder if our rights to a reasonable and timely approval process may have been further compromised.

c. despite this very short timeframe, 60 adult residents in our neighborhood or concerned San Franciscans using our neighborhood, every available resident on our street (one house vacant; another family away), have signed an Open Letter asking the City of San Francisco to deny Mobilitie's Application #18WR-0033. Had we been allowed a reasonable time (> 4 days) before the Hearing, and not during a Holiday Week, we believe even more signatures would or will be added to the request to the City to deny Mobilitie's Application #18WR-0033.

3. The Planning Department email Response of 2Jul2018 to our 14Jun2018 (Sedar) Letter of Protest, "Planning Response to Protest of DPW Permit Application No. 18WR-0033" appears to contradict information in the 25May Notice Letter, and may appear to attempt to negate, overwrite or possibly even ignore next week's "Public Hearing" on this issue.

   a. the 25May Notice Letter states that "if the proposed location for the PWSF is in a residential...district, your protest may include a claim that the proposed PWFS obstructs the view from or blocks the light into any adjacent residential windows." The 2Jul Response *now* suggests that "the Planning Department shall <u>only</u> consider views of buildings, open spaces, natural vistas, or parks from the Public Rights-of-Ways". The Response also *now* suggests the "Planning Department shall not take into account views from private properties". Does this suggest the 1500 block of Shrader is no longer a residential district?

   b. the Response then suggests "Planning may only determine if a proposed facility will <u>significantly</u> obstruct views from <u>and</u>/or light into surrounding residential windows." The words "significantly" as well as the "and" condition, did not appear in the 25May Notice Letter. Has the baseline been changed again for residents protesting? (and post-the Protest period?) The Response starts off referring to our "opposition to the proposed small cell site". Please see in Fig 5 that the equipment in the proposed PWSF is NOT small. It is significantly large to be installed in this proximity to a young sleeping or studying resident. The 5'4½"x10¾" Antenna and effectively 35x15½x13½" Equipment Enclosure definitely obstructs the view and will block light to these residential windows, and their scale and proximity relative to how closely Mobilitie has proposed their site to an effectively 3-story residence (see Fig 6) makes these obstructions even more significant.

   c. the Response suggests the "proposed mounting of side-mounted, low-profile equipment enclosures" reduces the visual significance. Please note the Equipment Enclosure, even side-mounted, creates a 13½", not a "low-profile" 9-inch, visual and light blockage, when the factory-attached mounting bracket and stainless-steel end-clamps are correctly included in the view (see Fig 8). 13½" is almost the same as looking at this large 15½"W cabinet "head on"; plus, we must add in the tapered pole's width, apprx 7" at the 16'6" point elevation, so it actually totals up at 20½" wide -- hardly "low

profile", no matter how one spins it. It is best to refer to a detailed design (Figs 7-8), not Mobilitie's "simulated" images or their incomplete Notice.

d. the Response refers to this Application's "replacement concrete pole located adjacent to 1509 Shrader Street". Please note the streetlight at this location is definitely a steel pole. We hope "Planning has re-reviewed the application materials for Application 18WR-0033" as the Response indicates. A review should turn up incorrect information like the wrong type of pole as well as equipment depth and orientation. We hope this particular Application, also unwanted by residents on its street as well as a significant number of San Franciscans in or using the neighborhood, is reconsidered carefully – as carefully as we have reviewed the Notice and the views and objections of our neighbors.

e. of greatest concern, the Response closes suggesting that the Planning Department, after re-reviewing the Application has already made its determination, in *advance* of the 9Jul2018 Public Hearing *or receipt of written comments* by residents. We hope this was essentially just a perfunctory copy of Mobilitie's view (again the suggestion in item 1-g above that residents should ask Mobilitie the status on its Approval and even the protest, was troubling). Or that the Response was largely a recitation of Planning's initial view, and that it does not undermine, or suggest that we and other residents will not have the benefit of an *independent* Hearing Officer, who will consider *all* views, ie that there will hopefully be a fair Hearing next week.

Given the sheer number of irregularities in the Notice (1), the processing or our Protest (2) and possibly in a pre-determined "determination" (item 3), (and as may be evident from the information we are assembling), we may need to reserve our rights to both Appeal and even to review the full Application, Notice, Protest and Hearing processes for Application No. 18WR-003.

Given the limited time allowed for our initial Protest, we have become aware of a number of other concerns with this proposed PWSF that we will now Comment on:

4. <u>Reduced Property Value</u> it is implicit in our 18Jun2018 Protest when we say that our Upper Cole Valley buried-utilities street/neighborhood would suffer harm if such massive pole-borne equipment is approved, and <u>right</u> in front of our bay windows/bedrooms/studies and living rooms. This indeed "detract(s) from the streetscape-...that defines (this) individual neighborhood" and that would adversely affect our home's and other homes' value. Two SF-voter/Realtors we have worked with, including the one who helped us purchase the home in 1998 and knew of our strong desire to be on this street *because of its buried utilities* have confirmed that Bern Shen's 10% figure of diminished home value is not at all unreasonable and may possibly be low.

5. <u>Fire Risk</u> is a key concern. We have gotten some indication from our Cole Valley neighborhood association that Mobilitie and the other telecom site operators must only obtain a $1 million bond for fire damage resulting from one of their sites catching fire, with any other damage borne by the adjacent *homeowners*. The homes near this particular pole *far* exceed that $1 million bond value and we deserve to express our great concern on lack of fire liability thinking

or cover. Despite a metal (again, not concrete or wood) pole, high-voltage electrical and electronic equipment is all prone to fire. Just because there aren't that many PWSF sites yet, we can/must look to the larger cell site history and see a number of very dangerous and damaging fires (Google search cell site fires). Given PG&E's presumed continued role in these light poles, and the multi-billion dollar liability they have very recently incurred (which is only at the lowest evaluated figure) in the Northern California wildfires due to their equipment and maintenance neglect, we have heightened concern that this proposed Permit is under-considered and under-funded as to risk by Mobilitie, PG&E and the City. This proposed site assumes we will cover the greatest loss risk. These other parties must not assume that.

6. Revenue Drivers for the City hopefully do not undermine the rights of residents to good, fair process as well as their long-term health. This is a growing concern, the more we learn of the money involved for the City in this 5G buildout, and the more we see of apparently poor representation for the neighborhood residents. Again, we hope the City of San Francisco will pause and think carefully about Application No. 18WR-0033.

7. Differential Legislation and City of San Francisco Treatment We are quite concerned to learn of the health concerns of firefighters internationally, in California, and in San Francisco to proximity to PWSF sites. This Comment is to register that we now know, and do not understand why only these professionals have been listened to by state legislators. Further that the City of San Francisco will not subject its firehouses and firefighters to the same RF and EMF risks of a PWSF, that it is apparently willing to subject its residents to (in particular, our young daughter). We will seek out the advice of our SF firefighter neighbors on this issue and have already attempted to do so (see item below).

8. Poor Timing of Notice and Comments Period Because of the very poor timing of our allowed Protest and Comment period being right in the short Fourth of July week (one of their 2 busiest periods of the year) our SF firefighter neighbors were unable to meet with us or to consider signing the Open Letter. We reserve the right to consult with these professionals on a number of the issues affecting this particular Application, as well as San Francisco PWSF's in general. Similarly, our close-by neighborhood school, Grattan Elementary, is not in session. Nonetheless, we did consult with our Principal, Catherine Marie Walter, who has signed the Open Letter Protest (signature #40, p3) to request denial of Mobility Application No. 18WR-0033.

9. Experts Next Door. The next closest resident to the proposed site is an MD and his spouse is an RN/PhD. They have in a more qualified way articulated a number of our health concerns for long-term exposure, especially to our young daughter who likewise studies and sleeps 15-20ft immediately adjacent to the proposed equipment and its RF and EMF radiation. While we understand the very dated, non-medically ascertained guidelines of the FCC Communications Act, we are hopeful our City of San Francisco will exercise prudence in its own assessment of what it wants to permit this close to the residents it directly represents. Bern Shen and Ann Williamson's written comments to you and suggestions are very important Comments.

10. No value to residents despite the Carrier. We now understand Mobilitie nationally supports Sprint's PWSF buildout. Whether Verizon (item 6 in our 14Jun Protest), or Sprint, or TMobile, or even our AT&T Wireless provider, we see no direct value to this PWSF in front of our home – nor do the neighbors on our street.

Again, in sum, our Comment (in supplement to our 14Jun2018 Protest) is that we cannot allow/accept both the grant or any approval of Mobilitie's proposed Application for a Personal Wireless Service Facility Site Permit directly in front of our family home at 1509 Shrader Street, San Francisco, California 94117. We don't believe our mid-block, next-to-window lamp post on a view street with buried utilities should have been selected for all the reasons contained above and on 14Jun, and strongly supported by the 6Jul2018 Open Letter from 60 Neighbors of Upper Cole Valley and Concerned San Franciscans. While we have been quite busy rushing to Mobilitie's Application timeframe, we are already planning to share our deep community concern with our Supervisor for District 5, Mayor-elect London Breed.

We appreciate the City of San Francisco reconsidering its Tentative Approval of Application for a Personal Wireless Service Facility Site Permit directly in front of our home at 1509 Shrader Street. We hope for a fair and impartial Hearing on Monday, and to hear soon of the Permit's rejection.

Respectfully submitted,

Brian D Sedar

Maggie G Sedar

Attachment (Figs 1-8)

Fig 1 – Mobilitie Photo Deceptions

- Camera angle, color fade Equipment Box into house
- Equip Box not called out, lacks its mounting bracket
- Disconnect Switch also not shown
- Phototouch raises streetlight arch
- Painted <u>lens</u> of the LED luminaire

Fig 2 – LightPole at 1509 Shrader – Proposed Antenna & Deep Equip Box Obstructs View & Light

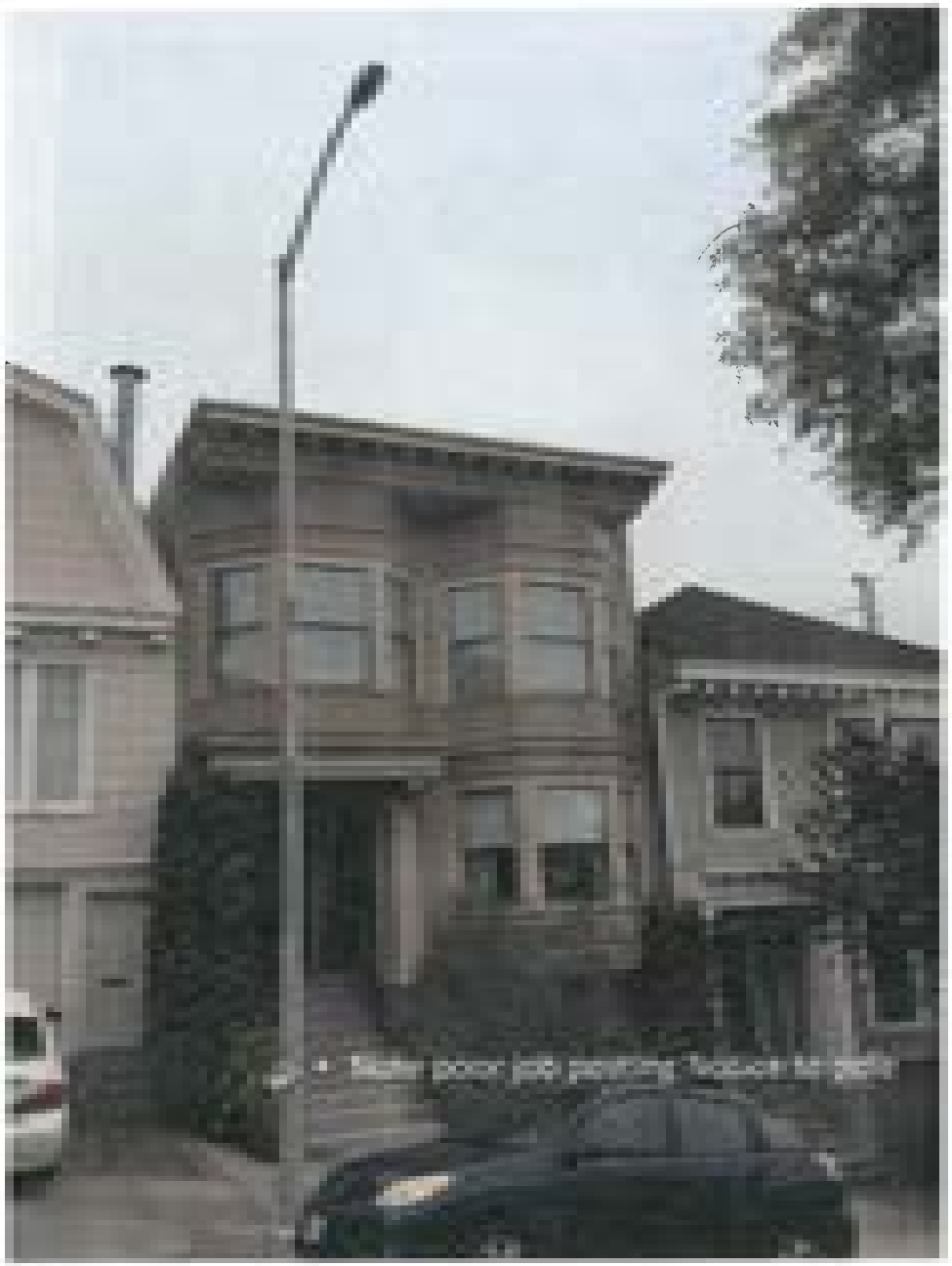

Fig 3 – Mobilitie Photo Deceptions

- Camera down next to street, see Fig 4
- Equip Box not called out
- Disconnect Switch also not shown

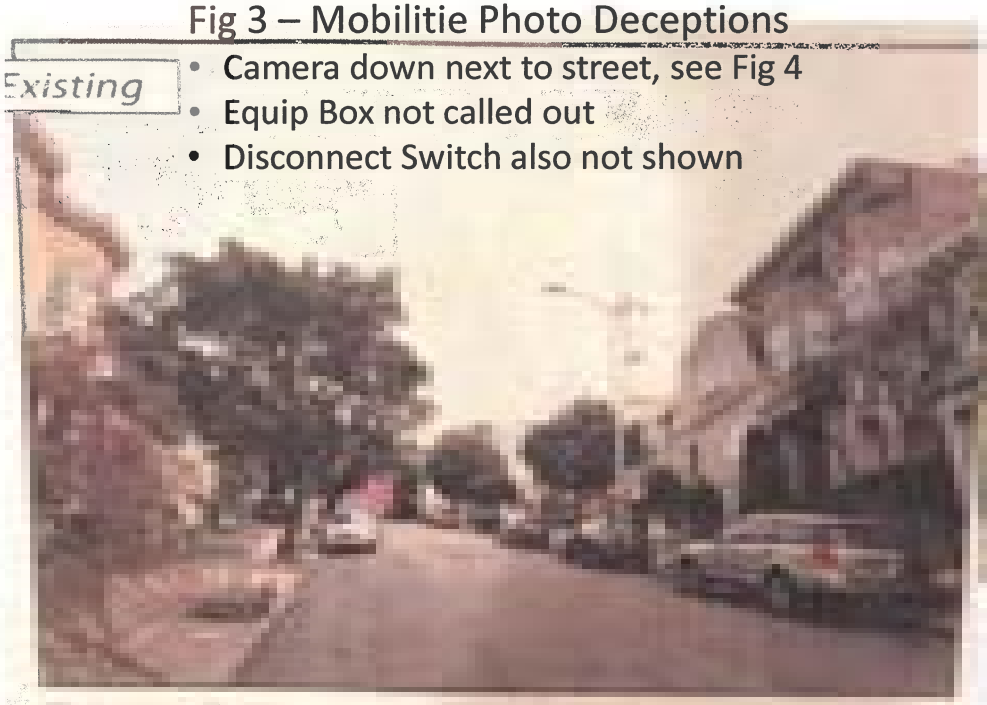

Streetlight Pole at 1509 Shrader
Proposed Antenna & Equip Box
Obstructs View and light

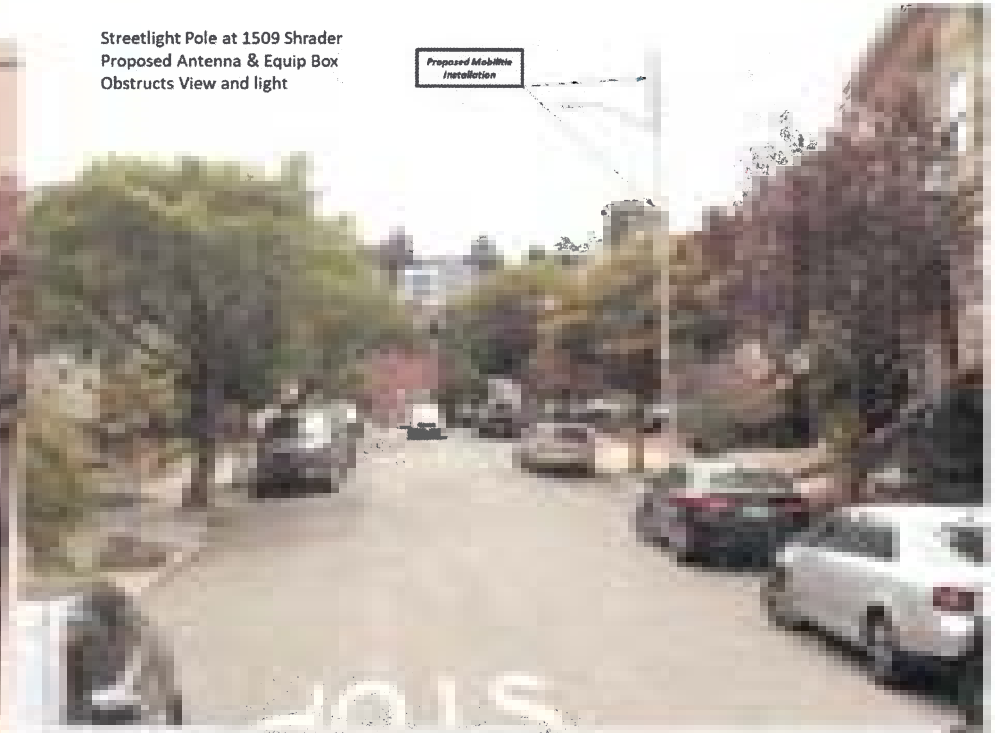

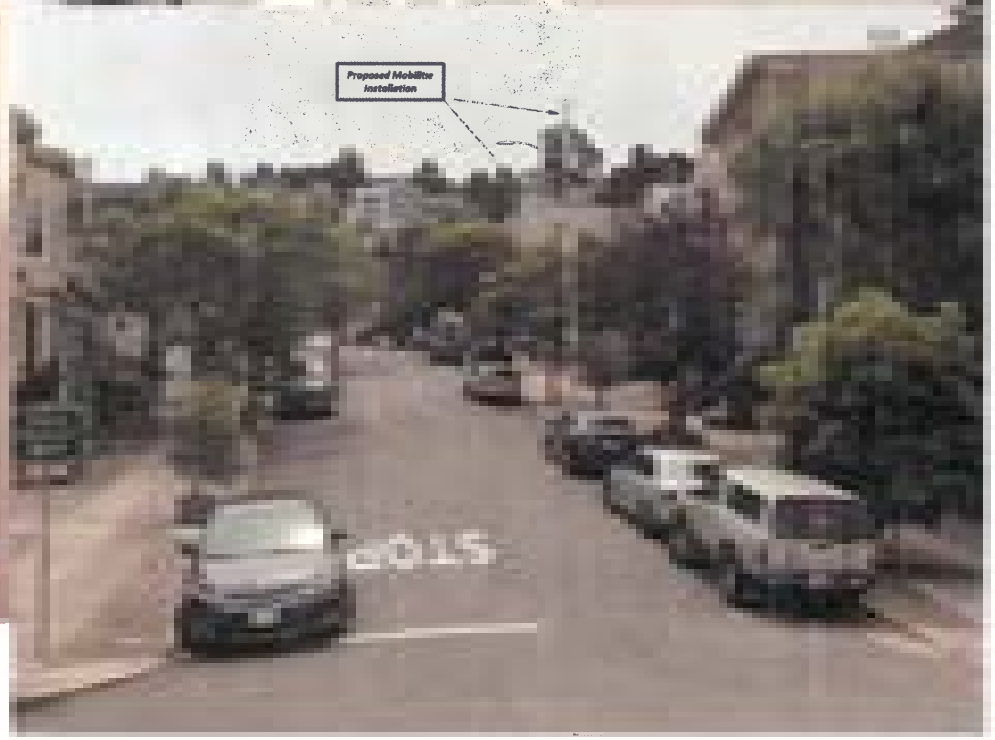

Fig 4 – Without Mobilitie Photo Deceptions

- Camera at natural, eye level
- Sutro Tower in fog, but far R of pole
- Equip Box called out
  Disconnect Switch shown

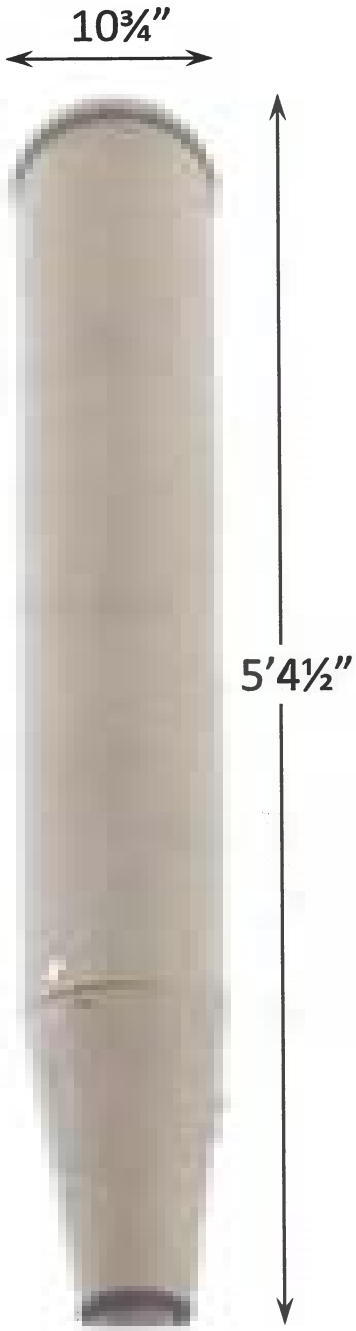

Fig 5 – “Small Cell Site” Equipment is Not Small

- comparison to young Resident sleeping 16’ away
- Mobilitie LLC notice photos did not call out Equipment Shroud or Power Cutoff Switch

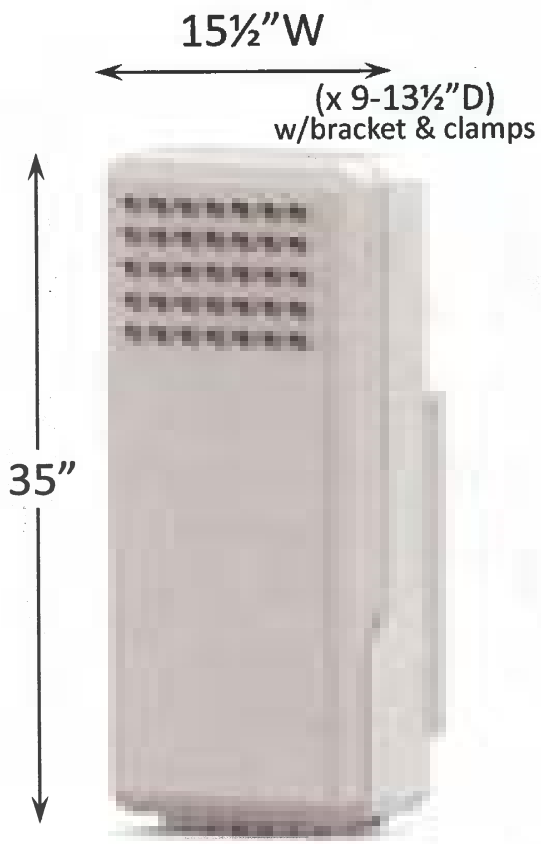

Fig 6 – Scaled Proximity: Resident to Proposed Antenna & Equipme
Disrupted Light & Views, Very Close to RF/EMF Radiation

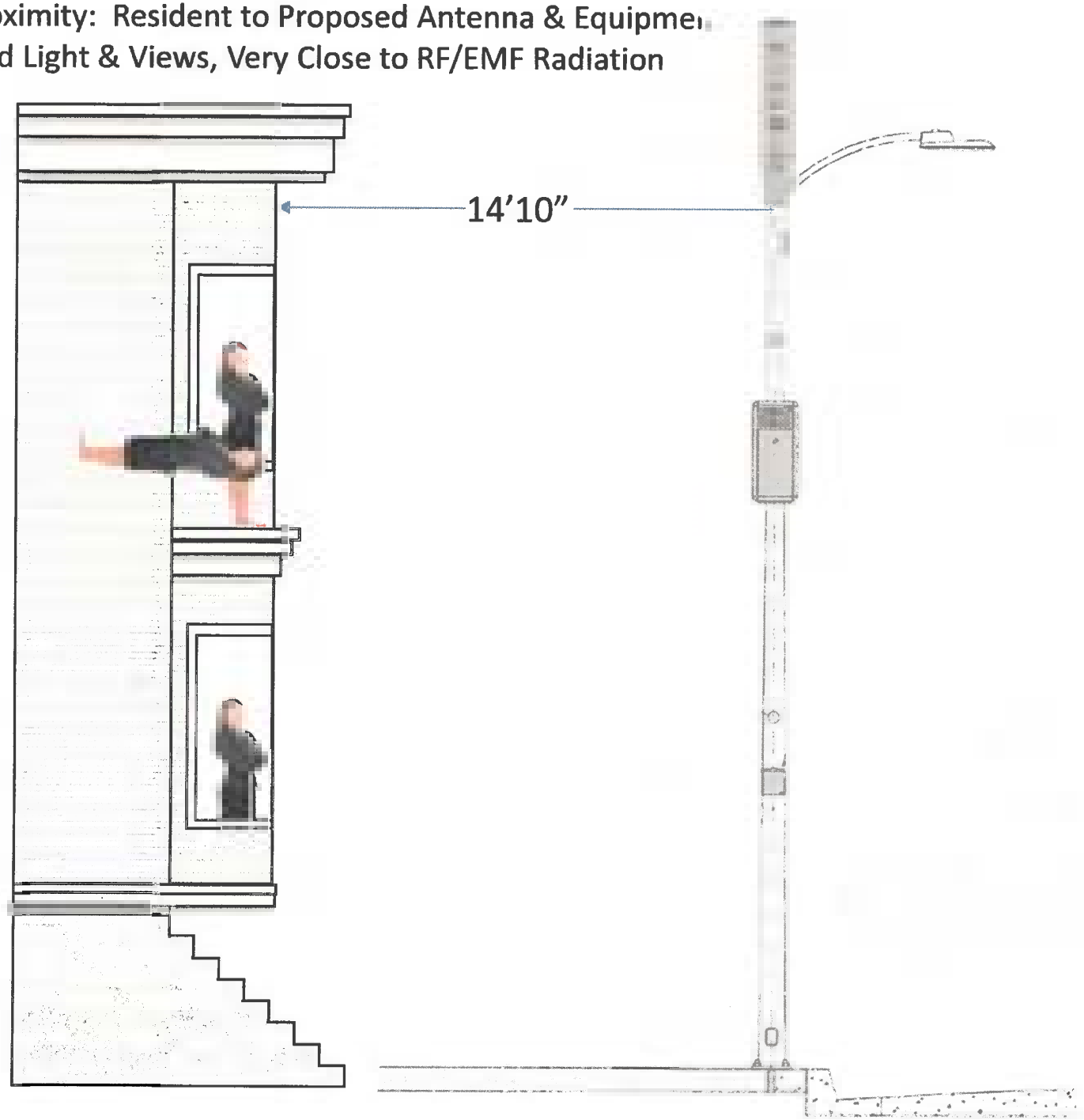

Fig 7 – Other Concerning Details not Disclosed in Mobilitie's Notice

- 3x4" notice of RF emissions danger only short-stay pole workers see…
- and use the un-highlighted 10x9x4½" power shutoff box 20' below to protect themselves

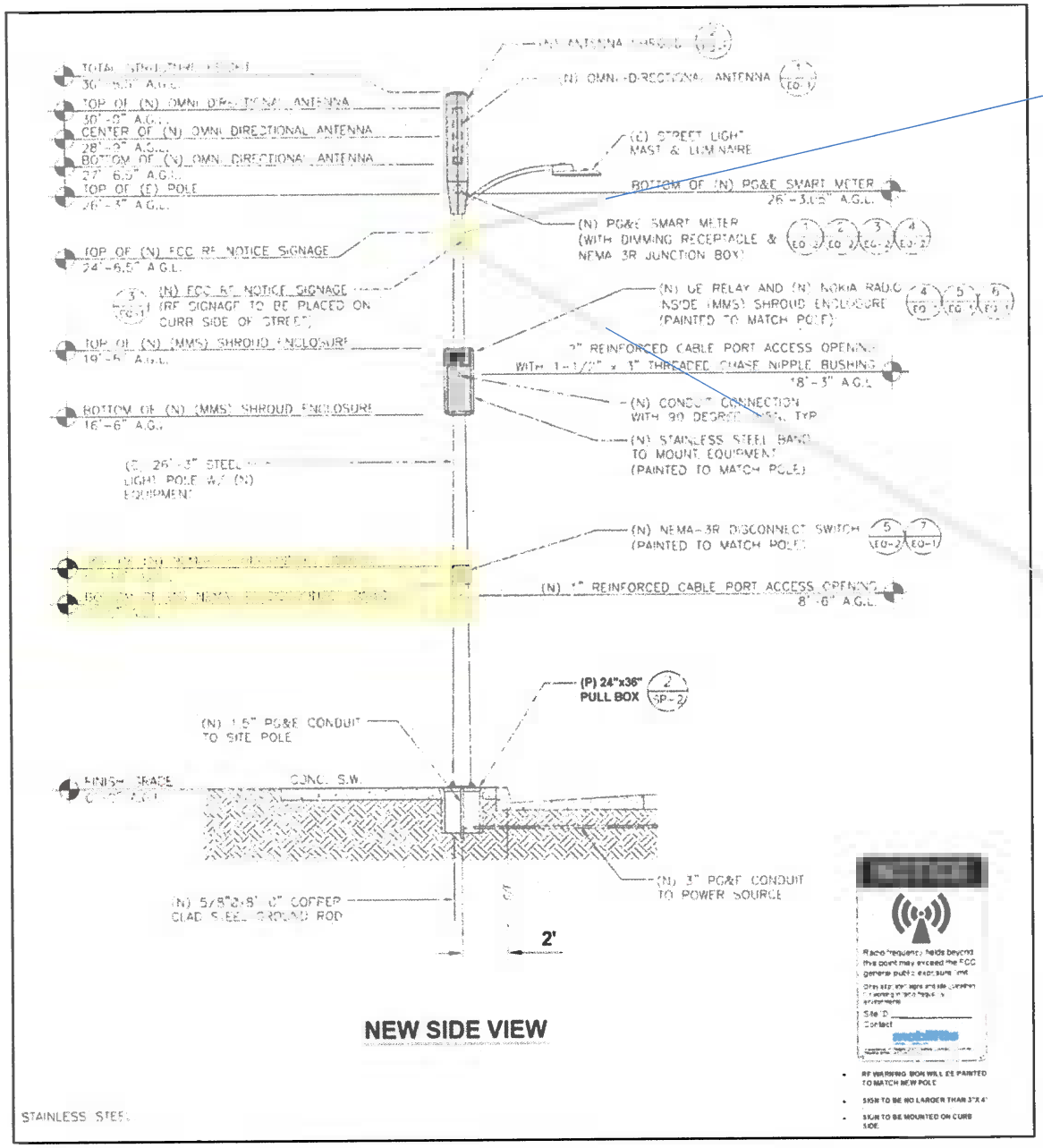

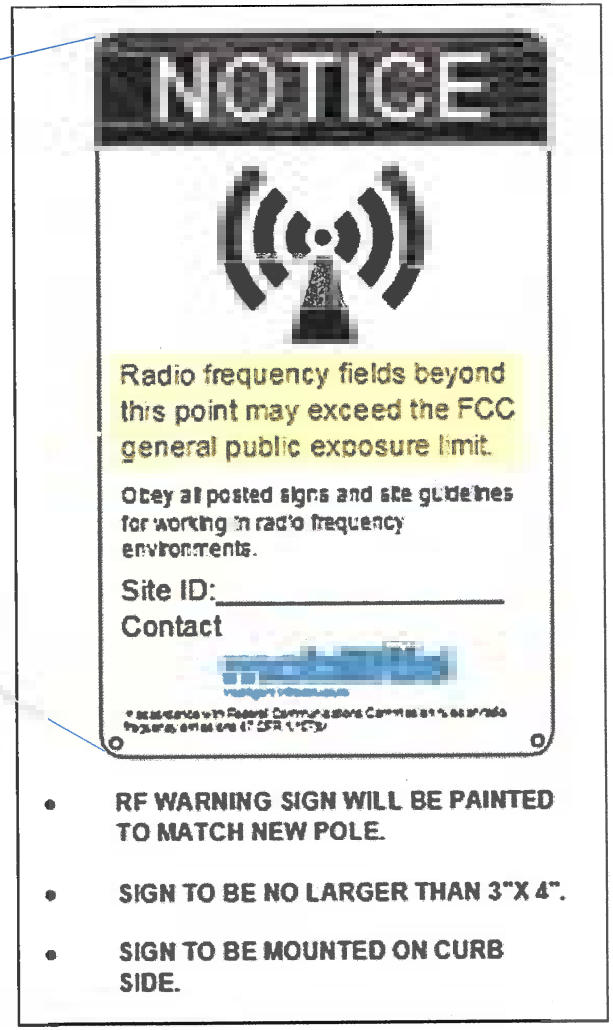

Fig 8 – Other Design Details not Disclosed in Mobilitie's Notice –

- equipment box mounting deeper than shown in enhanced photos
- street/house width of equipment, other equip dimensions

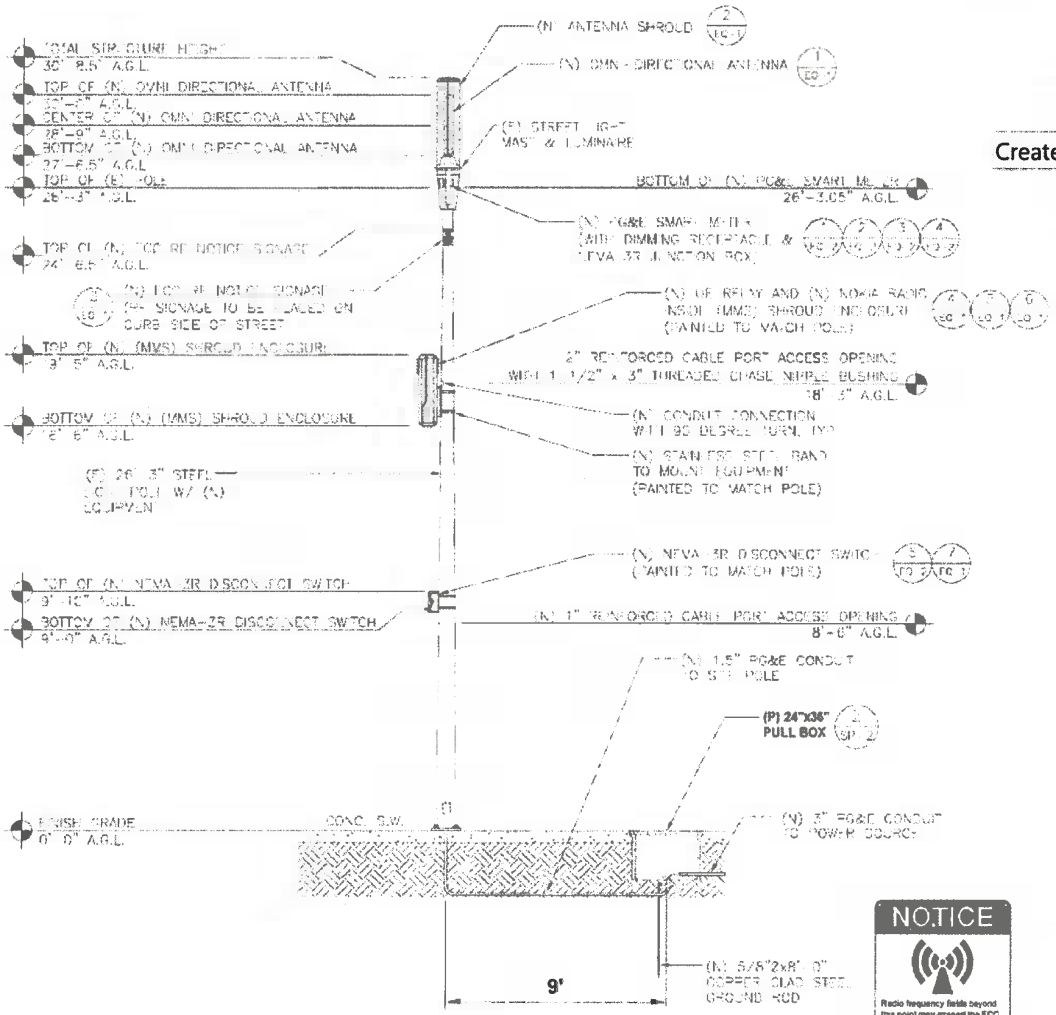

NEW FRONT VIEW

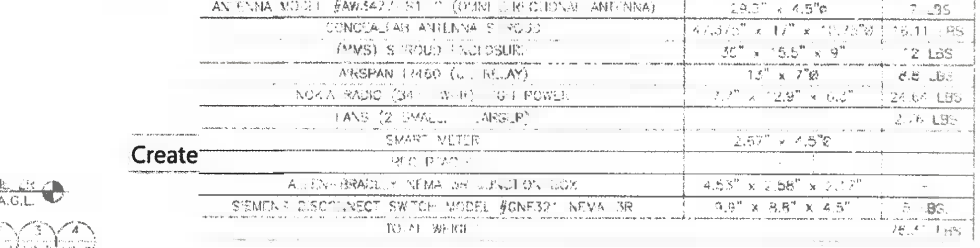

EQUIPMENT CHART

QTY.	DESCRIPTION	DIMENSIONS	WEIGHT
	ANTENNA MODEL #AWS4277-N1-7 (OMNI DIRECTIONAL ANTENNA)	29.5" x 4.5"Ø	7 LBS
	CONCEALEAB ANTENNA SHROUD (MMS) SHROUD ENCLOSURE	47.5/8" x 17" x 10.25"Ø 35" x 15.5" x 9"	16.11 LBS 12 LBS
	AIRSPAN (4460 CELL RELAY)	13" x 7"Ø	4.8 LBS
	NOKIA RADIO (34" x 9" x 6") 18 POWER	7.7" x 12.9" x 6.2"	24.64 LBS
	FANS (2 SMALL AIRSLIP)		2.76 LBS
	SMART METER	2.57" x 4.5"Ø	
	PEC (PAD)		
	ALLEN-BRADLEY NEMA 3R JUNCTION BOX	4.53" x 2.58" x 2.12"	-
	SIEMENS DISCONNECT SWITCH MODEL #GNF321 NEMA 3R	9.8" x 8.8" x 4.5"	5 LBS
	TOTAL WEIGHT		76.4 LBS

Create

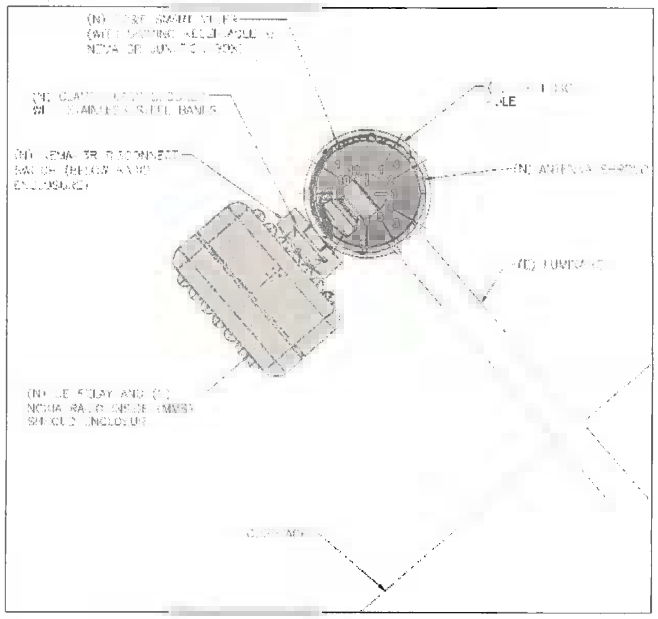

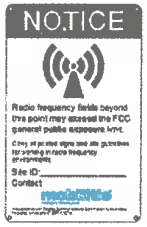

Exhibit J: Protests from other parties

	dataobjectid	objectid	sourceobject	Permit	Addresses	Date Send	Date Received	Objector Name	Objector Contact	Reason	Protest Date	Location	Permitee	Comment Type	Objector Email	Objector Phone	withdrawn	withdrawn Date	PermitType
Open	65772	5	18wr-0033	18wr-0033				Sean Foley		I protest enacting this permit. I am concerned that it will be unsightly and invite people to deface it with graffiti.	6/18/2018	1509 SHRADER ST		Object	Tiger69er@hotmail.com	4155047653			Wireless
Open	65724	5	18WR-0033	18WR-0033				Brigitte Bogert		I protest the placement of this personal wireless service facility. There has not been sufficient notification of the public. It also detracts from the beauty of the street. We will elaborate on theses concerns and more in a detailed letter.	6/15/2018	1509 SHRADER ST		Object	babogert@yahoo.com	4159866708			Wireless
Open	65553	5	18WR-0033	18WR-0033				Lutiel Leis	4909 17th Street	studies that this type of radio frequency/wireless transmitter installation does not interfere with other RF-based consumer grade household equipment such as mobile telephone, wireless access points etc. And I would also like assurances that having an antennae at this close proximity to my home does not pose any health concern. Can the company provide metrics in regards to post-installation neighborhood complaints and rate at which they were addressed in other metropolitan installations? Have they ever had to uninstall a unit due to complaints? Absent this information, I object to the installation.The information provided in the Notice of Tentative Approval is vague and not substantial. What does "personal wireless service" mean - is, personal for who? What is the intended use of the antennae? Is this an income-generating installation for the company in the midst of a residential neighborhood on city-owned property?In believe that in lieu	6/11/2018	1509 SHRADER ST		Object	lutielleis@gmail.com	4155956955			Wireless

Exhibit K: Public Hearing Notice

Public Hearing for Personal Wireless Service Facility Site Permit Application 18WR-0033 - Message (HTML)

MESSAGE

DPW-Wireless Program

Public Hearing for Personal Wireless Service Facility Site Permit Application 18WR-0033

[redacted]

[redacted] F2 DPW Order(187677).pdf

Hello,

There will be a hearing for the above-referenced application on 7/9/18. Please see the attachment for additional information.

Thank you,

Bureau of Street Use and Mapping
San Francisco Public Works
City and County of San Francisco
1155 Market Street- 3rd Floor
San Francisco, CA 94103
(415) 554-5810
sfpublicworks.org <http://www.sfpublicworks.org/> - twitter.com/sfpublicworks <http://www.twitter.com/sfpublicworks>

Click a photo to see recent email - and social updates

[redacted]

PUBLIC COMMENT

San Francisco Public Works
Bureau of Street use and Mapping
1155 Market Street
San Francisco, CA 94104
Attn: Wireless Permit Protests

July 8, 2018

Re: Mobilitie permit at 1509 Shrader Street

To whom it may concern,

As some of my neighbors have (or will attest), there are many reasons to question whether the addition of personal wireless facilities to our neighborhood are in the best interest of the community and the fabric of Cole Valley.

Safety

I have concerns of adding a few hundred pounds and an additional ~10% in height to this telephone pole. It would make the pole top heavy and in a city prone to earthquakes, seems like a significant risk.

Inability to guarantee compliance with FCC rule to eliminate/reduce electronic interference

While any one carrier may claim that they can meet this demand, there are up to 4 wireless carriers seeking to install these small cells to close their 'coverage gaps'. The guarantee that an individual cell will not cause interference, is not meaningful absent proof that competing small cells within the same area will not have a cumulative effect that could impede the operation of my consumer grade RF-based household equipment (such as wireless access points, garage doors etc).

Aesthetics

By SF Planning Department's own omission "the cumulative effect of multiple equipment enclosures may result in a cluttered design that would not be viable". As mentioned above, as competing carriers try to blanket the same neighborhoods with their individual cells, the block may become cluttered with these cells. If Mobilitie seeks coverage on this block now, it is only expected that the other carriers will follow suit.

Property Values

I am greatly concerned that the addition of a small cell this close to my home will decrease my property value. There is research that concludes property values decrease by as much as 20% when said property is near to a cell tower. My home is my biggest asset and will be less than

150 feet from this installation. The city should not support such a potential property value decreasing event for any of its tax paying citizens.

There is a better option

SF has always been a forward-thinking community. I urge the city to develop a well thought out plan of supporting 5G through the installation of safer underground fiber optic cabling to each home. Such wired fiberoptic connections are more reliable, faster, provide greater capacity (in an ever growing tech focused city) and provide more cyber security.

I urge a vote not to approve this Mobilitie application because this tower does not belong in the residential neighborhood of Cole Valley. It disturbs the aesthetic of the community and as an eye sore and safety hazard, will reduce property values and decrease overall appeal of the affected homes in the eyes of potential new buyers.

Luciel Leis
4909 17th Street

Mejia, Xiomara (BOA)

From: Lu L <lululeis@gmail.com>
Sent: Saturday, October 27, 2018 3:37 PM
To: Brown, Vallie (BOS)
Cc: Brian D Sedar; Lu Leis; BoardofAppeals (PAB)
Subject: Re: Appeal No. 18-130; 1509 Shrader Street - 11/14/18 5 pm hearing
Attachments: Supervisor Vallie Brown.pdf; SFDPW Protest Letter.docx

October 26, 2018

Supervisor Vallie Brown
1 Dr. Carlton B. Goodlett Place,
City Hall, Room 244
San Francisco, Ca. 94102-4689

Dear Supervisor Brown,

I am a District 5 homeowner and full time resident and have been so for 12 years. As you may be aware, the city of San Francisco is in the process of granting permits to the various wireless carriers for the installation of small cells for eventual 5G deployment. The fact of these installation is a complex one and I fully understand it requires obligations to and navigation of strong Federal laws written to discourage and prevent cities from retaining control of such installations.

111 of my neighbors and I recently protested the installation of such a cell in front of, and dangerously close to, the 1509 Shrader Street address. I am attaching my letter of protest here so you can see the basis upon which I showed up at City Hall to share my objection. I write to you because I know you to be a civic and environmentally minded citizen of this city and
resident of this district and I suspect that if one of these small cells was slated to be installed outside of your home, that you would have many of the same concerns that we do. San Francisco has always been a progressive city, bent on the protections of its diverse citizenship and has led the way in many groundbreaking and uphill battles. We need our elected officials to represent our interests, not those of telcos or other big businesses in this matter. I urge you and our other City Hall elected officials to take up this cause to fully understand the potential effects of hundreds, if not thousands, of these installations throughout our city.

While the law does not permit the prevention of these permits based upon health concerns, it's worth mentioning that many of our neighbors to the north, east and south (Mill Valley, Sebastapol, Piedmont, Palo Alto etc) have taken a stance against the installations and at the very least, are limiting their installations to commercial (not residential) districts. If the International Association of Firefighters opposes the installation of these cell towers on their firestations due to health concerns, I believe it goes without saying that any citizen should be granted the same protections.

Thank you for your time. I am happy to meet with you at any point to discuss this further. While the larger fight is hopefully considered, I urge you to support our request to have this installation denied.

Luciel Leis
District 5 Resident
4909 17th Street, San Francisco, CA 94117

Mejia, Xiomara (BOA)

From: Matthew Fladeland <matthew_fladeland@yahoo.com>
Sent: Monday, October 29, 2018 6:05 PM
To: BoardofAppeals (PAB)
Cc: YinLan Zhang; Brown, Vallie (BOS)
Subject: Re: permit 18WR-0033

BOARD OF APPEALS
OCT 30 2018
APPEAL # 18-130

This message is from outside the City email system. Do not open links or attachments from untrusted sources.

To Board of Appeals,

We write to strongly oppose the issuance of permit 18WR-003 on the grounds that the applicant did not notify adjacent neighbors as required (we are less than 150ft from the proposed installation), and that the proposed project will have a significant negative impact on the character of our block given the size and nature of the installation.

We live in the duplex at 1504-06 Shrader St. in San Francisco and no one in our building was notified by the applicant at any time during process. We do not believe that we were properly notified of this permit request as required by city law. Had we been notified we would have stated our opposition given our proximity to 2 other new cell towers each a block away and the fact that this would be the highest structure on our street, changing the visual character of this block and vicinity.

Having read the notice before it was taken down last week, the applicant is misrepresenting the impact of the installation in terms of size and scope resulting in undefined impacts to neighbors. The project as now defined would entail a wholesale rebuild of the tower with a base 3x as large, as well as medium sized electronics box, not shown or hidden in the figures provided in the notice. The figures in the notice were also taken at foot level, which is a unreasonable and misleading perspective, leading the observer to believe the existing light pole to be taller than it actually is.

The notification was not sufficient. The description was misleading. The impacts of granting the permit are largely negative and have not been reasonably considered in issuance of this permit.

We do not believe that the city has weighed the potential impacts of granting this permit. The local neighbors that will be most impacted by the reduction in home values, full use of sidewalk and viewshed, were not provided due process in the issuance of this permit. In the past few years a tower was added to the corner of Shrader and Alma, and then last month another was installed at 17th and Stanyan. I don't believe it is reasonable to add additional towers in a residential neighborhood. The cumulative impact of approving all of these towers is not being reasonably assessed.

We sincerely hope you will vote to not approve this during appeal hearing on Nov 14th.

Matt Fladeland & YinLan Zhang
1504 Shrader St.
San Francisco, CA 94117
415-682-8198

Mejia, Xiomara (BOA)

From: Jeanne Gallo <jeannegallo@yahoo.com>
Sent: Tuesday, November 6, 2018 6:24 PM
To: BoardofAppeals (PAB); briandsedar@gmail.com
Subject: Permit 18WR-0033

BOARD OF APPEALS
NOV 07 2018
APPEAL # 18-130

This message is from outside the City email system. Do not open links or attachments from untrusted sources.

Dear San Francisco Board of Appeals,

I am the homeowner at 1534A Shrader Street since 1993. I must be in New York the evening of your November 14th hearing so I am writing in the hopes I can convey my strong objection to the Department of Public Works granting Permit 18WR-0033 for a new cell site on our side street and to ask that the Board of Appeals please deny it.

I believe the Notice we received from Mobilitie and Public Works this summer was both designed and allowed to deceive residents on our street. We were not shown or told about the very large equipment cover halfway up the pole. We were definitely told there would be no new poles put up--or replaced--and now we learn that a new, taller pole is to be installed. We were also led to think that our exceptional views would be protected, but we later learned no one but the cellular company considers our hillside vista important.

It should mean something that 112 of us asked Public Works to reject this permit. We were ignored, then silenced. We can all see the cellular company was looked out for and even helped to put in a taller pole to improve their position above us when our neighborhood has been told our views don't count.

I hope the Board of Appeals, in its greater wisdom, will deny this permit to remind the cellular company and Public Works that on a beautiful residential utility-free side street like ours, the residents' voices and their needs are important too. If Public Works feels it must have these small cells on light poles, they need to stay small. They can and should be on the thoroughfares only, and the review process must be followed.

Very sincerely,
Jeanne Gallo
1534A Shrader St.
San Francisco, 94117

Longaway, Alec (BOA)

From: Bern Shen <bernshen@gmail.com>
Sent: Wednesday, November 7, 2018 10:12 AM
To: BoardofAppeals (PAB)
Cc: Brian D Sedar; McDonald Libby; Swanson Linda; Swanson Randy; gmail Ann
Subject: Re: Appeal #18-130 1509 Shrader Cell Antenna

Dear SF Board of Appeals members,

As retired healthcare professionals, my wife Ann (a former UCSF nurse executive) & I (a former UCSF faculty physician in emergency medicine) strongly urge you to deny the permit for the cell antenna being contemplated for the light pole between our neighbors at 1509 Shrader St. & our home at 1515 Shrader St.

Our reasons include:

- Unknown & potentially adverse health effects of the equipment
  - The extensive & complex peer-reviewed published medical literature on the human health effects of radiofrequency radiation shows mixed results, but raises enough concerns that (even though we would welcome faster/more reliable cell phone service) we do not want to be exposed to this powerful antenna, just a few meters from our home.
  - The FCC human exposure guidelines suggest that exposure levels at the base (i.e., street level) of similar antennas may be safe, but that for those of us who live & sleep on upper floors, hazardous exposures could occur if we remain "within a few feet of the antenna for several minutes or longer".
  - This KPIX ConsumerWatch news item about the potential health risks of these 5G cell towers is rather alarming & certainly at least raises questions.
  - The equipment apparently warrants an FCC warning sign, & has been prohibited from being installed within 50 feet of SF fire stations - why wouldn't ordinary citizens have the same protection?
  - As healthcare professionals, we support the Precautionary Principle that's commonly embraced in Europe, with its four main components:
    - Taking preventive action in the face of uncertainty
    - Shifting the burden of proof to the proponents of an activity
    - Exploring a wide range of alternatives to possibly harmful actions
    - Increasing public participation in decision making
- Significant discrepancies between what was described in the permit application or public notification & the apparent reality of the installation
  - Not 1, but 2 antennas
  - Not "no noise", but 3 cooling fans
  - Not "no new poles", but a new & taller pole
  - Definite adverse impact on the views out of our street-facing windows
  - I'm certainly not a regulatory expert, but my reading of the FCC
  - OTARD (Over the Air Reception Device) rule of 1996 that facilitates broadcast site installations suggests that if the antenna is greater than 1 meter in diagonal measurement, local jurisdictions can in fact block installations.
- Concerns about property value

- We have material concerns about risk to our property from poorly maintained electrical equipment, given the very recent multibillion dollar judgment against PG&E for the Santa Rosa fires.
- We're also concerned about decreases (perhaps up to 10%) in our home's property value from increased visual clutter & potential concerns of future buyers, similar to admittedly imprecise but nonetheless real perceptions around power lines - one of the reasons we move into our neighborhood was the pleasant street view created by having utility cables buried underground. We hope you can empathize with our objections to having unsightly equipment mounted so close to our living room & bedroom windows.

- Near unanimous neighborhood consensus against this installation
  - Almost all of our neighbors (112 in all) within block or two's radius signed a petition against the installation.
  - Our neighbors include a diverse range from young families with children to elders, many of us active or retired professionals (speaking for myself, in addition to my clinical work, I directed the health practice at the Institute for the Future in Palo Alto, & worked for tech companies including HP, Oracle & Intel, where I was the chief healthcare strategist - so I'm certainly not anti-technology… just concerned as someone with some expertise in both health & technology).

Thank you for your consideration,

-Bern Shen & Ann Williamson

1515 Shrader St.
+1 415 577 3345

Longaway, Alec (BOA)

From: Brown, Vallie (BOS)
Sent: Saturday, October 27, 2018 4:25 PM
To: Lu L
Cc: Brian D Sedar; BoardofAppeals (PAB); Remski, Derek (BOS)
Subject: Re: Appeal No. 18-130; 1509 Shrader Street - 11/14/18 5 pm hearing

Hi Luciel,

Thank you for your email.

I completely agree with you regarding the cell towers and the fact the communications companies can put them anywhere they like without local governments having any real control in the matter. The same action happened with all the utility boxes that AT&T put on our sidewalks, unacceptable.
I'm looking into what we can do to help control placement of the cell towers?
I've cc my Aide, Derek to assist you.
He can fill you in after he meets with DPW.

Stay tune,
Vallie

BOARD OF APPEALS
NOV 07 2018
APPEAL # 18-130

Sent from my iPhone

On Oct 27, 2018, at 3:36 PM, Lu L <lululeis@gmail.com> wrote:

This message is from outside the City email system. Do not open links or attachments from untrusted sources.

October 26, 2018

Supervisor Vallie Brown
1 Dr. Carlton B. Goodlett Place,
City Hall, Room 244
San Francisco, Ca. 94102-4689

Dear Supervisor Brown,

I am a District 5 homeowner and full time resident and have been so for 12 years. As you may be aware, the city of San Francisco is in the process of granting permits to the various wireless carriers for the installation of small cells for eventual 5G deployment. The fact of these installation is a complex one and I fully understand it requires obligations to and navigation of strong Federal laws written to discourage and prevent cities from retaining control of such installations.

111 of my neighbors and I recently protested the installation of such a cell in front of, and dangerously close to, the 1509 Shrader Street address. I am attaching my letter of protest here so you can see the

basis upon which I showed up at City Hall to share my objection. I write to you because I know you to be a civic and environmentally minded citizen of this city and
resident of this district and I suspect that if one of these small cells was slated to be installed outside of your home, that you would have many of the same concerns that we do. San Francisco has always been a progressive city, bent on the protections of its diverse citizenship and has led the way in many groundbreaking and uphill battles. We need our elected officials to represent our interests, not those of telcos or other big businesses in this matter. I urge you and our other City Hall elected officials to take up this cause to fully understand the potential effects of hundreds, if not thousands, of these installations throughout our city.

While the law does not permit the prevention of these permits based upon health concerns, it's worth mentioning that many of our neighbors to the north, east and south (Mill Valley, Sebastapol, Piedmont, Palo Alto etc) have taken a stance against the installations and at the very least, are limiting their installations to commercial (not residential) districts. If the International Association of Firefighters opposes the installation of these cell towers on their firestations due to health concerns, I believe it goes without saying that any citizen should be granted the same protections.

Thank you for your time. I am happy to meet with you at any point to discuss this further. While the larger fight is hopefully considered, I urge you to support our request to have this installation denied.

Luciel Leis
District 5 Resident
4909 17th Street, San Francisco, CA 94117

<Supervisor Vallie Brown.pdf>

<SFDPW Protest Letter.docx>

Longaway, Alec (BOA)

From: Walker Allen <walker@pressclubsf.com>
Sent: Tuesday, November 6, 2018 10:36 AM
To: BoardofAppeals (PAB)
Subject: FW: 1509 Shrader Cell Site FINAL APPEAL - Wed Nov14 5pm City Hall Rm 416 - 3 Ways to Help - BoA emails due Thurs Nov8
Attachments: image001.png; image006.jpg; image003.png; image004.png; image010.png

Hello – I am a resident at 154 Carmel St. at the corner of Shrader. I am 100% opposed to this cel tower. Best, Walker

Walker Allen
Director of Sales and Events
Sidecar Hospitality
Press Club | Schroeder's | Pacific Cocktail Haven | The Elite Café
20 Yerba Buena Lane | San Francisco | California 94103
P 415.744.5000 | F 415.520.0752
walker@pressclubsf.com

From: Margaret Teskey [mailto:mags@tastecatering.com]
Sent: Monday, November 05, 2018 3:02 PM
To: Walker Allen
Subject: Fwd: 1509 Shrader Cell Site FINAL APPEAL - Wed Nov14 5pm City Hall Rm 416 - 3 Ways to Help - BoA emails due Thurs Nov8

Thought I would pass this on to you guys...

Margaret Teskey
President
Taste Catering and Event Planning

415 550 6464

www.tastecatering.com
www.pressclubsf.com
www.waltdisney.org/dining
www.filoli.org

Begin forwarded message:

> **From:** Brigitte & Hemang <brigittehemang10@gmail.com>
> **Date:** November 5, 2018 at 11:30:08 AM PST
> **To:** Brig and Hem <brigittehemang10@gmail.com>
> **Subject: Fwd: 1509 Shrader Cell Site FINAL APPEAL - Wed Nov14 5pm City Hall Rm 416 - 3 Ways to Help - BoA emails due Thurs Nov8**

Fyi, if you would like to join welcome

Please excuse the brevity or grammar, sent from a mobile device.

Begin forwarded message:

> **From:** "Brian Sedar" <briandsedar@gmail.com>
> **Date:** November 5, 2018 at 10:42:01 AM PST
> **To:** "'Brigitte & Hemang'" <brigittehemang10@gmail.com>
> **Subject: 1509 Shrader Cell Site FINAL APPEAL - Wed Nov14 5pm City Hall Rm 416 - 3 Ways to Help - BoA emails due Thurs Nov8**
>
> Hi Brigitte & Hemang,
>
> Please share ASAP with other Neighbors (besides Lu) – we don't have everyone's email...

der Cell Site FINAL APPEAL - Wed Nov 14th 5pm - City H

RSVP if you can Attend, OR are interested in the Party Bus!

briandsedar@gmail.com or (415) 290-2655

)LINE for emails to BoardofAppeals@sfgov.org - Thus Nov 8th 4:

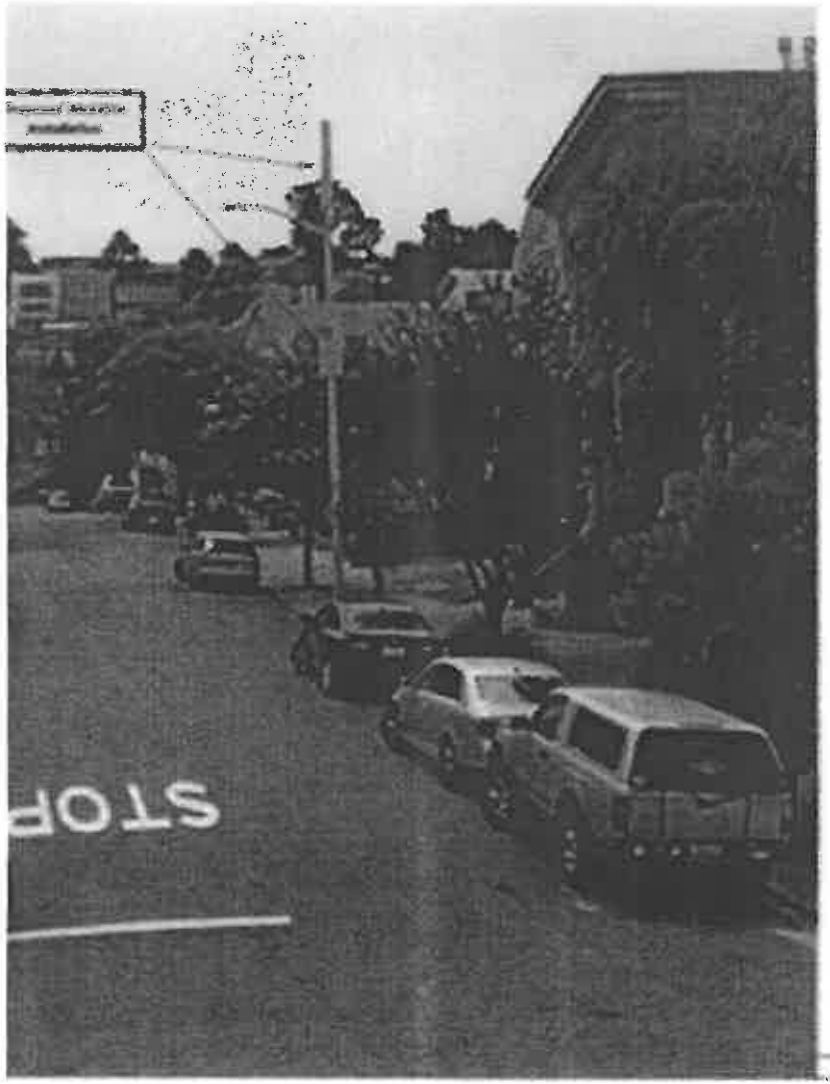
STOP

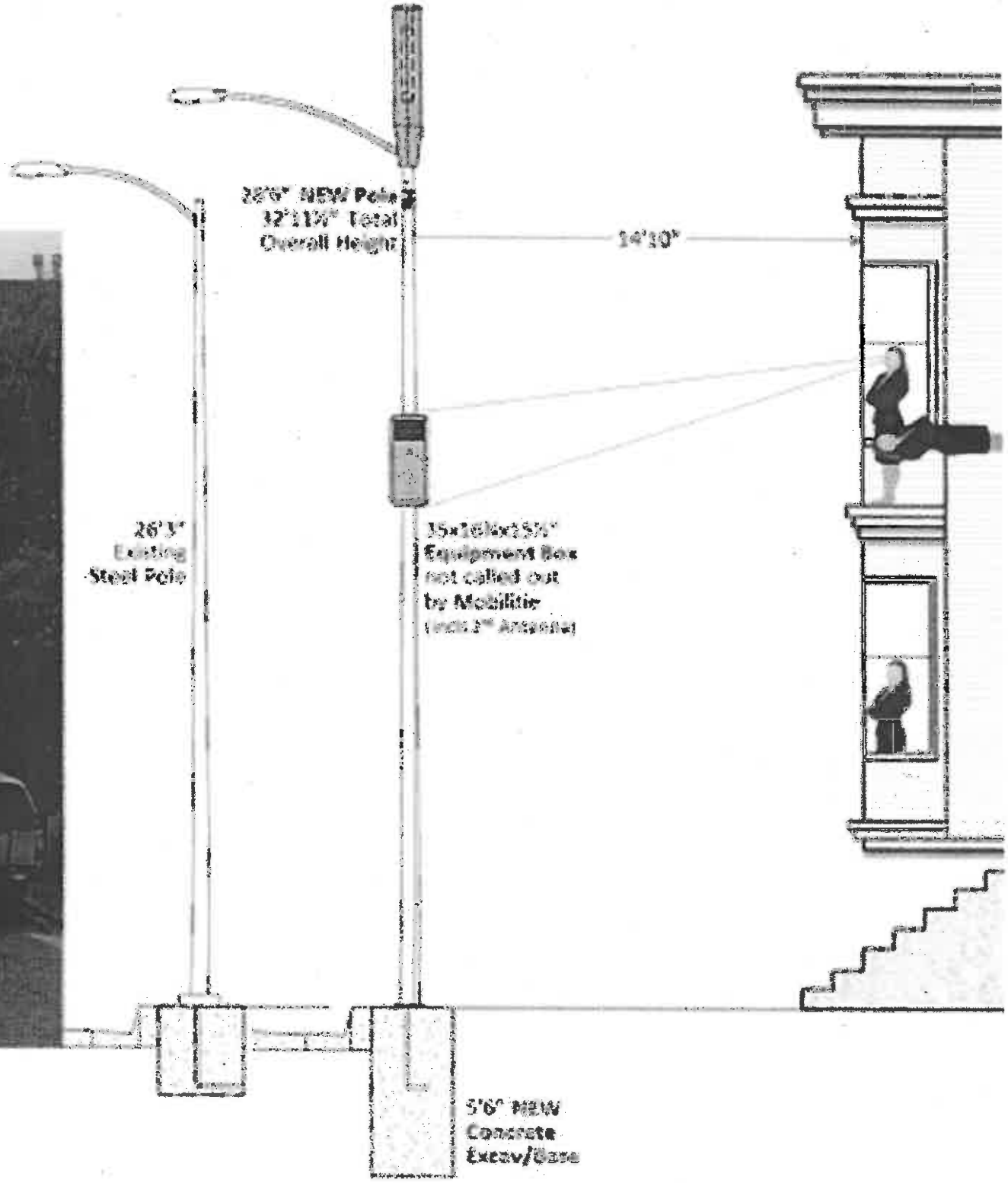
28'6" NEW Pole
32'11½" Total
Overall Height
14'10"
26'3"
Existing
Steel Pole
35x16x25½"
Equipment Box
not called out
by Mobilitie
5'6" NEW
Concrete
Excav/Base

Basis of Appeal - What we were Told / What they're Installing / What they Didn't Say

- "**NO NEW POLES**" (stated Condition of Approval)
  - **NEW, TALLER POLE** will be installed
  - 33' tall overall, 28'6" NEW base vs current 26'3" pole
  - NEW approx 6' deep concrete pier excavated below it

- "**Shall not Obstruct Views** or Light in Any adjacent Residential window" (Condition of Approval)
  - later: *'SF Planning will not take into account views from private properties'*
  - didn't tell us Shrader St is classed "**Excellent Views**" in SF General Plan
  - Mobilitie jumped on this city vistas location for its transmission capability
  - Shrader St has top-tier "**Single & 2 Family Residential Zoning**", yet
  - City handling our neighborhood like a no-views dense commercial district

- "Streamlined Equipment" - **largest mid-pole Equipment Box not** called out in photo simulation
  - **ignored** SF Planning Guideline to call out all equipment enclosures
  - smallest TelCo (20% mkt share); equip box **4x size** of next competitor

- "Safe as phone in your hand" - tiny **Warning Sign**, mounted 26'9½" up pole, and painted over!
  - ***"RF fields may exceed the FCC general public exposure limit"***
  - **SF Firefighters won't allow these sites w/in 50' of their stations**

- "One Antenna" - **Two Antennas** are being installed, 2nd in the large **Equip Box** at mid-pole height
  - SF Dept of Health **has not approved model** of 2nd Antenna for this site

  "**No Noise**. Uses passive cooling...no fans" - **Three** AC-powered **Fans** are being installed

- Shrader is an **underground utility district** - in mid-90s **residents paid** $15,000-45,000 per home hookup (2018 $) **to underground *all* their utilities**. Re-upgrading this metal pole w/taller one (but still not upgrading unsafe wood pole just 50' away) violates city Condition of approval

- "All Residents w/in 150' must be Notified" - Many residents **did not receive** May 25 photo **Notice**

Final Appeal - Wed Nov 14th 5pm, City Hall Rm 416 - 3 Ways to Help

- Mobilitie's **Permit was Approved by DPW** despite signatures of 112 Upper Cole Valley Neighbors asking for rejection – construction of NEW HIGHER POLE, BOX will commence without your help
- Our Appeal is filed – but **must still convince 3 of 4 SF Board of Appeal Members to Deny** the Permit based on Mobilitie and City Dept failures to follow their own process and Conditions

1. **Send an email*** to BoardofAppeals@sfgov.org, no later than 4:30pm Thus Nov 8th
   - **Especially if you did not receive the original May 25th Notice OR if you found it misleading** or deceptive in any way (2 photo simulations, Conditions of Approval, eg "no new poles" yet new taller base pole, that residential views would be protected, no health issues, etc)
   - or, Simply Reinforce **your request to Deny the Permit** as a neighbor who doesn't want this large-scale visual clutter of views, risk to health, your property value, fire insurance, etc
2. **Send an email*** to **our new Supervisor** Vallie.Brown@sfgov.org or our former Supv, MayorLondonBreed@sfgov.org along any of the above lines, asking for support or simply urging them that 112 neighbor/voters signed a Petition stating they do not want a cell tower at this particular residential location. Be sure to cc BoardofAppeals@sfgov.org
3. **IMPORTANT - ATTEND FINAL APPEAL HEARING – Wed Nov 14th 5pm City Hall Rm 416**
   - At Hearing **Numbers Will Matter**, BoA has told us this. **If you'd like you can speak 2-3min!**
   - **We can help get you there/home that evening!** We'll provide a **Party Bus** on Nov 14th if enough neighbors are game. **RSVP/email us*** if you plan to attend; OR if you like bus idea

- There are GREAT **new young families** in our neighborhood and some REALLY interesting longterm residents. It's been wonderful to meet you all; Maggie, Bern, Ann and I strongly recommend getting to know each other more and this is a great way to pull together and do so!

*cc briandsedar@gmail.com on all comms to City. RSVPs - your email address won't be shared w/neighbors


NOTICE
5'2"
10¾"
5'4½"
"Small Cell Site"
Equipment is Not Small
• comparison to young Resident sleeping 14'10" away
• Mobilitie Notice simulation did not point out large Equipment Box
• tiny RF Warning affixed at 26'9½"h then pointed out (seriously)
15½"W
(x 11-16½"D)
w/bracket, clamps & pole
35"

Mejia, Xiomara (BOA)

From: Melissa <melissaem@yahoo.com>
Sent: Wednesday, November 7, 2018 10:17 PM
To: BoardofAppeals (PAB)
Subject: Appeal #18-130 – 1509 Shrader Letter of Support

I am a homeowner at 4855 17th Street, close to Shrader. I and my family have lived at 17th/Shrader over 20 years.

I remember receiving a mailing with diagrams of a proposed cell tower. I remember finding the language of the copy to be technical and cryptic. I do not remember clear statements of intent in direct English. I concluded this must be a poorly written announcement of a proposal.

I am completely distressed to hear the decision to put a tall pole with a cell transmitter in my residential neighborhood was decided without input from the affected residents. I do not want this transmitter in my neighborhood. Studies show that transmitters are known to cause irreparable health problems in the people living nearby. I recently fought cancer, and do not want to have to fight it again. I find the city to be negligent and callous in knowingly misleading with an unclear mailing, and, consequently, placing the health of its citizens at risk.

I understand the cell, self driving car, etc. contemporary reality demands additional radio transmitters. I propose the city places them in front of commercial buildings, rather than in front of people's bedrooms.

Sincerely,
Melissa Mullin
4855 17th Street
San Francisco, CA 94117

Mejia, Xiomara (BOA)

NOV 08 2018
APPEAL # 18-130

From: Remski, Derek (BOS)
Sent: Thursday, November 8, 2018 12:08 PM
To: BoardofAppeals (PAB)
Cc: Brown, Vallie (BOS)
Subject: Sup. Vallie Brown - Support of Appeal #18-130; 1509 Shrader Street
Attachments: Supervisor Vallie Brown - Support for Appeal #18-130; 1509 Shrader.pdf

Dear Clerk of the Board,

Please see attached letter of support from District 5 Supervisor Vallie Brown for Appeal #18-130; 1509 Shrader. Please share with members of the Board of Appeals and include in the official record.

If you have any questions, please let me know.

Derek Remski
Legislative Aide – District 5
Office of Supervisor Vallie Brown
San Francisco Board of Supervisors
415-554-6783 | derek.remski@sfgov.org

Member, Board of Supervisors
District 5

City and County of San Francisco

VALLIE BROWN
浦慈理

Dear Members of the Board of Appeals:

I am writing to you today to ask that you uphold Appeal #18-130; 1509 Shrader Street to be heard by the San Francisco Board of Appeals on November 14, 2018. Over the last few months my office has received communications from several of my constituents in District 5 regarding public noticing, improper public noticing, or a lack of public noticing with regard to installation of new wireless cellsites and antennas in their neighborhoods. In some of those cases my staff found that the companies failed to follow public noticing guidelines established by the San Francisco Department of Public Works and by the State of California.

I am deeply concerned over the appearance of a lack of adherence, on the part of telecommunications and their agents, to properly provide public notice to neighbors living close to proposed wireless cellsites and antennas. In the case of 1509 Shrader, 112 neighbors living close to the proposed wireless cellsite are signatories on a protest in which many claim they were not given public notice as required by local and state guidelines. For that reason I ask that you uphold Appeal #18-130; 1509 Shrader.

Thank you very much for your consideration.

Best wishes,

Vallie Brown

Vallie Brown
Supervisor, District 5

City Hall • 1 Dr. Carlton B. Goodlett Place • Room 244 • San Francisco, California 94102-4689 • (415) 554-7630
Fax (415) 554-7634 • TDD/TTY (415) 554-5227 • E-mail: vallie.brown@sfgov.org

Mejia, Xiomara (BOA)

From: Minna Yoon <minnayoon@gmail.com>
Sent: Thursday, November 8, 2018 11:52 AM
To: BoardofAppeals (PAB)
Cc: briandsedar@gmail.com
Subject: RE: 1509 Shrader St (Permit number 18WR-0033)

NOV 08 2018
18-130

This message is from outside the City email system. Do not open links or attachments from untrusted sources.

Dear Board of Appeal Members,

I have lived at 1461 Shrader St for over 10 years. I am concerned and strongly protest the installation of the wireless facility at 1509 Shrader Street (Permit number 18WR-0033).

Mobilitie has been deceptive in its representation of the pole that it is installing. There has been significant misinformation, lack of information regarding the installation of the wireless facility:

a. Mobilitie failed to inform the public—there was an absence of any signage during the notification period in June

b. Mobilitie misrepresented that the existing pole would be replaced with a significantly taller pole and that there would be a significant dig of 6 feet beneath the ground.

c. The proposed "small" equipment box is very large and was not called out in the photo simulation (almost 3 tall!).

d. The tiny warning sign reading "RF fields may exceed the FCC general public exposure limit" will be mounted almost 27 feet up the pole and painted over.\

e. One antenna was mentioned in the permit, but TWO antennae, including one in the equipment box, will actually be installed.

As a resident on Shrader St, this new pole with its large antennae would significantly degrade our views looking uphill. Shrader Street is classed as having "Excellent views" in SF General Plan, and the installation of this cell site would significantly detract from these views and compromise the feel of the neighborhood.

I am unfortunately unable to attend the hearing on Wednesday, November 14 due to a work commitment, but I urge you now to rethink the installation of this cell site.

Sincerely,

Dr. Minna Yoon, ND, L.Ac.

1461 Shrader St

Longaway, Alec (BOA)

From: S F <tiger89er@hotmail.com>
Sent: Thursday, November 8, 2018 1:57 PM
To: BoardofAppeals (PAB)
Cc: briandsedar@gmail.com
Subject: Protesting cell site proposal for 1509 Shrader Street

Dear Board of Appeal Members,

I am very concerned by the installation of the proposed cell site at 1509 Shrader Street. As the upper floor resident at 4903 17th Street, my bedroom is only 45' away from the proposed pole—*with views of the pole*—and will be almost in direct line with the proposed equipment box.

It is very upsetting that the residents of Cole Valley have been deliberately misled by the original notification. Not only was there a lack of signage in the neighborhood, but several details regarding the placement of the pole, the height and the number of antennae were misrepresented or lacking.

I have been a resident of Cole Valley for 14 years, and my condo is my most significant investment. I am concerned that the installation of this pole so close to my house and in a very beautiful area of Cole Valley may degrade my property values.

I strongly urge you to consider revoking the permit for the wireless facility at 1509 Shrader.

Sincerely,

Sean Foley

4903 17th Street

Longaway, Alec (BOA)

From: Julie Karasik <karasik.julie@gmail.com>
Sent: Thursday, November 8, 2018 3:47 PM
To: BoardofAppeals (PAB)
Subject: appeal #18-130
Attachments: IMG_8459.jpg

> This message is from outside the City email system. Do not open links or attachments from untrusted sources.

Dear sir or madam,

It has come to our attention by concerned neighbors that new cell phone equipment is being installed on our street that will be unsightly, large and affect our view. I have attached a picture of the Marin Headlands view from one of our windows as it will be affected by this new pole.

Please do not allow this to go forward.

Best,
Julie

--
Julie Karasik
karasik.julie@gmail.com

BOARD OF APPEALS
NOV 08 2018
APPEAL # 18-130

Longaway, Alec (BOA)

From: Sonya Abrams <sonya.abrams@gmail.com>
Sent: Thursday, November 8, 2018 3:12 PM
To: BoardofAppeals (PAB)
Cc: briandsedar@gmail.com
Subject: Objection to proposed cell site at 1509 Shrader St.

Dear Board of Appeals members

We are residents of upper Shrader Street at 1560 Shrader Street. We purchased and moved into our new home as of one year ago, selecting this location particularly for the beauty of upper Cole Valley. We are upset by the proposed installation of the cell site at 1509 Shrader St. We were not notified about the cell site nor did we see any notifications about the cell site. We feel it raises concerns about safety and we are worried it would negatively impact the property values in our neighborhood.

As parents of 3 small children, we are particularly concerned with the seemingly duplicitous way in which this cell site is being pushed through in a neighborhood with many young families as well as the lack of information regarding it. We urge you to reconsider the installation of the cell site.

Thank you.

Sonya Abrams

1560 Shrader St.

4153172844

Longaway, Alec (BOA)

From: Jeff Solomon <jsolomon13@me.com>
Sent: Thursday, November 8, 2018 3:45 PM
To: BoardofAppeals (PAB)
Subject: Appeal:18-130

This message is from outside the City email system. Do not open links or attachments from untrusted sources.

Hello,

Per reviewing the proposed construction and cell tower, as a resident of Shrader Street, I formally would like to object to this construction/modification.

Regards,

Jeff Solomon
415.887.8557
1537 Shrader Street

BOARD OF APPEALS
NOV 08 2018
APPEAL # 18-130

Longaway, Alec (BOA)

From: Randall Swanson <rwswanson@gmail.com>
Sent: Thursday, November 8, 2018 4:02 PM
To: BoardofAppeals (PAB)
Subject: Appeal #18-130 - 1509 Shrader Wireless Service Facility

Please reject Application No. 18WR-0033 submitted by Mobilite, LLC for a Personal Wireless Service Facility Site Permit in the vicinity of 1509 Shrader Street.

The original notice was deceptive and misleading in several ways. In particular, the large equipment box located on the pole was not highlighted and appeared to be a part of the house at 1509 Shrader Street. The current proposed installation does not meet the San Francisco Public Works Conditions.

Thanks for your consideration,

Randall W Swanson
1517 Shrader Street

Longaway, Alec (BOA)

From: Lori Coleman <lsc94133@yahoo.com>
Sent: Thursday, November 8, 2018 3:12 PM
To: BoardofAppeals (PAB); Brown, Vallie (BOS); Breed, Mayor London (MYR)
Cc: briandsedar@gmail.com
Subject: 1509 Shrader Cell Site- Objection to the new utility pole
Attachments: 1525 Shrader St.jpg

> This message is from outside the City email system. Do not open links or attachments from untrusted sources.

I am a homeowner of 1525 Shrader St,located 2 houses from the proposed new utility cell pole at 1509 Shrader St, and I hereby express my opposition to this utility pole plan for the following reasons-

1) It will obstruct my views of the historic St. Ignatius and Lone Mountain college per the attached photo. The new pole will be 7 feet taller and much wider than the existing pole.

2) Homeowners on this street paid large sums of money to underground utilities specifically to avoid this type of situation where a utility is highly visible and detracts from our views and curb appeal.

3) I can see the existing pole from 5 windows out my house and making it taller and wider will obstruct views from every window.

4) I understand there are unknown health concerns living close to the RF fields. If it is safe, why won't SF Firefighters allow them within 50' of their stations and there is a warning sign on the pole itself?

5) The initial notice was misleading and incorrect. There was supposed to be no new pole, no views obstructed, and one antennae. Instead there is a new pole, obstructed views, and two antennae's.

We have supplied over 112 signatures of neighbors in opposition to this utility pole and I respectfully request your support and respect of the taxpayer wishes. I will not be in town for the November 14th Final Appeal hearing, but submit my statement herein.

Regards,
Lori Coleman
1525 Shrader St.

Longaway, Alec (BOA)

From: Brian Sedar <briandsedar@gmail.com>
Sent: Thursday, November 8, 2018 3:37 PM
To: Sonya Abrams
Cc: BoardofAppeals (PAB)
Subject: Re: Objection to proposed cell site at 1509 Shrader St.

Thanks so much. You must be a supermom, you were the fastest email yet!
B

On Nov 8, 2018, at 3:12 PM, Sonya Abrams <sonya.abrams@gmail.com> wrote:

Dear Board of Appeals members

We are residents of upper Shrader Street at 1560 Shrader Street. We purchased and moved into our new home as of one year ago, selecting this location particularly for the beauty of upper Cole Valley. We are upset by the proposed installation of the cell site at 1509 Shrader St. We were not notified about the cell site nor did we see any notifications about the cell site. We feel it raises concerns about safety and we are worried it would negatively impact the property values in our neighborhood.

As parents of 3 small children, we are particularly concerned with the seemingly duplicitous way in which this cell site is being pushed through in a neighborhood with many young families as well as the lack of information regarding it. We urge you to reconsider the installation of the cell site.

Thank you.

Sonya Abrams

1560 Shrader St.

4153172844

Longaway, Alec (BOA)

From: S.M <sanish@gmail.com>
Sent: Thursday, November 8, 2018 4:28 PM
To: BoardofAppeals (PAB)
Subject: Appeal #18-130 – 1509 Shrader Letter of Support

Dear San Francisco Board of Appeals,

I am the homeowner at 1526 Shrader Street. I am writing to convey my strong objection to the Department of Public Works granting Permit 18WR-0033 for a new cell site on our side street and to ask that the Board of Appeals please deny it.

I have been informed of this proposal via my neighbors and have not received the official notice. I do not support construction of a large cell on a residential utility-free side street like ours.

Sincerely
Sanish Mondkar
1526 Shrader Street
San Francisco

Sent via Superhuman

8 November 2018

Dear San Francisco Board of Appeals members,

I am writing regarding Application No. 18WR-0033, submitted by Mobilite, LLC for a Personal Wireless Service Facility Site Permit in front of 1509 Shrader Street, and the associated Appeal number 18-130.

I respectfully request that you deny the Permit for installation at this proposed location.

I am the homeowner of 1516 Shrader St, located directly across Shrader Street from the proposed location. I am a Civil Engineer, registered in the State of California (PE Number C39768), a mother of two daughters, a cell phone user, and have been a resident of this neighborhood for over 25 years.

I have two primary objections to the installation of the proposed Wireless Service Facility (Facility):

- Installation of a new, taller pole, and
- Inappropriate location

We received notice dated 5/25/2018 which stated that Application No. 18WR-0033 submitted by Mobilities for the Facility was tentatively approved based on listed conditions. San Francisco Public Works Condition No. 2 states that their approval includes the condition that "...no new poles shall be erected or placed in underground districts." The photographs attached to 5/28/18 notice of the existing light pole and the proposed Facilities appear consistent with this condition in that they depict the proposed Mobilitie installation as if it is simply attached to the existing light pole.
It is clear now that this is not the case, but in fact, **Mobilitie intends to install a new, taller, street light pole and associated foundation.**

The proposed wireless communication Facility (the Facility) includes a nearly 5 ½ foot tall enclosure as well as a radio unit, UE relay antenna and appurtenant accessory equipment inside a secondary three-foot tall enclosure. Locating such a Facility at this location is not appropriate. Shrader Street is an underground utility district. 1509 Shader Street is in the middle of a residential side-street. It appears that most of the other 33 locations noted in the Hammett & Edison Noise Study dated 3 November 2017 are located in commercial or mixed-use areas, are on heavily trafficked streets, or are located at intersections. 17th Street, for example seems the more appropriate location.

Thank you for evaluating this matter afresh, from the perspective of the residents. We feel we were misled on the impacts of this Facility to our street and homes, and appreciate your careful consideration of the appeal.

Elizabeth McDonald

Longaway, Alec (BOA)

From: Brigitte & Hemang <brigittehemang10@gmail.com>
Sent: Thursday, November 8, 2018 12:17 PM
To: BoardofAppeals (PAB)
Cc: briandsedar@gmail.com
Subject: Appeal of Cell Site at 1509 Shrader

This message is from outside the City email system. Do not open links or attachments from untrusted sources.

BOARD OF APPEALS
NOV 08 2018
APPEAL # 18-130

Download full resolution images
Available until Dec 8, 2018

Dear Board of Appeal Members,

I filmed the attached video of the entire 1500 block of Shrader Street & took the accompanying pictures of the pole at 1509 Shrader on June 13th 2018. Our bedroom is just 45 feet away at 4901-4903 17th Street. As you can see there were NO notices posted on any of the 4 light poles or 8 other public signposts on the affected block in the middle of the 20 day period residents were supposed to be allowed to review this information. Moreover, I went on many walks with my baby around the neighborhood during this time period in June and specifically looked for signage on Shrader, 17th and Carmel Streets. I did not see a single sign during that time period.

When we wrote formally to SF Department of Public Works on July 9th (for their Public Hearing) about the above and in particular our concerns of impact to our property value, our largest single investment, we did not know that a new, even higher light pole is to be installed at this location. Our July 9th letter mentioned a 31' cell tower and we understand that this is now 33' in height. We were never informed of this until our neighbors' group did a formal Records Request from the City. The Notice specifically assured us that no new poles would be installed or placed in our area, which has underground utilities. Now we found out that the pole is being replaced, and Mobilitie has the plans to place TWO antennae instead of one. As the pole and cell site grow, so do our concerns.

It is very disturbing as San Francisco residents with a young family to have been so poorly informed and now in fact deliberately misled by this process. We are upset and ask that the Board of Appeals please deny this fraudulently obtained Permit.

Regards,
Brigitte Bogert & Hemang Kapasi
4901 17th Street

Click to Download

IMG_0912.MOV
0 bytes

Longaway, Alec (BOA)

From: Centoni Gina <gina@centoni.com>
Sent: Thursday, November 8, 2018 5:25 PM
To: Brown, Vallie (BOS)
Cc: BoardofAppeals (PAB); briandsedar@gmail.com
Subject: Re: Cell Site - Board of Appeals - Cole Valley

Thank you Vallie for your attention to this manner. We look forward to a community supported effort that is in keeping with the spirit and needs of those living, working and supporting the Cole Valley community.

Regards,

Gina

On Nov 8, 2018, at 5:17 PM, Brown, Vallie (BOS) <vallie.brown@sfgov.org> wrote:

Thank you for your feedback Gina

Sent from my iPhone

On Nov 8, 2018, at 5:01 PM, Centoni Gina <gina@centoni.com> wrote:

Dear Supervisor Brown

With regret, professional commitments will keep me from the Board of Appeals hearing on Wednesday, November 14th. In lieu of my appearance at the hearing, I wish to express my concern for what appears to be a poorly organized infrastructure modification to our Cole Valley neighborhood.

The Sedar Family has informed our community of the "approved" communication equipment scheduled for installation on Shrader Street. I am very concerned about this project at many levels. Please see below:

1. DPW communication and outreach has not sufficiently reach all those impacted. This is an active neighborhood, where many of us will pass this equipment daily. The standard 311 Notification of 150' does not adequately inform those impacted. If not for the Sedar's community effort, many, many families would be tragically unaware.

2. The health concerns for those passing by this equipment has been distributed in an insufficient manner. Additionally, the information appears to be conflicting and not in keeping with the regulations to protect health concerns afforded to City of San Francisco employees.

3. This project appears to benefit a private, for profit, organization at the cost of our community. A clear definition of who this equipment actually benefit is sorely missing.

I hope these concerns, as well as the many others presented by the Sader's, are addressed before the project is allowed to proceed.

Regards,

Gina Centoni
1550 Shrader Street
San Francisco, CA 94117
415-606-6176

Centoni
Restoration and Development, Inc.
230 Broderick Street
San Francisco, CA 94117

C: 415-606-6176
O: 415-829-3111

Mejia, Xiomara (BOA)

From: Brian Sedar <briandsedar@gmail.com>
Sent: Thursday, November 8, 2018 5:01 PM
To: BoardofAppeals (PAB)
Cc: Cantara, Gary (BOA)
Subject: Letter of Support (dictated) - 1509 Shrader Appeal #18-130

Dictated by Pearle Wong, Age 96 November 8th, 2018
1555 Shrader Street
San Francisco, CA 94117
(Pearle has no email and has some difficulty reading/writing herself)

For the Members of the Board of Appeals,

"My husband and I built our home in 1952 so I have seen a lot of change in the City. I am 96 now, but my children used to play in the street with important San Francisco families who lived on our street. They are all gone but there are new families with children down the hill from me.

My husband and I watched some things improve. All the wires were buried and the old wooden poles were taken off our street. I don't have the records, but I know this was a lot of work and it wasn't cheap. It cost a lot of money to make these changes to improve our street and we are proud of that.

My neighbors showed me how the Department of Public Works wants to put the new metal pole right next to their families, that is higher so that it can hold a cell tower with a great big box on it.

That's ugly and we don't want it wrecking our views. The neighbors had to ask for records from the Cellular Company that showed a new and taller pole than they were told about. That's just not right. I still see a wooden pole streetlight at the end of our block on 17th Street so why the City doesn't tackle that first is a mystery to me.

I still do volunteer work to feed the Homeless at All Saints in the Haight and Wednesday is my day to volunteer so I cannot come to your Hearing. But I'm thankful that I can still do what I can do.

I hope the Board does the right thing next Wednesday. This Permit is wrong."

Pearle Wong

Mejia, Xiomara (BOA)

From: lara edelbaum sunshine <ledelbaum@gmail.com>
Sent: Thursday, November 8, 2018 6:08 PM
To: BoardofAppeals (PAB)
Subject: Complaint about new cell tower in Cole Valley

BOARD OF APPEALS
NOV 09 2018
APPEAL # 18-130

This message is from outside the City email system. Do not open links or attachments from untrusted sources.

Lara and Paul Sunshine
1567 Shrader Street
San Francisco, CA 94117

San Francisco Board of Appeals
1650 Mission Street, Suite 303
San Francisco, CA 94103

Dear Members of the Board of Appeals,

We are homeowners at 1567 Shrader Street with young children. We purchased our home because it was a safe place for our kids to grow up on a picturesque, utility-free street with breathtaking historic and residential views down a beautiful, gently sloped street.

We are upset that the Department of Public Works is allowing a cellular company to place a new, taller pole well off the main 17th Street thoroughfare and up onto our wholly residential side street. We know why a Cellular Company would covet a higher point, but we are even more upset that in the Notice they provided to a few residents down the street, they did not even begin to disclose what they were doing, and our process to provide feedback and objection has been seriously compromised.

The Notice misled us. It said the cellsite "shall not obstruct the view of any adjacent residential window". Neighbors whose residential views were directly obstructed were only told later at the DPW Hearing –rushed into the Monday right after the 4th of July weekend (think how hard that was for families to prepare for)-- that "private views shall not be considered". Only views from "public right of ways and views of historic buildings and parks" would be considered. This is an absurdity. DPW may not consider our Shrader Street views "Excellent". But the SF General Plan and Mobilitie certainly do!

We are attaching just three photos to show you that our views are not only privately beautiful, they are just as spectacular from outside, on our small-off main thoroughfare residential street, as well as the sidewalks our children play on.

A new 7 foot taller tower –obviously raised higher for the benefit of the cellular company's ability to maximize their view—will indeed obstruct views from outside and inside our (and other) home(s). And it will definitely obstruct the view of historic structures like St Ignatius and Lone Mountain College.

The Notice misled us the way it was photographed. We are one half mile north of Sutro Tower and over one tenth of a mile east of it. We would not buy a home for small children with Sutro Tower directly over us as Mobilitie's weird photo angle tried to suggest This was wholly deceptive, to make it appear "What's a small new cell-tower compared to that even larger one".

It should be no surprise that 112 of us, our entire neighborhodd signed the Petition to reject the Permit. But Department of Works has obviously not only misled us, they ignored us and gave Final Approval anyway -- no changes.

Our hope is that the Board of Appeals will take the time to recognize just how poorly notified and misled neighbors were and deny the permit for this particular location. We're not opposed to 5G small cellsites on existing poles, but they need to be small, on existing poles, and importantly on main through streets, or better yet commercial streets, certainly not in a residential neighborhood of this quality and affecting our small children's quality of life.

Sincerely,
Lara & Paul Sunshine

HD 11/14/18

FILE

Longaway, Alec (BOA)

From:	Brigitte & Hemang <brigittehemang10@gmail.com>
Sent:	Thursday, November 8, 2018 12:17 PM
To:	BoardofAppeals (PAB)
Cc:	briandsedar@gmail.com
Subject:	Appeal of Cell Site at 1509 Shrader

This message is from outside the City email system. Do not open links or attachments from untrusted sources.

BOARD OF APPEALS
NOV 08 2018
APPEAL # 18-130

Dear Board of Appeal Members,

I filmed the attached video of the entire 1500 block of Shrader Street & took the accompanying pictures of the pole at 1509 Shrader on June 13th 2018. Our bedroom is just 45 feet away at 4901-4903 17th Street. As you can see there were NO notices posted on any of the 4 light poles or 8 other public signposts on the affected block in the middle of the 20 day period residents were supposed to be allowed to review this information. Moreover, I went on many walks with my baby around the neighborhood during this time period in June and specifically looked for signage on Shrader, 17th and Carmel Streets. I did not see a single sign during that time period.

When we wrote formally to SF Department of Public Works on July 9th (for their Public Hearing) about the above and in particular our concerns of impact to our property value, our largest single investment, we did not know that a new, even higher light pole is to be installed at this location. Our July 9th letter mentioned a 31' cell tower and we understand that this is now 33' in height. We were never informed of this until our neighbors' group did a formal Records Request from the City. The Notice specifically assured us that no new poles would be installed or placed in our area, which has underground utilities. Now we found out that the pole is being replaced, and Mobilitie has the plans to place TWO antennae instead of one. As the pole and cell site grow, so do our concerns.

It is very disturbing as San Francisco residents with a young family to have been so poorly informed and now in fact deliberately misled by this process. We are upset and ask that the Board of Appeals please deny this fraudulently obtained Permit.

Regards,
Brigitte Bogert & Hemang Kapasi
4901 17th Street

Click to Download